This is a digital copy of a book that was preserved for generations on library shelves before it was carefully scanned by Google as part of a project to make the world's books discoverable online.

It has survived long enough for the copyright to expire and the book to enter the public domain. A public domain book is one that was never subject to copyright or whose legal copyright term has expired. Whether a book is in the public domain may vary country to country. Public domain books are our gateways to the past, representing a wealth of history, culture and knowledge that's often difficult to discover.

Marks, notations and other marginalia present in the original volume will appear in this file - a reminder of this book's long journey from the publisher to a library and finally to you.

Usage guidelines

Google is proud to partner with libraries to digitize public domain materials and make them widely accessible. Public domain books belong to the public and we are merely their custodians. Nevertheless, this work is expensive, so in order to keep providing this resource, we have taken steps to prevent abuse by commercial parties, including placing technical restrictions on automated querying.

We also ask that you:

+ *Make non-commercial use of the files* We designed Google Book Search for use by individuals, and we request that you use these files for personal, non-commercial purposes.

+ *Refrain from automated querying* Do not send automated queries of any sort to Google's system: If you are conducting research on machine translation, optical character recognition or other areas where access to a large amount of text is helpful, please contact us. We encourage the use of public domain materials for these purposes and may be able to help.

+ *Maintain attribution* The Google "watermark" you see on each file is essential for informing people about this project and helping them find additional materials through Google Book Search. Please do not remove it.

+ *Keep it legal* Whatever your use, remember that you are responsible for ensuring that what you are doing is legal. Do not assume that just because we believe a book is in the public domain for users in the United States, that the work is also in the public domain for users in other countries. Whether a book is still in copyright varies from country to country, and we can't offer guidance on whether any specific use of any specific book is allowed. Please do not assume that a book's appearance in Google Book Search means it can be used in any manner anywhere in the world. Copyright infringement liability can be quite severe.

About Google Book Search

Google's mission is to organize the world's information and to make it universally accessible and useful. Google Book Search helps readers discover the world's books while helping authors and publishers reach new audiences. You can search through the full text of this book on the web at `http://books.google.com/`

HW 1VZG P

Digitized by Google

30 KE 2670

F. Lowell Kennedy.

Jan. 1905.

Digitized by Google

Digitized by Google

Digitized by Google

375

A TEXT-BOOK

OF

Mechanical Engineering.

Digitized by Google

Digitized by Google

Digitized by Google

Digitized by Google

L. M.

A TEXT-BOOK

OF

Mechanical Engineering

BY

WILFRID J. LINEHAM, M.INST.C.E., M.I.MECH.E.

HEAD OF THE ENGINEERING DEPARTMENT
AT THE GOLDSMITHS' COMPANY'S INSTITUTE, NEW CROSS;
LATE PROFESSOR OF ENGINEERING AT THE SCHOOL OF SCIENCE AND ART
AND TECHNICAL COLLEGE, NEWCASTLE-ON-TYNE;
MEMBER OF THE NORTH-EAST COAST INSTITUTE OF ENGINEERS AND
SHIP-BUILDERS; THE SOCIETY OF ARTS, &C., &C.

PART I.—WORKSHOP PRACTICE.

PART II.—THEORY AND EXAMPLES.

FIFTH EDITION, REVISED AND ENLARGED.

LONDON: CHAPMAN AND HALL, LIMITED,
AGENTS TO THE SCIENCE AND ART DEPARTMENT.
1902.

ALL RIGHTS RESERVED.

Digitized by Google

KE 2690

BERNARD COLLEGE
1940
LIBRARY

Engineering Library

LONDON:
Printed by STRANGEWAYS & SONS, Tower Street,
Cambridge Circus, W.C.

Digitized by Google

TO MY WIFE,

WHO INSPIRED ITS CONCEPTION,

AND HAS ALWAYS FAITHFULLY AND PATIENTLY

AIDED AND ENCOURAGED

ITS PRODUCTION,

THIS BOOK

IS AFFECTIONATELY DEDICATED.

Digitized by Google

Digitized by Google

PREFACE.

IT is now many years since the initiative of the City and Guilds of London Institute, in providing an examination for Mechanical Engineers, first suggested to me the desirability of writing the present text-book. In preparing students for this examination, I was being constantly asked for a comprehensive work which would at least show them the general lines on which their study, as engineer apprentices, should proceed; and, in seeking to meet their request, I had to consider seriously (1) whether the whole theory and practice of Mechanical Engineering, or even a *précis* of it, could be compressed into one volume, and (2) whether it was desirable so to compress it. That this work has here been written is sufficient evidence of my own solution of the above questions—a solution which has been fully confirmed by the successful use, in teaching engineer students, of my chapters during the years of their preparation. I am perfectly aware that there are many who will object to any attempt to convey the *rationale* of practical processes by description on paper; others may accuse me of 'cramming,' by attempting to condense the theories of engineering into half a volume. I would earnestly ask all these gentlemen, before condemning what may seem to them a too ambitious undertaking, to first consider carefully the following reasons which appeared to me to support my decision:—(1) The saving of time to the student, who need not now be always 'beginning at the

Digitized by Google

beginning,' the disadvantage of having to use a series of small text-books; (2) saving of space, reference being made when necessary to previous pages, obviating much needless repetition: and here it may also be noticed that in a single volume, embracing so vast a subject, 'padding' had of necessity to be *nil;* (3) the examples of great and successful writers—to wit, Rankine, Ganot, Deschanel, and others; (4) the fact that practical processes are now constantly described, with good result, both in the engineering journals and in the City Guilds' examination answers.

I shall now explain the order of the chapters and my reasons for their arrangement.

Part I. makes the tour of the shops, with the intention of initiating the student into their mysteries. The usual method is to first describe the tools, after that the general processes, and then a series of graduated examples of their application. A separate chapter is reserved for Machine Tools. In the chapter on Fitting and Erecting, I found much difficulty in selecting suitable examples, the work being greatly interwoven. I therefore decided on the plan of describing the construction of a horizontal engine, thus including most of the principal difficulties. Similarly, in the Boiler chapter, I have considered in detail the setting-out and building of a Marine Boiler. I am conscious that Part I. is far from exhaustive, but the general method of first taking the castings and forgings, and then following the work through the shops to its completion, seemed the proper course to pursue, and I hope will be endorsed.

In Part II. I have treated, I believe, of all the principal theories and investigations required by the engineering student. Some one has said that, when designing, the engineer uses about one part of calculation to six of judgment. No amount of book study can impart the latter most necessary quality: nothing but years of drawing-office practice can effectively supply it; but any book should be

Digitized by Google

welcomed which attempts to lay the demon of 'rule of thumb,' the autocrat of even my own apprentice days. To encourage exactitude and prevent one source of error in the application of formulæ, I commence with a 'synopsis of lettering,' and have here introduced what I believe to be much needed, the retention of a certain letter wherever possible solely for one purpose. Though this was not always entirely practicable, I yet venture to think that some improvement has been effected. It is unfortunate, for example, that *f* stands both for stress and acceleration; but at least it need not be adopted both for tons and pounds. I have, therefore, employed it for tons only. Again, velocity per minute and per second are better separately distinguished, as in the text, by the letters V and *v* respectively.

While never introducing mathematics unnecessarily, I have stated all the 'steps' that space permitted in such mathematics as have been introduced, and the latter will be found of but an elementary character, involving only simple equations, fractions, and the use of tables of sines and logarithms. The substitution of graphic treatment for the higher mathematics in many cases will, I think, be appreciated by most students.

As regards the order of Part II., the Strength of Materials without doubt comes first, to be followed by Energy and Kinematics; these all assist in the treatment of Prime Movers worked by gases or liquids. With the knowledge acquired from Part I. and his own experience in the workshop, supplemented by the theory of Part II., the student should be able to commence the study of original design, for he is now in acquaintance both with what theory directs and the workshop restricts.

Regarding illustrations, I commenced with the intention of admitting no highly-shaded perspective views, which, showing nothing of interior parts, are only calculated to

Digitized by Google

confuse the student. Elaborate drawings, of course, necessitated great labour on my part, as well as considerable co-operation from makers and the editors of engineering journals. Such aid has in every case been afforded most ungrudgingly, and in many cases has exceeded my most sanguine hopes, both as regards drawings and matter. The necessity of well-detailed, modern examples, has always been present to me, and I confidently believe that such have been supplied. In connection with these, I would ask the reader to unite with me in thanking the following firms and gentlemen who have so kindly helped:

Messrs. the Britannia Company, Colchester.
„ George Booth & Co., Halifax.
„ Joshua Buckton & Co., Leeds.
Mr. John Cochrane, Barrhead, N.B.
Mons. Delamare-Debouteville, Rouen.
Messrs. the East Ferry Road Engineering Works Company, Millwall.
The Editors of *Engineering*, London.
Messrs. Greenwood & Batley, Leeds.
„ Andrew Handyside & Co., Derby.
„ Hulse & Co., Manchester.
„ B. & S. Massey, Manchester.
„ Priestman Bros., Hull.
„ David Rollo & Sons, Liverpool.
„ Samuelson & Co., Banbury.
„ Selig, Sonnenthal & Co., London.
„ James Simpson & Co., Pimlico.
„ Smith, Beacock, and Tannett, Leeds.
„ Smith & Coventry, Manchester.
„ the Sturtevant Blower Company, Boston, U.S.A., and London.
„ Tangyes Limited, Birmingham.
Mr. Ralph H. Tweddell, Westminster.

Digitized by Google

Sir J. Whitworth & Co., Manchester.
Mr. Wilson Worsdell, of the N.E. Railway.

I have also to thank my assistants at the Goldsmiths' Institute, Mr. William Ashton and Mr. George T. White, for much valuable aid in the correction of proofs, and Mr. R. W. Weekes for assistance in the matter of electric transmission.

In conclusion, it is my sincere wish that the book may prove of real benefit to engineers of every class. In furtherance of this, I will gladly explain any portion that may seem abstruse, and shall be greatly obliged by having any errors pointed out. I must finally state that I do not intend the work to be merely an aid to any particular examination, but I have introduced whatever seemed to me most helpful to those for whom it has been prepared.

WILFRID J. LINEHAM.

Goldsmiths' Institute, New Cross, S.E.
October, 1894.

Digitized by Google

PREFACE TO THE SECOND EDITION.

THE demand for a Second Edition of this book occurring so soon, the First Edition having been exhausted within a few months of publication, I have only had opportunity to make the usual corrections, and to add the more necessary extensions in an Appendix.

Speaking generally, I am highly gratified at the reception which has been accorded to the work, especially considering the imperfections of its First Edition, and here take occasion to sincerely thank correspondents and reviewers both for praise and for help.

As there has been some little misunderstanding in the reading of my first preface, let me at once say that the only examination I had in view when preparing the book was that which is the best examination for the engineer, 'his actual requirements in doing the world's work.'

Once more I earnestly solicit corrections and suggestions, renewing at the same time my offer to explain any difficult portion.

WILFRID J. LINEHAM.

Goldsmiths' Institute
October, 1895.

Digitized by Google

PREFACE TO THE THIRD EDITION.

IN this edition some corrections and considerable additions have been made, with the desire of satisfactorily filling gaps and keeping the work abreast of modern methods.

The drawing and description of Whitworth's Fluid-Steel process, p. 790, are taken from the proceedings of the Inst. of Civil Engineers, with the kind permission of the Council, and of Mr. W. H. Greenwood, M.I.C.E., the author. I am similarly indebted to the Inst. of Mechanical Engineers for a short account of the experiments of their Research Committee on Friction, p. 870. The matter on Graphical Calculus and n^{th} Moments, pp. 846–7 and 851–2, I owe to Prof. Karl Pearson, F.R.S.; and the experiments on Machine Efficiency, pp. 873–4, on High-speed Friction, p. 869, and on Mechanical Hysteresis, p. 837, were made at University College, with the kind assistance and supervision of Prof. T. Hudson Beare, B.Sc., M.I.C.E. The formulæ for thick cylinders, applied to ordnance, are taken from the *Gunnery Manual;* and the investigation of Air-compression Efficiency, p. 880, though slightly changed, is originally due to Prof. W. W. F. Pullen, Wh. Sc., from whom I received it. The drawing and description of Mr. J. H. Gibson's Worm-wheel Cutting Machine, p. 824, I received from that gentleman; the liquid-fuel illustrations, on p. 907, from Mr. R. Wallis, Wh.Sc.; and Mr. W. H. Pretty, Wh. Sc., has supplied much first-hand workshop information. Others have kindly corrected errors or suggested improvements. To these, and to all the before-mentioned authorities, I tender my most hearty thanks.

If there is any borrowed matter of importance, the source of which I ought to have stated, I shall feel grateful to have it pointed out to me.

WILFRID J. LINEHAM.

Goldsmiths' Institute,
August, 1898.

Digitized by Google

PREFACE TO THE FOURTH EDITION.

THIRTY-ONE pages have been added in the form of a Third Appendix, dealing with matter that seemed of importance; and the whole book has been carefully re-read and corrected. The excellent and ready method of treating redundant members given on pp. 924–5 is due to Mr. Max am Ende, though obtained from Prof. Pullen's work on *Graphic Methods*, and here further simplified. Other sources of information have been acknowledged in the text.

WILFRID J. LINEHAM.

Goldsmiths' Institute,
January, 1900.

PREFACE TO THE FIFTH EDITION.

ANOTHER short Appendix has been added to bring the work up to date, and the general text has been thoroughly revised.

WILFRID J. LINEHAM.

Goldsmith's Institute,
October, 1901.

Digitized by Google

CONTENTS

PART I.—WORKSHOP PRACTICE.

CHAPTER I.

CASTING AND MOULDING.

	PAGE
Varieties of Cast Iron	1
The Cupola	2
Moulding Sand	4
Methods of Moulding	5
Examples in Greensand	6
Examples in Loam	14
Machine Moulding	31
Chilled Castings	34
Malleable Castings	36
Brass Founding	37
Mixtures	41

CHAPTER II.

PATTERN MAKING AND CASTING DESIGN.

Wood used	43
Pattern Building	49
Core Boxes and Prints	55
Wheel Patterns	58
Striking Boards	61
Contraction Allowance	62
Plate Moulding, Stopping-off, &c.	64
Crystallisation and Unequal Shrinkage	67

Digitized by Google

CHAPTER III.

METALLURGY AND PROPERTIES OF MATERIALS.

	PAGE
Chemical Elements	72
Cast and Wrought Iron	73
Steel	77
Bronzes and Brasses	84

CHAPTER IV.

SMITHING AND FORGING.

The Hearth	88
Blowers	90
Tools	93
Smaller Steam Hammer	97
Heating and Welding	100
Examples of Simple Forging	102
Examples of Heavy Forging and Stamping	117
Case-Hardening	124
Tempering	125
The Forge	129
Heavy Steam Hammer	129
Piled-up or Scrap Forgings	131
Heavy Steel Forging	133

CHAPTER V.

MACHINE TOOLS.

Classification	137
General Principles	138
Tool Angles	140
The Screw-cutting Lathe	141
Supporting and Driving Lathe Work	150
Chucks and Toolholders	153
The Break Lathe	157
The Boring Machine	160
Drilling Machines	163
The Planing Machine	169
The Shaping Machine	171
The Slotting Machine	173

Digitized by Google

PAGE
The Milling Machine 174
Milling Cutters 177
Machine Vice 182

CHAPTER VI.

MARKING-OFF, MACHINING, FITTING, AND ERECTING.

The Marker-off's Tools 183
The Fitter's Tools 186
Machinist's Requirements 195
Capstan Lathe 200
Erector's Tools 202
General Processes 209
Application to the parts of a Horizontal Engine . . 215
Regulator Gear 216
Valve Rods 226
Eccentrics 230
Slide Bars and Brackets 232
Crank Shaft Bearings 235
Crank Shaft 238
Connecting Rod 240
Crosshead and Piston 245
Governor Gear 249
Cylinder and Valves 257
Fly-wheel and Bed Plate. 262
Brass Work 264
Erecting the Engine 268
Sundry Notes 274

CHAPTER VII.

BOILER MAKING AND PLATE WORK.

Materials 279
Hand Tools and Hand Processes 283
Punching *v*, Drilling 287
Punching and Shearing Machines 289
Plate-edge Planing Machine 294
Bending Rolls 297
Flanging Presses 300
Drilling Machines 303
Hydraulic Riveting Machines 313

Digitized by Google

PAGE
Locomotive Boiler-shop 318
Marine Boiler-shop 319
Ship Yard 320
Pneumatic Caulker and other Tools 322
Electric Welding 327
Description of Boilers: Lancashire, Marine, Locomotive, Tubulous, and Vertical 330
Geometry 339
Setting-out a Marine Boiler 342
Riveting the Boiler. 348
Setting-out other Boilers 352

PART II.—THEORY AND EXAMPLES.

Synopsis of Lettering 358

CHAPTER VIII.

STRENGTH OF MATERIALS, STRUCTURES, AND MACHINE PARTS.

Stress, Strain, and Elasticity 361
Work Diagram 366
Stress due to Impulsive Load, and to Heat . . . 368
Testing Machines 369
Intensifier 375
Shackles for Specimens 378
Strain Measuring 381
Stress-strain Diagrams 385
Wöhler's Law and Factor of Safety 390
Table of Stresses for Different Materials . . . 393
Classification of Stress-action 394
Tension Stress-action:—
Ropes, Pipes and Cylinders, Flywheel, Bolts, &c. . 395
Compressive Stress-action 404
Shear Stress-action:—
Suspension Link, Riveted Joints, Cotter Joint, Shafts, Coupling Bolts, Keys, Springs . . 405

Digitized by Google

PAGE
Bending Stress-action and Theory of Beams:— . . 427
Neutral Axis and Moment of Resistance . . 428
Bending Moment and Shear 437
Theorem of Three Moments 445
Examples of Beams 446
Deflection of Beams 450
Combined Bending and Tension Stress-action . . 453
Combined Bending and Compressive Stress-action . 455
Pillars and Struts 456
Furnace Tubes 460
Combined Torsion and Bending 461
Combined Torsion and Compression 463
Framed Structures 463

CHAPTER IX.

On Energy, and the Transmission of Power to Machines.

Force, Mass, Velocity, and Momentum 473
Energy Forms: Conservation, and Transformation . 476
Transmitters of Power 479
Simple Machines 480
Kinematics: Lower Pairing 485
The Slider Crank Chain 486
The Quadric Crank Chain 487
Higher Pairing 488
Velocity and Acceleration Curves 491
Link Work 496
Shafting, Bearings, &c. 501
Spur Gearing 509
Bevel Gearing. 519
Worm and Screw Gearing 520
Epicyclic Trains 521
Belt Gearing 526
Cotton-rope Gearing 534
Wire-rope Gearing 539
Pitch-chain Gearing 544
Compressed-air Transmission 545
Hydraulic Transmission 549
Electric Transmission 549
Friction and Work Lost 555
Friction Gearing 571

Digitized by Google

PAGE
Dynamometers 575
Efficiencies of Machines. 577
Comparison of Transmitters 577

CHAPTER X.

On Heat and Heat Engines.

Dynamical Theory of Heat 581
Transfer of Heat 581
Measurement of Heat 584
Expansion of Gases 587
Latent Heat 591
Saturated and Superheated Steam. 595
Mechanical Equivalent of Heat 599
Internal and External Work 600
Specific Heats of a Gas 602
Isothermals and Adiabatics 605
Carnot's Engine and Reversible Cycle 608
Losses in Steam Engines 613
Expansion in Cylinder 615
The Indicator and Indicator Diagrams 616
Multiple-stage Expansion 621
Combination of Indicator Cards 622
General Idea of various Steam Engines. . . . 627
Distribution of Steam: by Cataract 634
" " by Eccentric 636
" " by Link Motion. . . . 640
" " by Radial Gear. . . . 642
Governors . . . . . 647 & 655
Variable Expansion-Gear 650
Automatic Expansion-Gear 654
Trip Gears 656
Zeuner's Valve Diagram. 660
Ideal Indicator Diagrams for Compound Engines. . 666
Correction of Indicator Diagram for Inertia . . . 673
Curves of Crank Effort 676
Weight of Fly-wheel 679
Horizontal Compound Engine 681
Triple Expansion Marine Engine 685
Condensers 686
Marine Details 688
Compound Locomotive 689

Digitized by Google

PAGE
Tractive Force 693
Boiler Fittings 693
Combustion and Forced Draught 696
The Gas Engine 699
Petroleum Engines 705

CHAPTER XI.

HYDRAULICS AND HYDRAULIC MACHINES.

Head, Pressure, and Velocity Energy 710
The Jet Pump. 711
Discharge of Water from Orifices 711
Measurement of Stream Horse-Power by Gauge Notches 714
Friction in Pipes, and Virtual Slope . . . 715
Loss by Shock 716
Principle of Momentum applied to Water Wheels. . 717
Water Wheels 720
Turbines. 723
The Centrifugal Pump 728
The Impulse Ram 729
Piston Pumps. 730
The Pulsometer 735
The Hydraulic Press 735
The Accumulator and Hydraulic Transmission . . 736
Hydraulic Lifts: and Intensifiers . . . 738
Hydraulic Cranes 740
Hydraulic Pressure Engines 742

APPENDIX I. (to Second Edition) 747

APPENDIX II. (to Third Edition) 779

APPENDIX III. (to Fourth Edition) 917

APPENDIX IV. (to Fifth Edition) 949

Digitized by Google

LIST OF PLATES.

PLATE			PAGE
I.	Arrangement of an Engineer's Smithy . .	*back to*	90–1
II.	10 cwt. Steam Hammer	*face*	98
III.	Steel-tempering Diagram	*face*	126
IV.	5 tons Steam Hammer	*face*	130
V.	10 ins. Centres Screw-cutting Gap Lathe .	*face*	150
VI.	Treble-geared, Screw-cutting Break Lathe .	*face*	160
VII.	Boring Machine and Engine Combined . .	*face*	162
VIII.	Double-geared Drilling Machine . . .	*face*	164
IX.	Planing Machine	*face*	170
X.	12 ins. Stroke Shaping Machine . . .	*back to*	172–3
XI.	Slotting Machine	*face*	174
XII.	Universal Milling Machine	*face*	180
XIII.	Drilling Machine for Marine Boiler Shells .	*back to*	310–11
XIV.	Multiple Drilling Machine	*face*	312
XV.	Hydraulic Machine Tools for Locomotive Boiler Work	*face*	318
XVI.	Hydraulic Machine Tools for Marine Boiler Work	*face*	320
XVII.	Triple-expansion Marine Engines . . .	*face*	686
XVIII.	Compound Express Locomotive . . .	*face*	692

Digitized by Google

PART I.

Digitized by Google

Digitized by Google

MECHANICAL ENGINEERING.

PART I.—WORKSHOP PRACTICE.

CHAPTER I.

CASTING AND MOULDING.

UP to the time of Watt, and even later, a very great deal of wood was used in engineering structures, even to the extent of steam pipes, but as fluid pressures became higher, other materials were sought, and cast iron was the first to recommend itself.

Cast Iron is the most crude form of the metal, and is obtained direct from the blast furnace by the fusing of the ore with some flux, which varies according to the nature of the particular ore, sometimes requiring clay, but in this country usually lime. The molten iron runs down into channels or *pigs* and is then called *pig iron*, while the slag is withdrawn separately.

Of the pig iron thus formed there are eight commercial varieties, according to the quality of the ore and the blast used; thus, increase of blast and diminution of fuel gives a whiter iron.

Commercial numbers.

8, 7, 6, 5 — **White** (silvery, hard, and strong), for conversion into wrought iron.

4 — **Mottled.** Strong foundry iron.

3, 2, 1 — **Grey** (soft and weak) for ornamental castings.

Digitized by Google

Most of the impurities disappear in the blast furnace, but carbon is absorbed from the coke fuel, and the presence of this carbon, *mechanically* mixed in the form of graphite, makes the iron more liquid when molten, but at the same time produces weakness in the casting. There is never more than five per cent. of uncombined carbon, while in the white iron there is almost none, it being *chemically* combined, and then actually increases the strength of the iron.

Table showing chemical composition of the three principal varieties of pig iron, in percentages:—

	Grey.	Mottled.	White.
Iron	90·24	89·3	89·86
Carbon (combined)	1·02	1·79	2·46
Graphite (uncombined)	2·64	1·11	·87
Silicon	3·06	2·17	1·12
Sulphur	1·14	1·48	2·52
Phosphorus	·93	1·17	·91
Manganese	·83	1·6	2·72
	99·86	98·62	100·46

The Cupola.—The pig iron is re-melted in the foundry in a kind of small blast furnace called a *Cupola*. The cupola is re-lit every day (and is therefore not so economical as a blast furnace, where the fire is never allowed to die out),* but this cannot be avoided on account of the intermittent demand made upon it.

Fig. 1 is such a cupola, where the pigs and coke are raised by the lift H L, hydraulic or otherwise, together with the man, who, after breaking each pig in three, puts them all in at the door D, charging as follows:—First, 7 cwts. of coke, next 1 ton of iron; then, alternately, 2 cwts. of coke and 1 ton of iron, until the cupola is filled to D. The blast enters at B, and the mouth M is stopped with luting clay. When all the iron is melted M is tapped, and the metal taken away in ladles to the moulds.

During re-melting the iron is again apt to absorb impurities from the fuel, such as oxides and silicates, the latter especially producing more brittle material, and rendering the iron cold-short, that is, easily snapped when cold. Formerly, re-melting was believed to be an improvement, and founders were advised to

* One blast furnace in the North of England, known to the writer, burned for over twelve years incessantly, and was then only blown out for repairs.

Digitized by Google

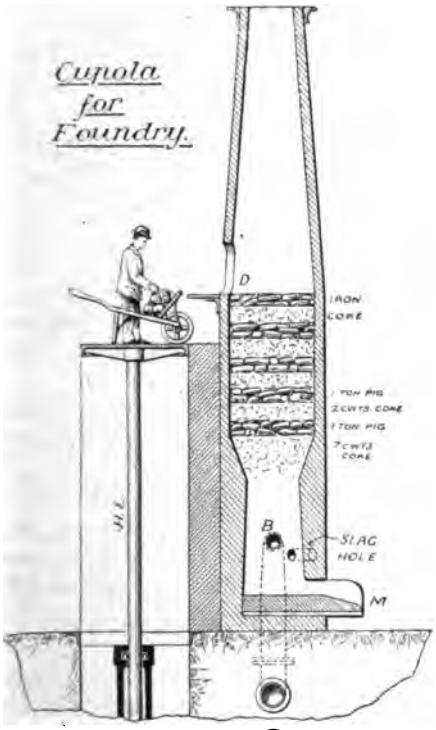

Fig. 1.

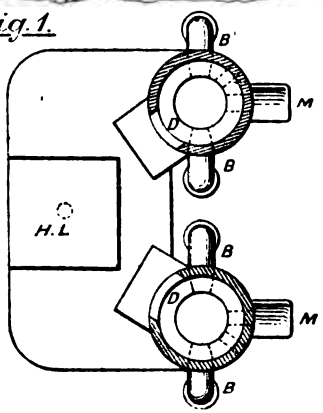

melt again and again, even to twelve or thirteen times, but this has now been demonstrated to be a fallacy. (*See Appendix II.*)

To obtain a very tough casting, such as an hydraulic cylinder, wrought iron turnings are sometimes mixed with the pig in the cupola.

Moulding.—We will now consider how the moulder forms his casting into any desired shape. To do this it is necessary in most cases to make a wooden pattern which shall be the counterpart of the casting required; for several reasons we shall see, however, that the pattern will not always be exactly similar to the casting. But more of this as we advance.

The pattern is impressed in sand contained in two moulding boxes, or flasks, about half the pattern in one box, and half in the other;

Digitized by Google

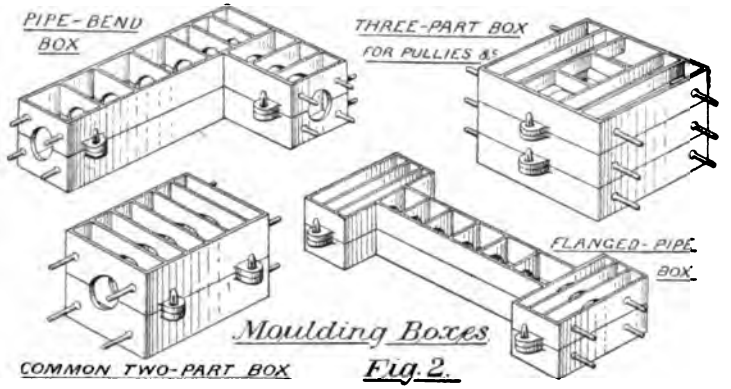

Moulding Boxes
Fig. 2.

these are sketched at Fig. 2. The boxes are light castings, ribbed across as shewn, allowing space for the escape of gas from the molten metal. (*See Appendix II.*)

Sand used in moulding is of two kinds, green sand and loam. **Green sand** is obtained from the chalk or coal measures, that of the London basin being among the best. Green sand should contain a large percentage of silica to give porosity, together with a very little magnesia and alumina for binding purposes. The lining of Bessemer converters has about 85 per cent. of silica in its composition, while many moulders prefer to have as much as 93 or 96 per cent. of silica, leaving only 4 or 7 per cent. of other substances. The sand should not burn on setting, or it will stick too much when wetted for use again, and, while cohesion is necessary, it should at the same time be porous enough to allow for the passage of air, though not so much as to permit of any molten metal entering it.

Loam is a mixture of clay (ferruginous or calcareous*) with a considerable amount of rock sand (abraded rock). It is ground in a mortar-mill and mixed with powdered charcoal, horse dung, cow hair, chaff, &c., to give it binding power and porosity.

Besides the above, **Cores** require a mixture of rock sand and sea sand (the latter for porosity), and **Parting Sand**, for the use implied by its name, consists of finely powdered blast-furnace cinder, brickdust, or fine dust from castings; all perfectly dry.

Moulding is practised by three different methods: *Green Sand*, *Dry Sand*, and *Loam Moulding*.

* With iron or lime respectively.

Digitized by Google

In green and dry sand moulding, patterns are generally used; but in loam moulding, which is only employed for objects of regular form, the mould is struck out by means of a template, and built up by the moulder himself.

Green Sand is the geological name of a sand of very fine texture. It appears black in the foundry because it is mixed with a proportion of coal and charcoal dust; it is damped each time that it is used. This is the most general method of moulding, with castings not likely to warp too much by the more rapid cooling. (*See Appendix II.*)

Dry Sand is a mixture of old loam with an addition of rock sand. It is so called because, after the pattern is moulded, the sand is dried by means of fires hung in pans or trays over the moulds. It is firmer and more suitable for the support of long castings, such as pipes, columns, and large fly-wheels than green sand is, and will produce finer castings, with less fear of pieces of sand being torn away by the flow of the metal. If pipes are moulded in green sand, the tendency is to uneven thickness in the castings, through sagging of the sand.

Fig. 3.
Loam work.

Loam Moulding, as we have said, does not require a pattern, the mould being struck in the pasty loam (the latter being mixed with water) by means of a rotating or sliding template, called a striking-board. Thus the core of a large cylinder is built up in brickwork, and then covered with a layer of loam, which is smoothed by a rotating striking-board (see Fig. 3), much as a plasterer would work the cornice of a house ceiling. Cubical moulds, such as those for condensers, may also be worked in loam.

The simplest moulding done in *green sand* is called **Open Sand Moulding**, and consists in laying the pattern in the sand on the foundry floor, withdrawing, and then pouring in the metal, a cover not being used. This is the method employed for such common objects as moulding boxes (see Fig. 4).

Digitized by Google

Fig. 4.

Opensand Moulding.

A Cattle Trough.—Our next example of moulding is an ordinary cattle trough, and here two boxes are used to hold the sand. The pattern may be of wood in the first instance, and of the same shape as the finished casting. It is placed in the bottom box, as in Figs. 5 and 6, and sand is filled in to the line P P, which is the parting. This parting is smoothed off, a dusting of parting sand applied, and, the top box being put on and fastened down, the whole is filled with sand and rammed well together. The top box must now be removed and the pattern taken away, a slight rapping being given to effect its detachment from the sand, while the latter is dusted with **Blackening**, which is oak charcoal dust. But first, to make the blackening adhere, pease-meal is sprinkled on the mould, absorbing the damp of the sand, and thus becoming a pasty layer. The object of the blackening is this: If the metal were to touch the side of the mould it would enter into the sand surface, and thus produce a rough casting. This is allowable in moulding boxes, where roughness is a decided advantage, but where a smooth casting is desired, blackening is needed, as it ignites on being touched by the metal, and so forms a film of gas between it and the mould, a clean casting being the result.

Gates.—The mould having been sleeked and finished, and any little break in the sand mended, the gates have now to be made for the entrance of the metal. Tapering plugs of wood are usually left in the sand for that purpose, and these are now removed.

The more shallow the casting, the more gates are used; as many even as four.

Vent Holes are made in the more solid parts of the sand (but not to touch the surface of the mould) to facilitate the passage of air from the latter.

The moulders, being provided with molten iron, taken from

Digitized by Google

the cupola in ladles, as already described, pour it simultaneously into the gates of the mould, and the sand being afterwards broken away, reveals the casting, which has filled the matrix left by the pattern.

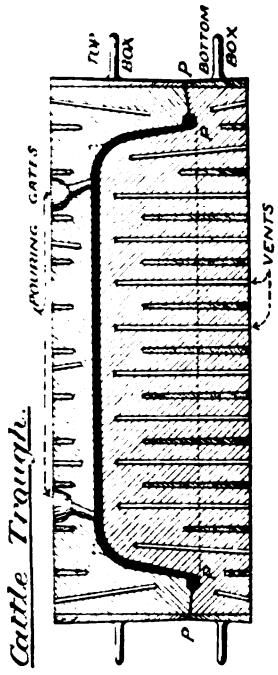

Fig. 6.

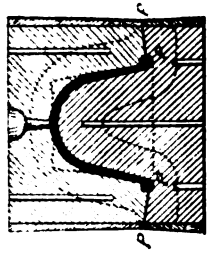

Fig. 5.

As regards the proper position in which to lay the pattern, a little thought is necessary, but as a general rule the most unimportant part of the casting should be upward, that being the part to which the scum and impurities rise. If possible, the scum should be entirely removed from the mould itself, being allowed to fill a large gate or projection. This is especially done in the case of steam cylinders, where purity is a necessity. Gates should be as central as possible, and have their mouths a little *higher* than the mould, but they should, as a rule, enter the latter low down, particularly in deep castings, in order that the air may be made to pass out at the vent holes: but much judgment has to be exercised; and in most cases they should be placed a little on one side, namely, not to enter on the top surface, otherwise the corners of the sand may be knocked off by the force of the flow; and finally, they should be put where shrinkage is likely to occur, that they may tend to fill up any shrinking portion.

Our next example shall be a **Hand Wheel** for a large stop

Digitized by Google

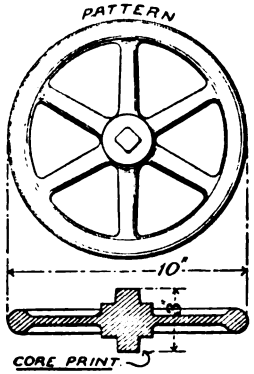

Fig. 7.

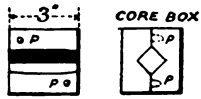

Fig. 8.

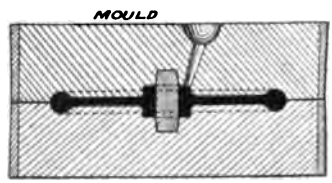

Fig. 9.

Hand Wheel.

valve. The pattern here will be of the same shape as the finished casting, excepting the square holes in the centre, which we will suppose to be cast in, to be afterwards dressed up with a rough file. Square core prints of any convenient length are put on either side of the boxes, and of a diameter equal to the hole to be cast, allowing a small amount for cleaning up (see pattern, Fig. 7).

A core box is now to be made, which is shown in Fig. 8, and consists of two blocks of wood, hollowed out in such a way as to represent the square hole required, and of a length equal to that across the core prints from end to end. The pattern is next placed in the sand, as drawn in Fig. 9, and parting made, then rammed up, with gate at G, and vents here and there. Core sand mixed with water is put in the core box (which fits together by means of the pegs PP), smoothed off, removed, and placed in the core stove to dry. The mould is finished and blackened, and the core treated with *black wash*, which is charcoal dust mixed with clay water, and used for the same purpose as blackening. The core being put in place, as shown in Fig. 9, everything is ready for the reception of the metal.

We shall now take the moulding of a **Chain Pulley**, by a very ingenious method. Fig. 10 represents the pattern, with core

Digitized by Google

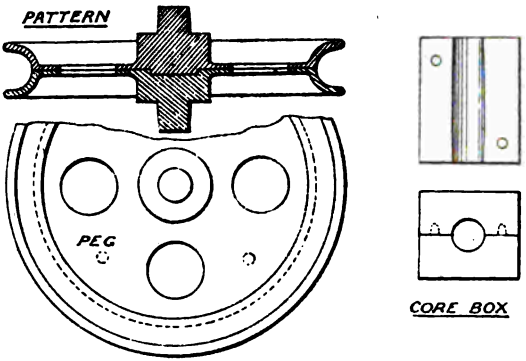

Chain Pulley. *Fig. 10.*

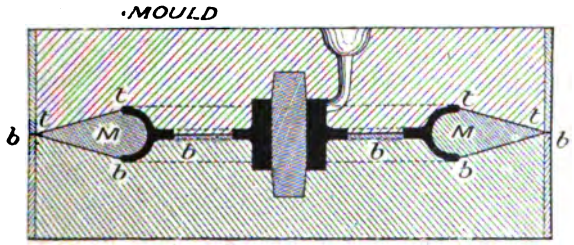

Fig. 11.

prints for the centre hole, and divided in halves by a horizontal plane. In all other respects it is the counterpart of the casting. The operation is as follows: referring to Fig. 11, we must first lay the bottom half of the pattern in the bottom box, and make the parting *b b*; next put in the top half of pattern, and make the parting *t t*; lastly, fill up the box, and ram well together. The pattern has now to be drawn out, and this is done by first lifting off top box, taking away the top half of pattern, and returning top box. Now, on turning the whole upside down, the bottom half of pattern becomes the top, and may be similarly released. The ring of sand M, it will be noticed, has all this time remained resting on that half which happened to be at the bottom. It is only necessary to make the core as in last example, put it in

Digitized by Google

place by removing top box, form gates and vents, and complete casting.

A Worm Wheel may have a pattern made in halves, and be moulded in an exactly similar manner (see Fig. 12); the teeth on

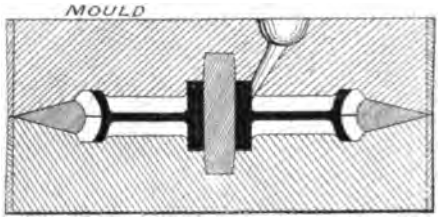

Fig. 12.
Worm Wheel

the pattern being formed so as to gear with a wrought iron worm which has been previously turned, the worm and wheel pattern being rigged up on two axles to imitate their condition when in actual work. In withdrawing the pattern from the sand a slight screw motion must be given to allow for the angle of the teeth.

Moulding boxes are entirely or to some extent dispensed with, and the floor of the foundry used for the reception of the pattern wherever convenient; and then, except in such cases as that shown in Fig. 4, a cope or slab of sand is used, contained in a box, to cover the impression. Examples of this kind of moulding, with more or less complicated copes, will now be treated.

Fig. 13 is the plan of a **Drilling Machine Table**. The pattern is of the same shape, with the exception of core prints necessary for the slot holes. A core box is required for these holes, and the whole is moulded face down, an extra piece being left in the casting at top, if thought necessary, to allow for scum. Instead of the bottom box the floor might have been used, if previously well vented with coke.

Perhaps the most ready way to mould the **Cylinder Cover** shown in Figs. 15 and 16 is to use three boxes (or what really comes

Digitized by Google

Fig. 14.

Fig. 13.

Drilling Machine Table.

Cover for Steam Cylinder.

Fig. 15.

Digitized by Google

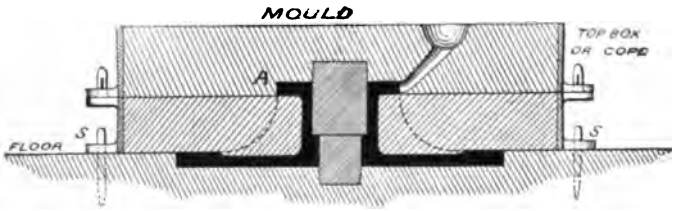

Fig. 16.

to the same thing, two boxes and the foundry floor), and make the flange A loose on the pattern. On taking off the top box, this flange may be withdrawn, while on replacing the top box, and lifting it and the bottom box together, the main pattern may then be removed. The core for the centre is inserted in the usual way, and the casting made in the position shown. The stakes S S fix the position of the boxes with regard to the floor. (*See Appendix II.*)

Casting on.—Sometimes it is necessary to attach cast iron to wrought iron in the mould itself, and so do away with the expense of bolts. *Casting on* is the term adopted for the operation resorted to.

As an example, we will take the traction engine **Road Wheel,** shown in section, Fig. 17.

A core box is made as in Fig. 18, consisting of a slab of wood A, with the boss B fastened to it, and of a hollow cylinder of wood C to contain the core sand. Two cores are thus formed and baked in the stove. A second core box is required, shown in Fig. 19, consisting, as before, of a hollow box to hold the core, and of the bosses D D in two parts, to make the impression for the central part of the wheel nave. As the line *x* in Fig. 18 corresponds to line *x* on Fig. 19, it will be seen that the prints P P in Fig. 18 will leave spaces for the reception of the spokes

It is only necessary to fix the spokes loosely in place by bolts to wheel-rim, at the same time laying them in the spaces left for them in the cores; build up according to Fig. 20; add a central core, E, made in ordinary core box; make gates, and cast. The spokes are afterwards riveted on wheel rim, and have the shape shewn in Fig. 21.

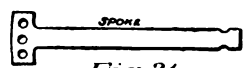

Fig. 21.

Digitized by Google

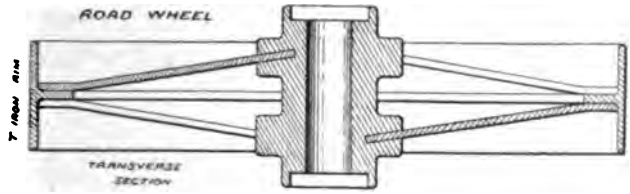

Fig. 17.

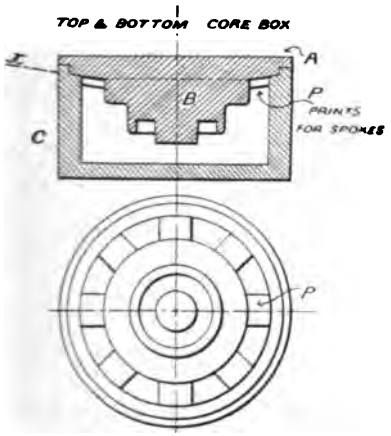

Fig. 18.

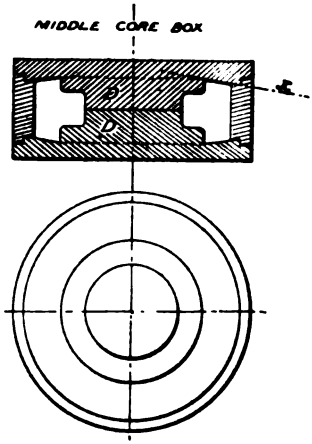

Fig. 19.

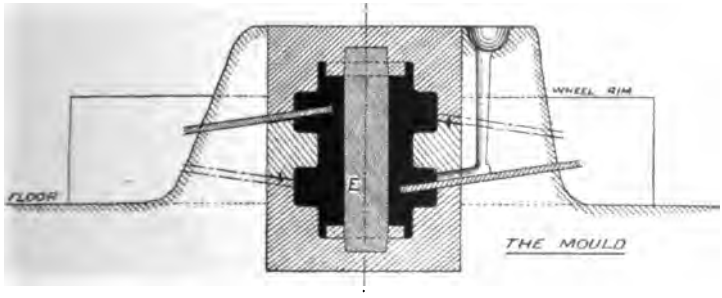

Fig. 20.

Road Wheel for Traction Engine.

Digitized by Google

Loam Moulding.—We shall now proceed to consider the moulding of such objects as may be done wholly or partly in loam by striking (or strickling), and first we will take an ordinary **Gas Pipe Main**, with spigot and faucet, the former being the smaller end of the pipe, which fits loosely into the faucet or larger end of the next pipe, see Fig. 22, which represents the finished pipe in section. To mould the outer envelope, we may either

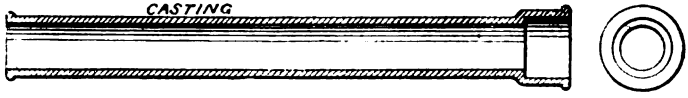

Fig. 22.

Gas-pipe main.

have a wooden pattern with the core prints at the ends, or may strike out a loam pattern from a board. Assuming the latter method, we need first a pair of trestles, Fig. 23, on which is placed a hollow cast iron cylinder with journals at the ends, and pierced with holes along its length for the venting of the core.

Round this cylinder straw rope is tightly coiled, after which a layer of loam is laid on. The loam being dry, a second coating is applied, and this time, as the handle is turned, the shape of the core is struck out by means of a board B secured to the trestles. The core *b* being dried in the stove, is blackwashed, and then covered with another layer of loam to be struck out by the second board A, and so the loam pattern is formed. Being again dried, an impression is made in the mould, after which, the last applied loam, or *thickness piece*, is removed, the blackwash facilitating this, and the internal core *b* being returned to its proper place in the mould (see Fig. 24), gate is made, and casting performed as usual.

It is advisable to cast these pipes either vertically, or on an incline, so that the metal may flow more easily and bring the scum to the end, and if they are very long, dry sand should be used in the boxes instead of green sand, for reasons previously stated. After the metal is poured, the escaping gas is lit at either end of the pipe. (*See Appendix II.*)

Fig. 25 represents the moulding of a **Bend** for the pipe in last

Digitized by Google

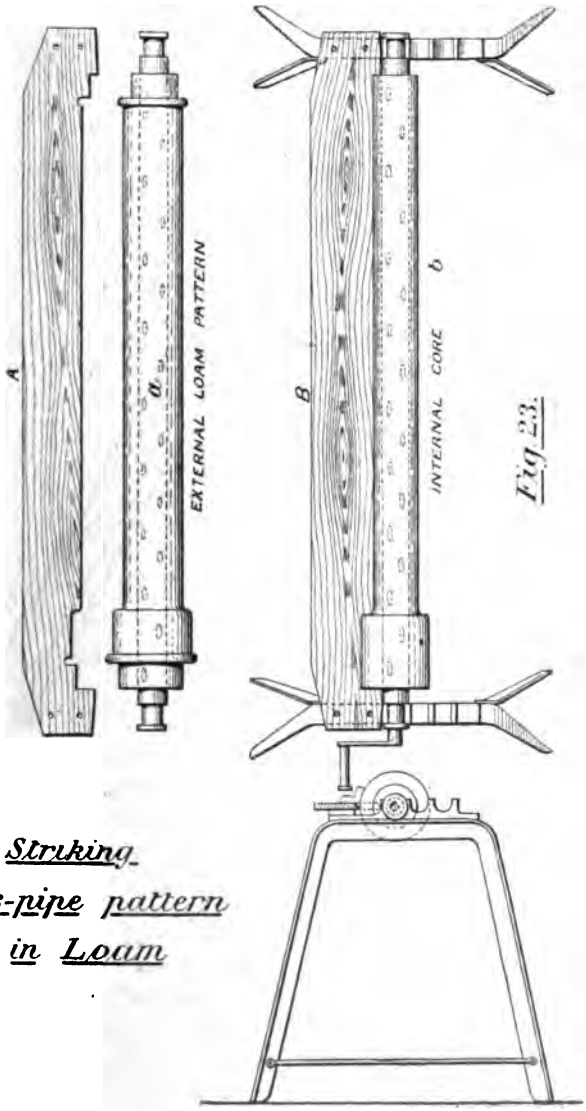

Fig 23.

Striking Gas-pipe pattern in Loam

Digitized by Google

example. To mould it we may either have a complete pattern and core box, when it would be done in green sand, and needs no further explanation; or it may be worked in loam by the aid of templates. For the latter method we may proceed in the following manner:

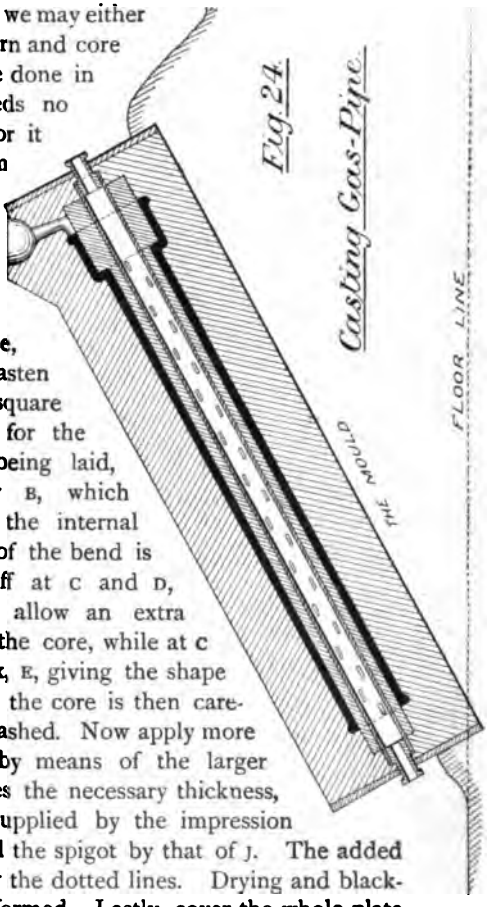

Fig. 24.

Casting Gas-Pipe.

Take an iron plate, Fig. 25, and on it fasten the bent wire A of square section as a guide for the template B. Loam being laid, it is traced out by B, which gives it the form of the internal surface. The length of the bend is carefully measured off at C and D, care being taken to allow an extra piece at D to support the core, while at C is applied the core box, E, giving the shape of the internal faucet; the core is then carefully dried and blackwashed. Now apply more loam and trace out by means of the larger template G, which gives the necessary thickness, while the faucet is supplied by the impression of the core box H, and the spigot by that of J. The added thickness is shown by the dotted lines. Drying and blackwashing are again performed. Lastly, cover the whole plate with loam, which, as it is required to be lifted off entire, must be well stayed with cross and longitudinal wires tied together by small wire. A wire should also stiffen the internal cores. (The whole of the foregoing is repeated opposite hand, on the plate F, the same bent wire being used.)

The solid block of loam thus formed on either board is taken off, dried and blackwashed, and now all is ready for putting

Digitized by Google

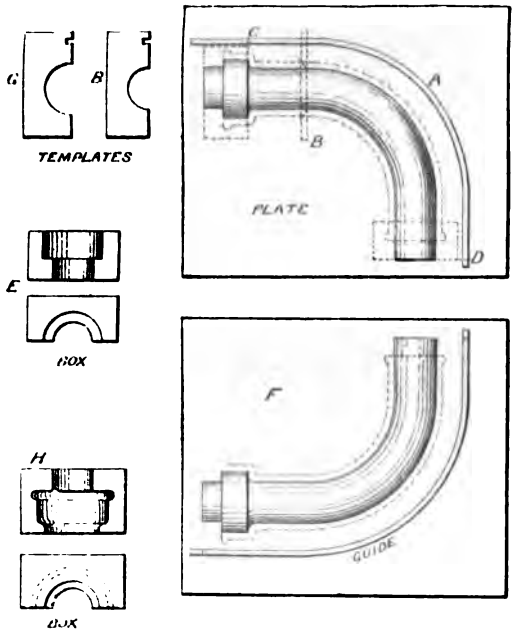

Fig. 25. Gas-pipe Bend.

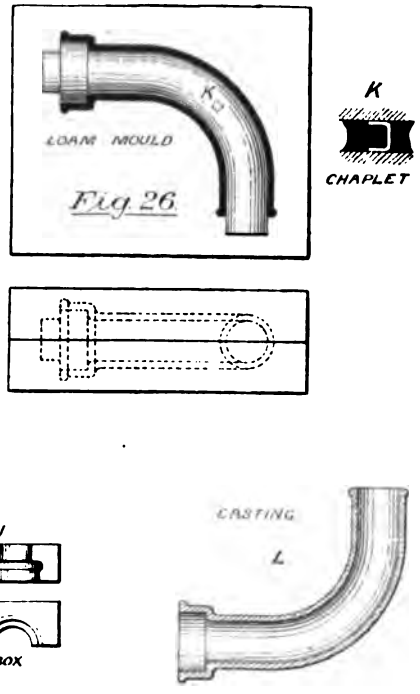

Digitized by Google

together to form the mould, with the exception of the thickness layer on the internal core, which must first be removed, and the two half cores taken off the plate and put back to back, thus forming a complete central core. The whole mould is shewn at Fig. 26, the bent part of the core being supported by a *chaplet* given in detail at K; being a bent, tinned, plate.

It must be quite understood that if many castings are required, the above operation would not be performed, as a pattern would give more expeditious results.

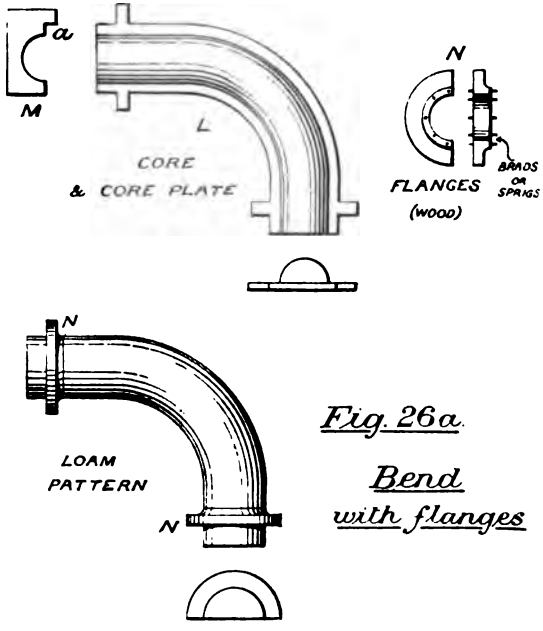

Fig. 26a.

Bend with flanges

A slightly different, but more usual way of moulding a pipe bend, is to cast two plates, as at L, Fig. 26A, from a wooden pattern of the shape of the pipe, a little margin being left at each side, the figure being for a pipe having flanges at the ends. The template takes the form M, and has a few nails driven in at *a*, to

Digitized by Google

prevent considerable wear as it travels along the plate. The internal core is shown struck on the plate, and the opposite hand having been made, these two are dried and laid aside. A larger

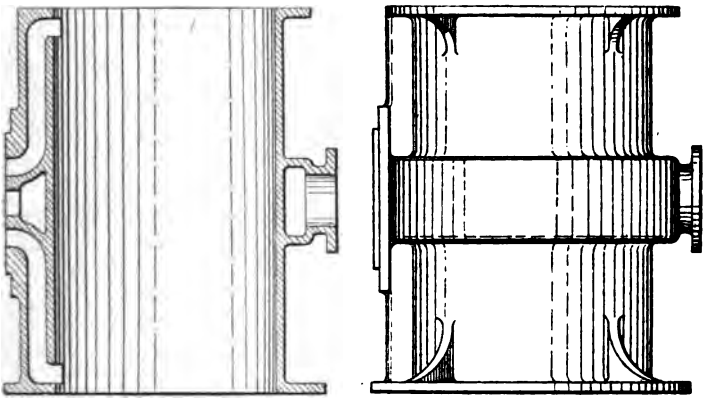

Fig. 27.

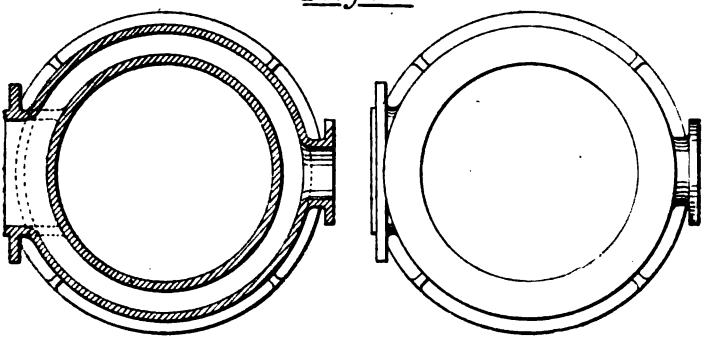

Steam Cylinder.

THE CASTING.

template strikes out the patterns, right and left hand (the wooden discs N serving as flanges), and these being dried, it is clear that we now have two half loam patterns and two half cores; the moulding, therefore, may take place in green sand in the usual

Digitized by Google

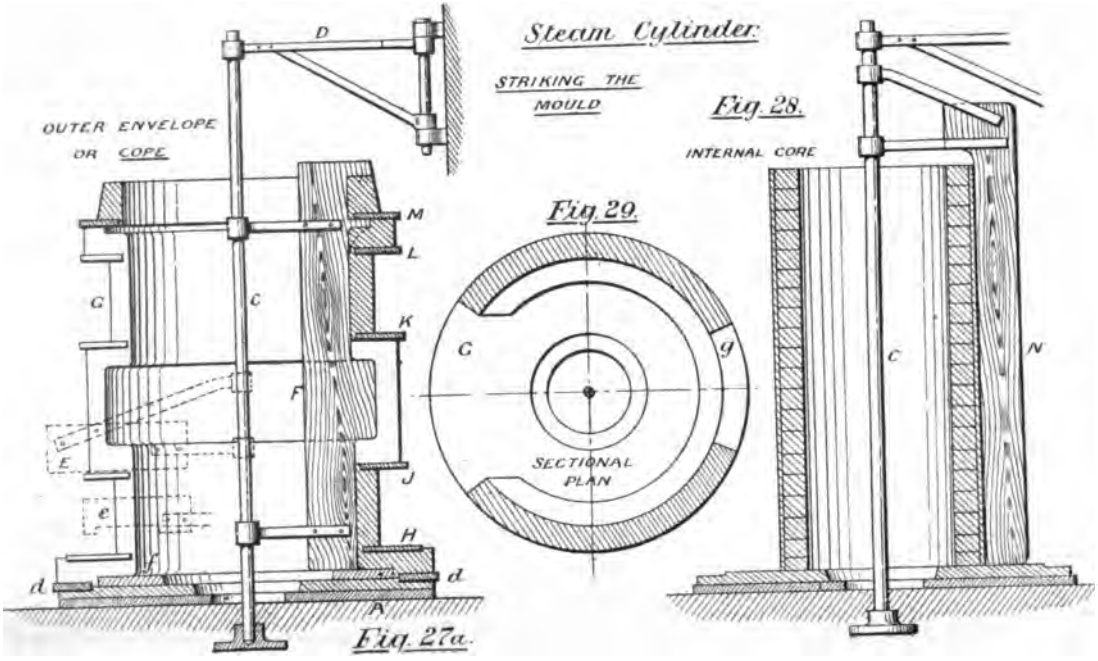

Digitized by Google

way. A few sprigs or brads in the flanges N serve to fasten the latter to the pattern.

The mould for a **Large Steam Cylinder** is usually made entirely in loam, and this operation we will now examine.

Fig. 27 represents the casting in longitudinal section, elevation, and in plan. The valve box is made separately, as is sometimes done with these large cylinders, but in any case, no further explanation is needed than that previously given, as a pattern would be made for it. The body of the cylinder would be swept out entirely by template boards, but special projections, such as steam ports and exhaust flange, will require core boxes and patterns.

An iron plate A, Fig *27a*, is laid on the foundry floor to support the structure, and a centre B is sunk beneath the ground-line, an upright spindle C being taken of sufficient length, and supported at the top by means of an arm D standing out either from the wall or from a crane pillar; all is now ready to begin.

A base of loam is swept out by the board E, shown in dotted lines, and representing the bottom of the cylinder flange ; this is dried and blackwashed, a flat ring *d* being then laid as a foundation for the core structure.

Taking board E away, another (*e*) is used to strike out the lower cylinder flange *f*, which is necessary as a support to help plate *d*.

The loam *f* being dried and blackwashed, the external core of the cylinder is next formed, because it is necessary to remove it for the formation of the internal core, and the latter, being in one piece and cumbrous, is made separately. The board F is now used to strike the outer form, the central projection being for the exhaust port, and an opening must be allowed at G, the full length of the cylinder (see Fig. 29) for the reception of the port cores on one side, and which may be traced out by a template board, while a similar opening *g*, of the depth K J, must be left on the opposite side for the exhaust flange core. It will be noticed that this outer mould requires, for building, the aid of annular plates at H J K L M, for the support of different pieces of the structure. These plates do not go entirely round, being prevented by the ports at G, and

Digitized by Google

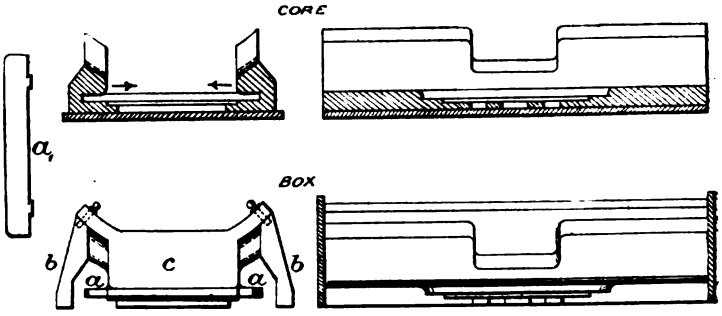

Fig. 30.

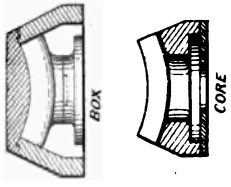

Fig. 33.

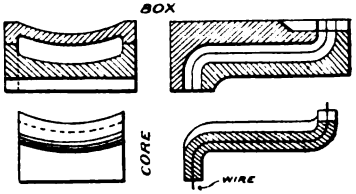

Fig. 31.

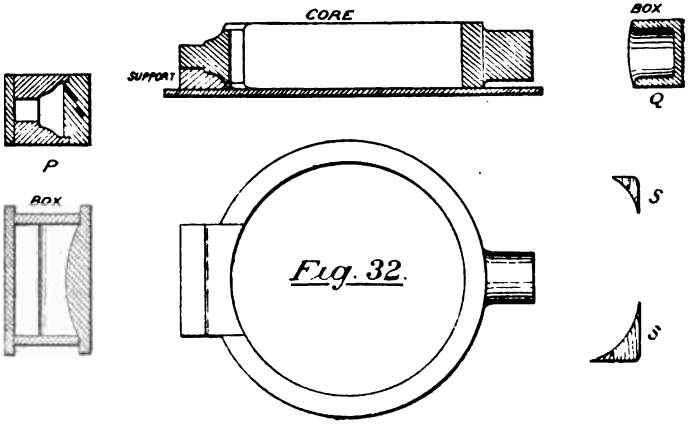

Fig. 32.

Steam Cylinder.

CORE BOXES

Digitized by Google

they now enable us to remove this outer portion in separate pieces to a safe place to dry, and allow us also to build up the internal core. Thus plate K may be lifted by crane, removing the upper portion first; next J and *d*. Discarding the loam plate *f*, which is no longer needed, our next proceeding is to take the board N, Fig. 28, having built up the core loosely with bricks, vented at the joints with coke powder, and strike out loam to represent the internal surface of the cylinder; this is dried in place by open fires and blackwashed. The projecting portions only now remain which, as we have said, must be made from core boxes. Fig. 30 represents the box for the outer contour of the steam ports, and a core is formed by laying it on a flat plate and filling up with loam. The parts *a a*, of the core box should be noticed: sides *b b*, can be easily taken away, but in order to draw away the centre *c*, the flanges must be dovetailed to *c* in such a manner that they may be left behind on withdrawal of the box.

This may be understood on reference to *a*, which shows one of these *loose pieces*. They may afterwards be taken away in the direction of the arrows. The box and core for the steam ports are shown in Fig. 31, and need no explanation.

The inside core for exhaust port, being circular, is struck out on a separate plate by board (Fig. 32), box P being required to give the projection on the steam side, and Q for that on the exhaust side. There is left the exhaust flange, which may be formed from the box in Fig. 33, the flange itself being loose on the pattern to enable the core to be withdrawn, the latter being made on a plate similarly to Fig. 30.

S S are patterns for the web at top and bottom of the cylinder, and, having been built into the core at Fig. 27*a*, may now be removed.

Finally, all may be put together to form the mould, in the manner drawn in Fig. 34, beginning at the bottom and putting the different cores in their places as we proceed; chaplets being required to support the annular exhaust core. Gates are next made, which had better enter the mould somewhat low down, in order to have some head of metal at that point. The object of this is to prevent air bubbles in the casting, by means of the weight of in-pouring metal, whatever air there may be in the

Digitized by Google

mould being thus forced upward, where it escapes at holes there provided, termed *risers*. The mouth of the pouring gate should of course be a little higher than the top of the cylinder. Venting is rarely necessary in loam moulding, except for such pieces as the long **S** cores. Piece R, Fig. 34, is left for the purpose of receiving

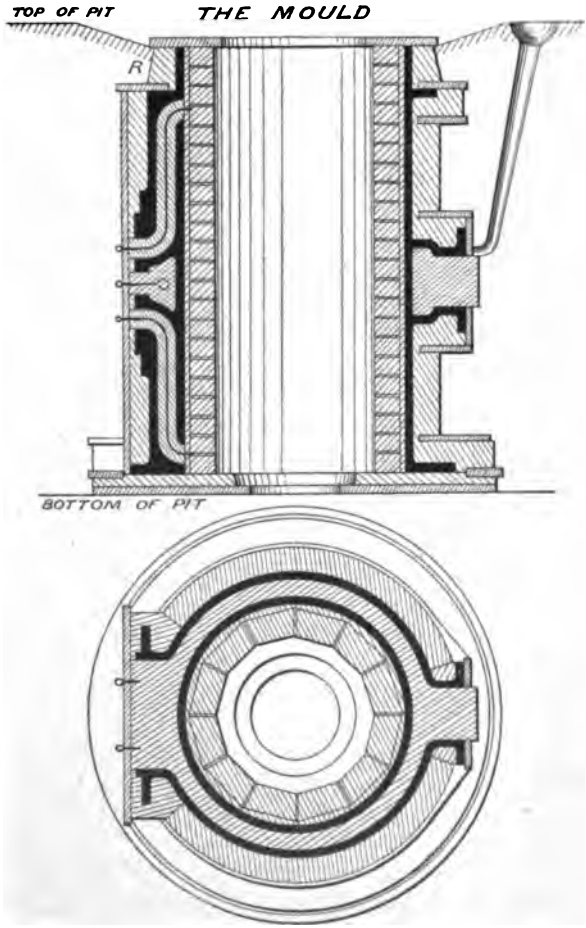

Fig. 34 Steam Cylinder.

Digitized by Google

the scum, in order to leave the casting sound. Wherever the molten metal is to touch the iron plates the latter should be washed with loam.

Foundry Pits.—It should be understood that the floor we have spoken of in the last example is not strictly the foundry floor, but that of a pit deep enough to hold the whole mould. Important castings like the one last considered, and especially upright ones, are always thus treated, and after the mould has been finished the space left in the pit is filled in and rammed so as to bed the mould tightly against the sides of the pit, and thus resist the pressure of the metal on casting.

A Screw Propeller can be best moulded in loam, a pattern being provided for the centre boss. Referring to Fig. 35, a board A centred on the vertical spindle, and balanced by means of a small weight, is revolved so as to travel along the incline B C, which is only a template curved so as to have D as its centre, and forming part of a screw of the same pitch as the propeller. It is very clear then, that by backing up the surface B C with loam, we shall obtain a screw surface the same as that of the propeller blade required. The next thing is to mark out the shape of the blade, shown in dotted lines. On the blade thus marked out, dried and blackwashed, we now lay strips of wood, as shown at *e*, Fig. 36, representing the thickness of the propeller blade, and the surface is then covered with loam up to this thickness, smoothed off, and again dried and blackwashed. Now completely cover with loam, and so form top mould, which in its turn is taken away and dried. The thickness piece being removed, the blade is completely moulded, and this may be repeated for the other blades. Setting all the lower moulds then in position on the floor, the bottom half of boss pattern is applied (Fig. 37), and, being filled round with dry sand at E E, the top half is treated similarly. Lastly, the mould is completed by the addition of a core for the central hole, and of the top box, and the whole has the appearance of Fig. 38.

A large **Fly-wheel** may be moulded without the necessity of making a pattern for the whole of it. A coke bed is first formed on the floor for the purpose of venting, and a centre is sunk for the spindle A, Fig. 39. Then the core box in Fig. 40 is taken, which is formed so that a certain number of cores made

Digitized by Google

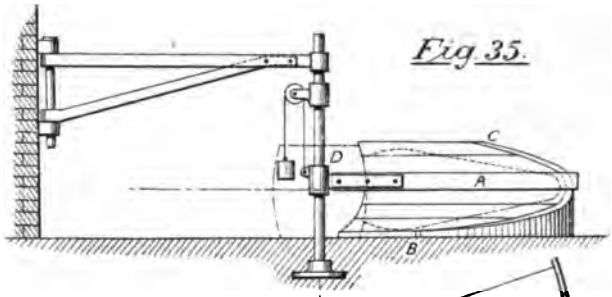

Fig. 35.

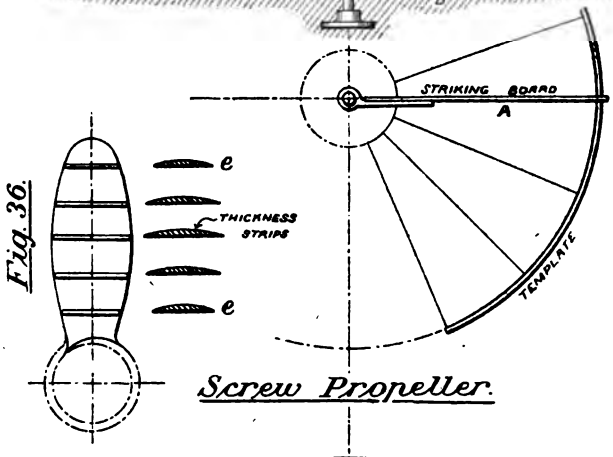

Fig. 36.

Screw Propeller.

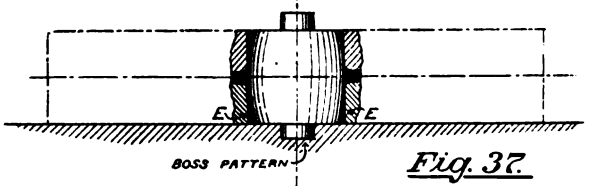

Fig. 37.

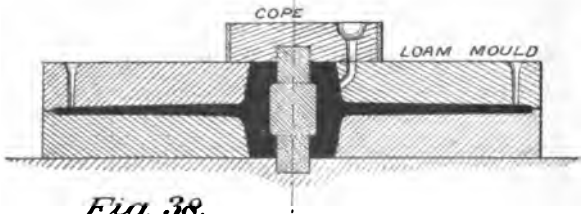

Fig. 38.

Digitized by Google

rom it may reach quite round the outer rim of the wheel, as suggested by the dotted lines; the back and top boards B and C being loose, to remove the core, which may be made in dry sand. After levelling the floor by means of board D, Fig. 39, the cores from Fig. 40 are set up at E, with the curved surface inward and gauged from the centre by the striking board F, which has the same radius as the outside of the fly-wheel rim. A small space is, however, left for the application of a coating of loam which is struck out at top and side by the board F.

We next require the arm cores. The box for these is shown at Fig. 41, and supposing we have in our case six arms to the wheel this box must be made a sector of one-sixth part of the circle. The top, bottom, and sides are removable, so that when the box has been filled with compact dry sand they may be taken away, together with the rim part and boss, leaving the arm, which, being tapered, may be knocked out with a mallet at G and so removed. Some moulders might prefer loam for these cores, which would be baked in the usual way.

Putting the sector cores in place, as in Fig. 42, a pattern is used for the boss, with a cope of green sand at H. There only remains the completion of the cope for the rim. This may be done in dry sand, contained in boxes shown in plan at J, and by means of a pattern K placed in the channel formed for the rim, top box J being put on and rammed up there. This pattern K is passed round until the whole of the top of the rim is formed, and is finally withdrawn by removing one of the boxes. The mould is now complete, and it is only necessary to form the gates, which should be pretty central, while risers (about four) are put in the boxes J to show when the metal has filled the rim, which is known by its lifting a metal ball placed upon them. Of course great care must be taken in finishing the mould, so that no unsightly marks be left on the casting at places where the cores join each other.

Marine Condensers, being usually large cubical castings, are built up in loam in the manner described for other objects, by the aid of what are known as skeleton patterns, projecting flanges having patterns and core boxes. (*See Appendix II.*)

Fig. 43 shows one or two objects suitable for loam moulding, A being a large **Air Vessel** for a pump, and B a **Cone Pulley** for some machine tool.

Digitized by Google

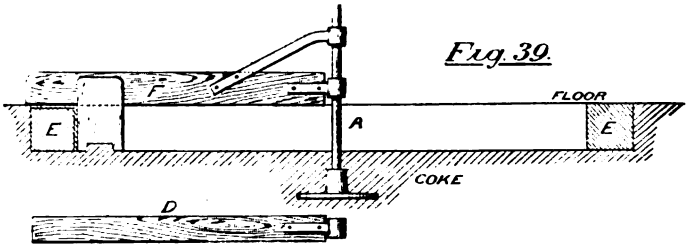

Fig. 39.

Fig. 40.

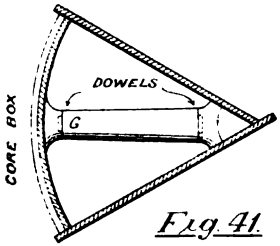

Fig. 41.

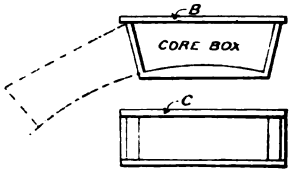

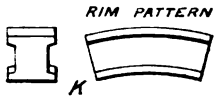

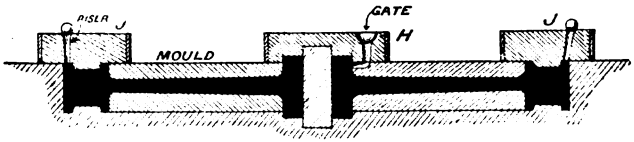

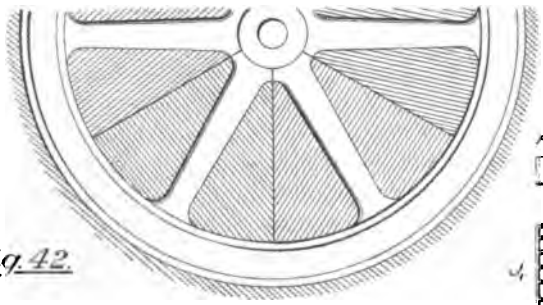

Fig. 42.

Fly Wheel.

Digitized by Google

The internal cores may be noticed in these examples. They are in both cases supported by being hung from the top-plate. In the air-vessel A, the portion *a* is struck out first, by means of

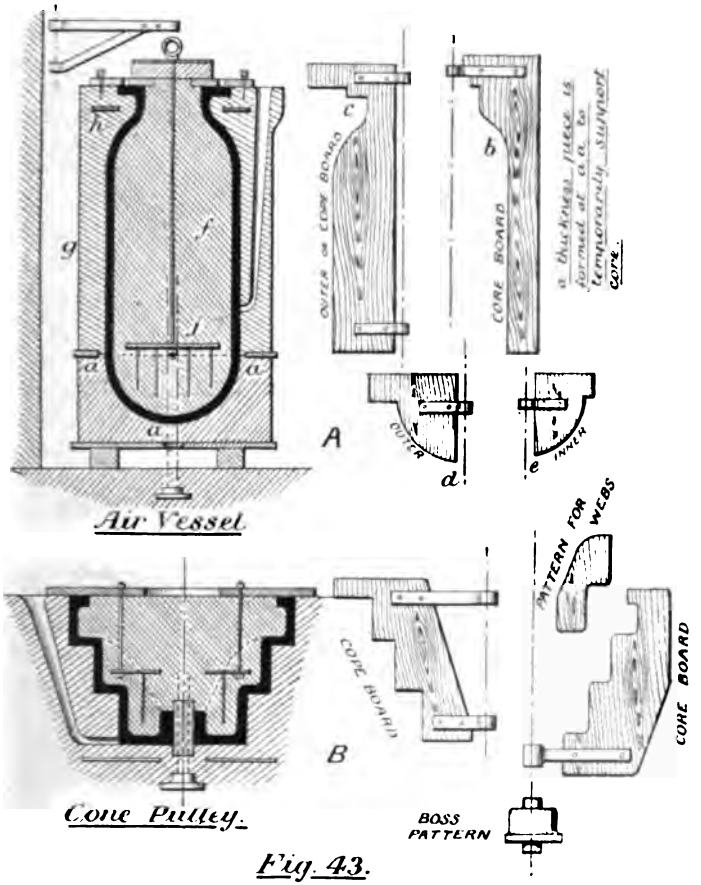

Fig. 43.

boards *d* and *e*, with a thickness piece, blackwashed as usual; then follow with internal core *f*, using board *b*. Remove *f* when dry, and strike out *g* by means of board *c*.

The core *g* is now removed, but returned in company with *f*, first taking away the thickness *a a*, and the whole structure is then

Digitized by Google

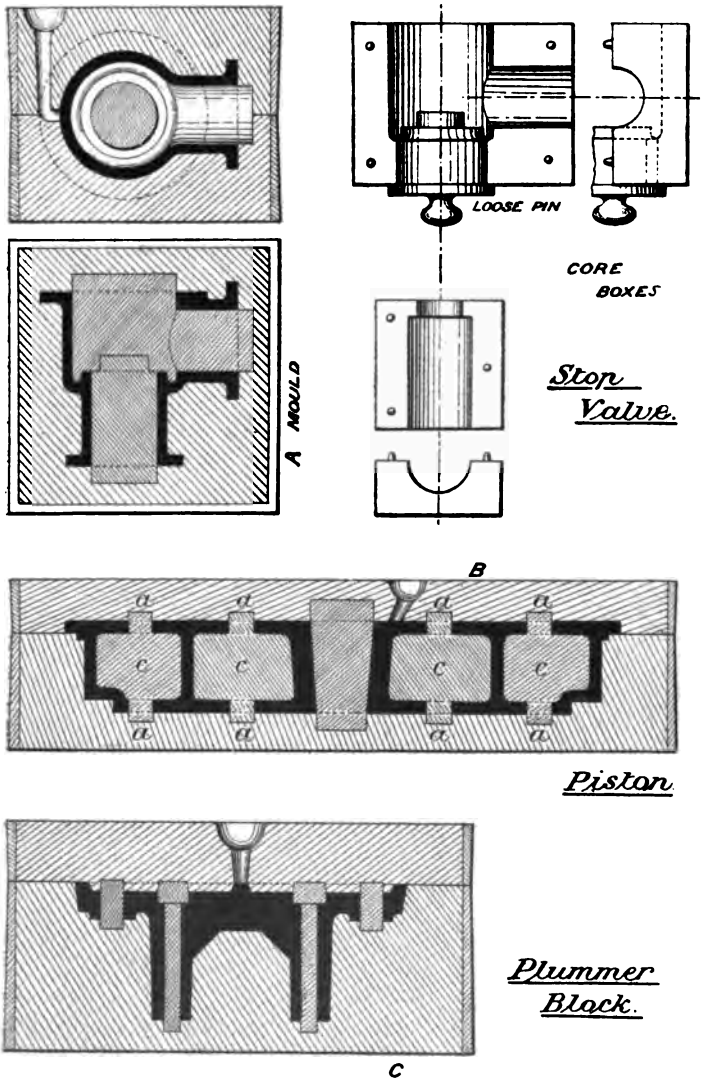

Fig. 44.

Digitized by Google

bolted together; *h* is a ring to stiffen *g*, and *j* is a pronged plate to support the core *f*.

The cone pulley B may be struck out in the floor, while the internal core is made separately on a plate; patterns being used for webs and boss. In fact, any casting of regular shape, either circular or cubical, may be moulded in loam much more economically than by means of wooden patterns; the symmetrical parts being struck, and projecting pieces having core boxes.

A few other examples of moulds in green sand for different objects, requiring no special description after what has been previously said, are given in Fig. 44, where A is a stop-valve, the larger core box for which has a loose pin to form the impression needed to support the smaller core: B a large marine- or stationary-engine piston, the core being supported by and vented through the pieces *a a*, which are filled in on finished casting by screwed plugs. Boxes are needed for the cores *c c*, and C represents the mould for a plummer block. (*See Appendix II.*)

Wheel Moulding.—Not many years ago all spur and bevel wheels were moulded by providing a finished pattern for the wheel required, but as machine moulding is not only simpler, but far more accurate, and as it does away with the necessity for storing heavy patterns, which are sure to be out of truth by the next time they are required, toothed wheels are now extensively moulded by machine.

Scott's wheel moulding machine may be understood by reference to Fig. 46, and it may be premised that three operations are necessary in the working of it.

A board B is set upon the central spindle A (see Fig. 45), for the purpose of striking out the greatest diameter of wheel, on which the teeth are to be formed, giving at the same time the height of the top and the bottom of the rim. The spindle being removed, the machine is put in the central socket C, Fig. 46, and the operations are now to be explained.

A pattern D, of two teeth, is accurately made in hardwood, and being fastened to the upright arm E of the machine, this arm needs to be—(1), fixed to the requisite radius of wheel; (2), raised or lowered; (3), passed round the rim of the wheel by the rotation of the arm F.

Digitized by Google

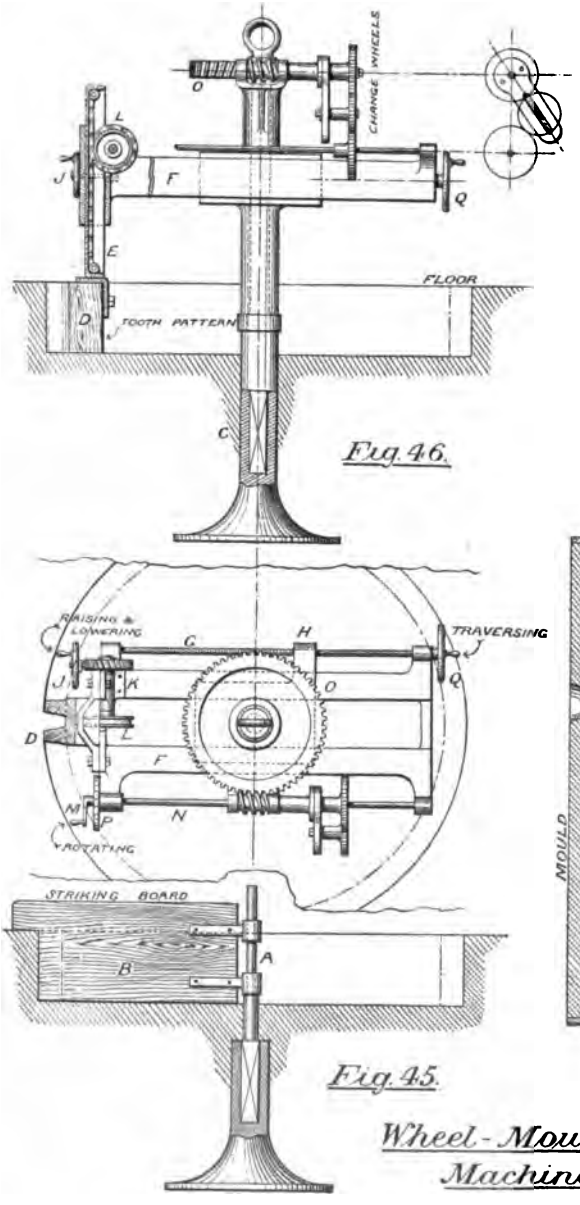

Fig. 46.

Fig. 47

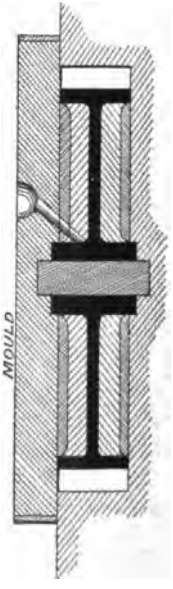

Fig. 45.

Wheel-Moulding Machine.

Digitized by Google

The first operation is done by means of the traversing screw G which slides the whole of F and E by the nut H, the latter being fixed to the centre piece. The lifting and lowering is done by the hand wheel J, which by worm and worm wheel turns shaft K and chain wheel L, and the sliding arm E is raised or depressed by the chain which is fastened to each end and tightly wound round wheel L. The third operation, the rotation of the arm F, is effected by turning the shaft N from the handle M, and, the motion passing through the change wheels is transferred to the worm wheel O, which is fixed rigidly on the central portion of the

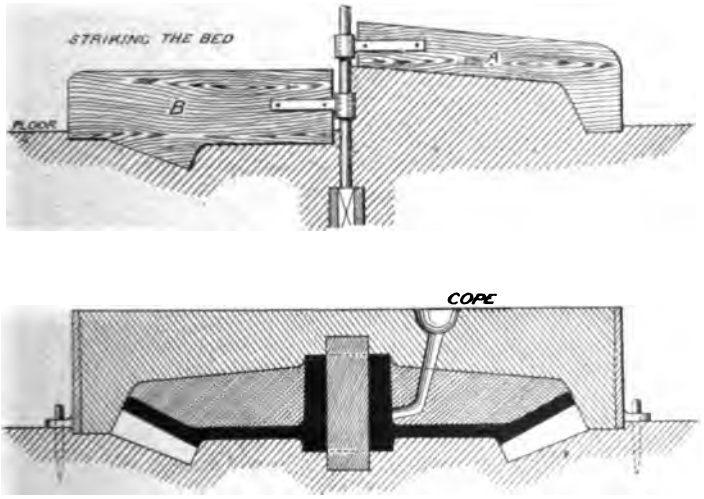

Fig. 48.
Bevel Wheel.

machine. Varying change wheels can be inserted in much the same way as in a screw-cutting lathe, and the revolutions or fractional parts made by the handle can be seen by means of the graduated disc P, so that any part of a circumference, such as the pitch of the teeth, can be accurately traversed by the mechanism last explained. The teeth are then formed in the sand after the

Digitized by Google

proper radius of arm is fixed, by lowering the tooth pattern filling up with sand, raising, rotating the amount of the pitch lowering again, and so on until the whole wheel is formed. The machine is now taken away by attaching the crane chain to the eye-bolt at the top of central spindle (*see also bottom of p.* 58).

Core boxes are needed for the wheel boss and segments between the arms, and for central hole. Wood strips are used as gauges to fix the cores in position and to preserve the proper thickness of the rim and arms; and a cope being placed over all, gates are formed and the wheel cast.

Bevel wheels are moulded in a similar manner to the above, the principal alterations being the strickle boards and tooth patterns. Fig. 48 will make this clear. A board A strikes out the back of the wheel in green sand, and parting sand is applied; an impression of the wheel back is then taken in the top box, and the latter removed to finish; board B next forms bottom face, cores and boss pattern completing the remainder. The core-boxes for the wheel arms are shown in 72*b*, p. 61, and similar boxes will be found in Fig. 42.*

Chilled Castings.—Where a very hard and durable surface is required to a casting, "chilling" is effected by making that part of the mould, where the said face occurs, of iron. When the molten metal meets the surface of cold iron, it cools rapidly and forms crystals of white cast iron, hard yet brittle, where it meets the iron mould, and for a depth of an inch or more within the casting, according to the mixture used, or the weight of the chill mould; the rest of the casting is still grey and soft.

It would seem that the graphite crystals do not, under such circumstances, have time to form, and so the carbon becomes combined with the iron. Suitable objects for chill casting are:—rolls for plate mills used in forging plates (*see Fig.* 275, *p.* 280), and which require a great depth of chilling, as they have to be trued up again on being worn down; tram-car wheels, the rim only being chilled, this class of traffic not being capable of supporting the expense of steel tyres; points of plough-shares, which wear away at a very rapid rate in the earth; bushes for ordinary cart axles; railway chairs; pro-

* For other moulding machines see Appendix II.

Digitized by Google

jectiles for large guns; and, in fact, all classes of work required to stand wear and tear, and not especially needing machining.

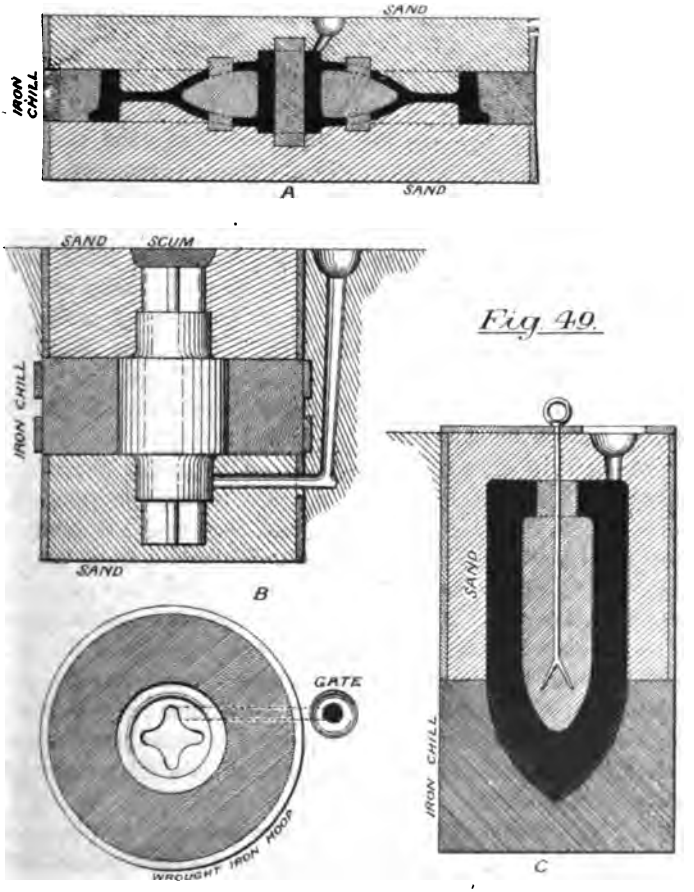

Fig. 49.

Chill Moulding.

Fig. 49 will explain the methods of chilling:—A, a car wheel rim; B, a plate roll; and C, a shell. Rolls and bushes are moulded upright, and share points made in an entire mould

Digitized by Google

of cast iron. The iron mould must be painted with a thin coating of very fine blackwash before casting, and some care must be taken in the forming of the gates, as, if there should not be sufficient pressure from the 'head' of metal used, the iron will recoil on meeting the cold mould, and form a rough casting. Care must also be used in the case of bushes, to remove the core chill before the casting cools down firmly upon it. The chills (the name given to the iron moulds) are usually made of good cast iron, though, in some rare instances, wrought iron has been used. Some of the details of chill moulding vary according to different authorities. Some founders purposely rust their chills on being first made, to assist the blackening in resisting the action of the metal, it being generally believed that the latter tends to fuse and injure the chill. Other founders, notably in the case of projectiles, neither rust them nor use blackening. The chills should be warmed before casting, in order to expel moisture, and should have a weight about six times the casting they are to chill, or the chilling will be too slow.

Malleable Castings are obtained by taking the article, after being cast and cleaned up (this last is very important), and putting it, along with others, in an annealing furnace, in company with some substance that will absorb the carbon from the cast iron. Such substances are, oxide of iron in the form of scales from the rolling-mill, or some other of the metallic oxides, placed in the furnace in a state of powder. The intensity of the heat, and the time the casting should remain in the furnace, both depend on the size of the casting and the amount of malleability required, the usual rule being to keep it at a white heat for about a week, adding to this the time required to raise the temperature and to cool down.

Fig. 49*a* shows an annealing furnace with cast iron boxes AA holding the castings, which are covered with a layer of sand. Of course, it must be understood that it is only to a short depth below the surface that the casting becomes converted into wrought iron, though right through for small articles.

Softening.—If a casting is so hard that it cannot be machined, it may be softened by heating and cooling out in common sand, or any other bad conductor of heat.

Digitized by Google

Brass Founding.—The moulds used in the casting of brass require no new description, the only difference in this class of work being the manner in which the metal is melted.

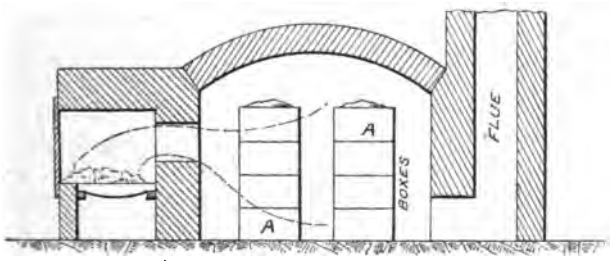

Fig. 49a.

Furnace for annealing Malleable castings.

As the castings required are much smaller than those we have recently been describing, the brass is made directly in crucibles of some impermeable material, black-lead being the best. The melting furnace is shown in Fig. 50, and usually there are several of these side by side and separately connected with the chimney. The top of the furnace is only a little above the floor level, and in brass foundries it is customary to have the part of the shop near the furnace entirely reserved for casting purposes; the casting and moulding shops being entirely divided by a wall in the best establishments. The principal difficulty in the making of brass is that of the different fusing points of the two metals used—**Copper** and **Zinc**. Thus, copper melts at 1996° F., while the melting point of zinc is as low as 773° F.

The copper is first melted, and the zinc is only introduced a short time before casting, by means of tongs, pushing it down in small pieces under the melted copper. It should flare up on doing this, which is a sign that the heat is quick enough. If it is left in too long, much of the zinc will be lost by evaporation.*

* See also Appendix I.

Digitized by Google

In bringing this chapter on casting and moulding to a close, a few practical points will be mentioned, although it should be clearly understood that perfect practice can only be obtained by actual work on such articles as have been mentioned in the text.

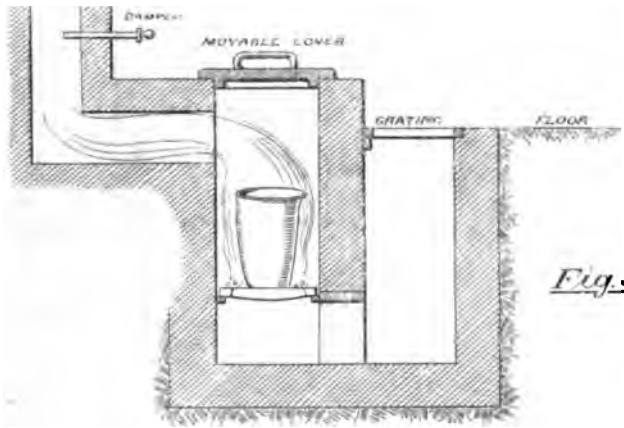

Fig. 50.

Crucible Furnace for Brass.

The Size of Gates, and the number of them, can only be determined by constantly watching the results obtained from previous work.

Flat gates ▬ should be avoided as much as possible, as they tend to clog, though sometimes they are beneficial when they are required to break off easily without damaging the casting. Fig. 51 is intended to represent diagrammatically the different gates and channels used to supply a mould; the pouring gate; the skimming gate, for the purpose of retaining the scum (and here some ingenuity is required to keep the latter in the skimming gate by centrifugal action, the whirling being produced by admitting the metal at a tangent); the sprues or connexions from skimming gate to mould (they may be of any number considered necessary); the feeding gate or gates, the use of which is to fill up any part of the casting which is likely to shrink; and the risers, which are to allow the whole of the air in the mould to pass out and so prevent blow-holes, the

Digitized by Google

soundness of the casting being also in the hands of the pourer, as he may keep the riser covered for a shorter or longer time.

The size of gates is determined by the fact that the metal must neither flow too slowly so as to choke, nor too quickly so as to break the mould. All the while the pouring is going on, the moulder agitates the metal in the gates by means of an iron rod, which he moves up and down until the metal has cooled so far as to prevent him doing so any longer; in this manner homogeneous casting is more likely to result.

A great deal of art lies in the ramming of the mould, but as a rule, the deeper portions of it should be rammed most, as there will be a greater head of metal on them. The floor of the shop should be well vented by a bed of coke and the insertion of pipes, to take away the gases from all work done on the floor, and coke dust should be put in the joints of loam building; some cores too should have a large amount of coke in their centre.

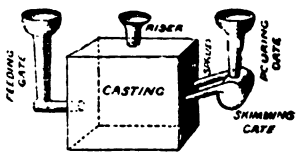

Fig. 51.
Diagram of Gates

The venting of the mould is also a matter which requires a great deal of practical experience to enable it to be done with success. Large cores, enclosed on three sides by metal ('pockets,' moulders call them), should be particularly well pierced, and green sand moulds should be much better vented than loam or dry sand work, on account of the steam rising from the damp sand and the compactness of the latter.

Cores require good support by means of plates or wires, especially such as those in Figs. 25, 34, and 43, and all cores that are not held down by the shape of the mould, should be so fastened, for they are so much lighter than the molten metal, that they would float out of position if left to themselves.

Cores should be dried in the stove for about twelve hours, and should only be placed in the mould a short time before pouring, to prevent the absorption of moisture by them from the mould.

Patterns are lifted out of the sand by screwing rods or handles into them (*see Fig. 73d, p. 67*), and raising slowly, at the

Digitized by Google

same time rapping the pattern carefully to prevent the sand adhering, and a few points should here be noticed as regards the finishing of the mould. The moulder uses trowels, and 'sleekers,' (which last are only trowels of special shapes) to smooth away any broken portion, but, if the mould is made too smooth, there is great danger of blistering or scabbing, from the fact that the mould, having lost to some extent its porosity, refuses to allow the escape of gas, and it is generally understood by moulders that the hand makes the best trowel, though certainly it is always better to let a mould remain, if possible, just as the pattern left it.

In Fig. 52, a few moulders' tools are sketched.

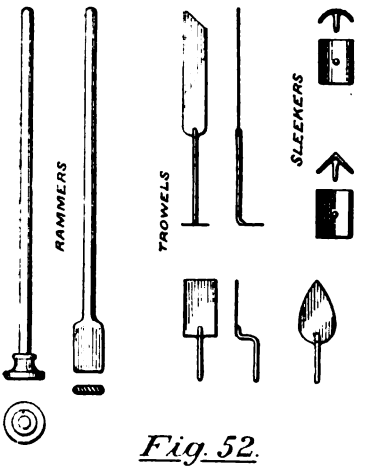

Fig. 52.
Moulders' Tools.

The upper box is usually termed the '*cope*,' which also applies to the outer mould, and the lower box is sometimes called the '*drag*.' The cope should be well weighted to ensure sound castings. When two boxes are used, they fit together as shewn in Fig. 2, and can be easily replaced, but if the floor serves as bottom box, exact correspondence is obtained by driving stakes into the ground through the lugs of the top box.

Chaplets have been before mentioned, and are required to stay cores that cannot be otherwise supported; their use, however, is not advisable, for they tend to produce weakness in the casting in which they remain. They should be tinned, or at least freed from rust, to ensure uniting with the casting.

We have already described the charging of the cupola; it remains for us to explain the method of tapping it. The man at the cupola is provided with two iron rods; one he uses to pierce a hole in the clay stopping, which he does as soon as the moulder

Digitized by Google

has brought his ladle under the mouth of the cupola; the other rod has a flat end, with a lump of clay adhering. As soon as the ladle is full, he applies the clay to the mouth in order to stop the flow. To tap with safety, he should stand on one side of the trough and use his tapping rod obliquely, while on stopping again, he should cut off the stream from the top side.

Mixtures of Iron.—This is another art which nothing but observation and practical experience can reduce to a nicety, different mixtures being used for the same purpose by different founders; indeed, the success of certain firms depends in a great measure on the mixtures used. Still, a good idea can be given of what is required for each purpose.

The varieties of pig iron having been already stated, we will now consider each separately.

No. 1 is the weakest but most fluid of all the pigs, and may be used by itself for ornamental castings on account of the ease with which it fills the corners of the mould, but it is usual to mix it with '*scrap*' to increase its hardness, ultimate strength, and closeness of grain.

No. 2 is finer in grain and stronger than No. 1, and is used wherever some strength is required with great fluidity.

No. 3 combines the greatest degree of strength consistent with fluidity, and is therefore most extensively used, and in great favour with founders.

No. 4 is the strongest pig for foundry use (the remaining numbers, 5 and upward, being only required for conversion into wrought iron), and is therefore used for heavy castings requiring strength, such as girders, columns, bed plates, &c.

For strong castings two-thirds of No. 4 may also be used with one-third of No. 1.

Scrap is the name given to the broken up parts of old castings, which of course may be divided into good and bad scrap. Some founders place great reliance on it, using nothing but scrap with an admixture of No. 1, say two-thirds of scrap to one-third of No. 1, while others prefer using an iron like No. 3, mixing with it only a little scrap to strengthen it, and so produce a harder, close-grained casting. It is also a good plan to mix iron from different blasts.

Digitized by Google

While speaking of scrap, we cannot do better than endeavour to understand the advantage or otherwise of remelting. We have before said that remelting is a disadvantage. It is true that the iron becomes purer as regards the elimination of graphite, acquiring a *whiter* appearance, with, at the same time, increased strength and closeness of grain; but, on account of other impurities, it is no longer as tough as before, and its ultimate extension is therefore decreased. Unwin says: 'Remelting improves the strength, but if repeated too long the tensile and transverse strengths suffer, though the crushing strength and hardness increase.' (*See Appendix II.*)

For chilled castings, a strong iron, as Nos. 3 and 4, is needed, because the chilling weakens the metal.

Malleable castings require a pure mottled iron, or at least one having very little grey mixed with it; for if the particles of graphite present in coarse grey iron are taken away in the furnace, honeycombing will result.

Girders and columns must have a strong and elastic mixture; cylinders should be treated for hardness as well as strength, and therefore require as much white iron as convenient; pulleys need a soft mixture, such as a large proportion of No. 1 with a little of No. 3 for strength.

Steel Casting requires no explanation. Its conversion from iron will be treated in a subsequent chapter. The only difference in the foundry is, that in order to prevent 'honeycombing,' which has been a great trouble ever since steel castings were first used, great care has to be exercised, and even then many castings are wasted, while brittleness is only prevented by slow annealing for over a week or a fortnight of time. (*See Appendix I.*)

Sir Joseph Whitworth introduced a method of compressing the steel while in the molten ingot by powerful hydraulic pressure, in order to prevent this troublesome honeycombing, the only objection to his process being considerably increased cost. (*See also bottom of p.* 82, *and Appendix II.*)

Digitized by Google

CHAPTER II.

PATTERN MAKING AND CASTING DESIGN.

THE arts of moulding and pattern making are so inevitably interwoven, the pattern maker especially requiring to know at least the *principles* of moulding, that it would be quite impossible to make these two first chapters independent of each other, and as the subject of pattern making has been so much entered on in our last there is little left to say as regards the *forms* which patterns should take; but whatever has been omitted we will endeavour now to supply.

Wood.—Pine and mahogany are the two woods most extensively used, and are kept in large stores until they are perfectly dry. White and yellow deal are used for the larger and less accurate patterns, but are not hard enough for the better ones, nor so good to resist warping as other woods.

Mahogany warps and shrinks very little in drying, and is consequently in great favour. On account of that fact, and the ease with which it is worked, it is considered the best wood for pattern making; expense, however, precludes its use for large patterns.

Cherry wood ranks next to mahogany; it warps a little more, and is rather more troublesome to work.

Sycamore, lime tree, and American walnut are other woods used.

Iron patterns are employed for lighter objects, or those requiring very great accuracy.

It would be well before proceeding further to consider the way in which timber warps in drying, as this will show us some of the reasons for building up a pattern in a particular way.

The shrinkage of wood in length is so inconsiderable that it may be disregarded; and, in fact, some imagine there is none.

The greatest contraction is across the grain. To prevent the splitting of the tree, as at Fig. 53, it is sawn up into planks whilst green, and these in drying take the form sketched in Fig. 54. The outside layers contract the most, these being the youngest

Digitized by Google

wood, and, as a consequence, the centre plank is narrower at the edges, while the side planks become drawn in, in the manner shown at A. If the tree be cut into quarters, each quarter will contract, according to the above law, in the manner sketched at Fig. 55, the sector piece at B becoming narrower, the square at C becoming rhomboidal, and the circle at D elliptical. Even after

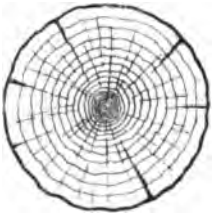

Fig. 53.

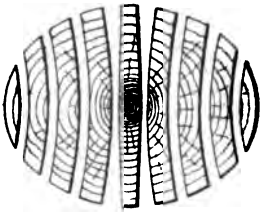

Fig. 54.

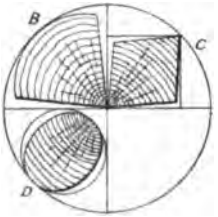

Fig. 55.

Fig. 56.

Shrinkage of Wood.

timber has been thoroughly dried, it will always warp if a good shaving be taken off it, as may be seen at Fig. 56, for a moist surface is exposed, which, drying, must contract the side that has been planed. It is, therefore, suggested by some authorities that, in first beginning a pattern, the wood should he marked out and cut to the size required, so as to have some little time to set before being used. (*See Appendix II.*)

Tools and appliances.—It would be unnecessary in a work like the present to occupy the student with elaborate descriptions of the hand tools used by the pattern maker. The following illustrated list will serve to explain them :

Digitized by Google

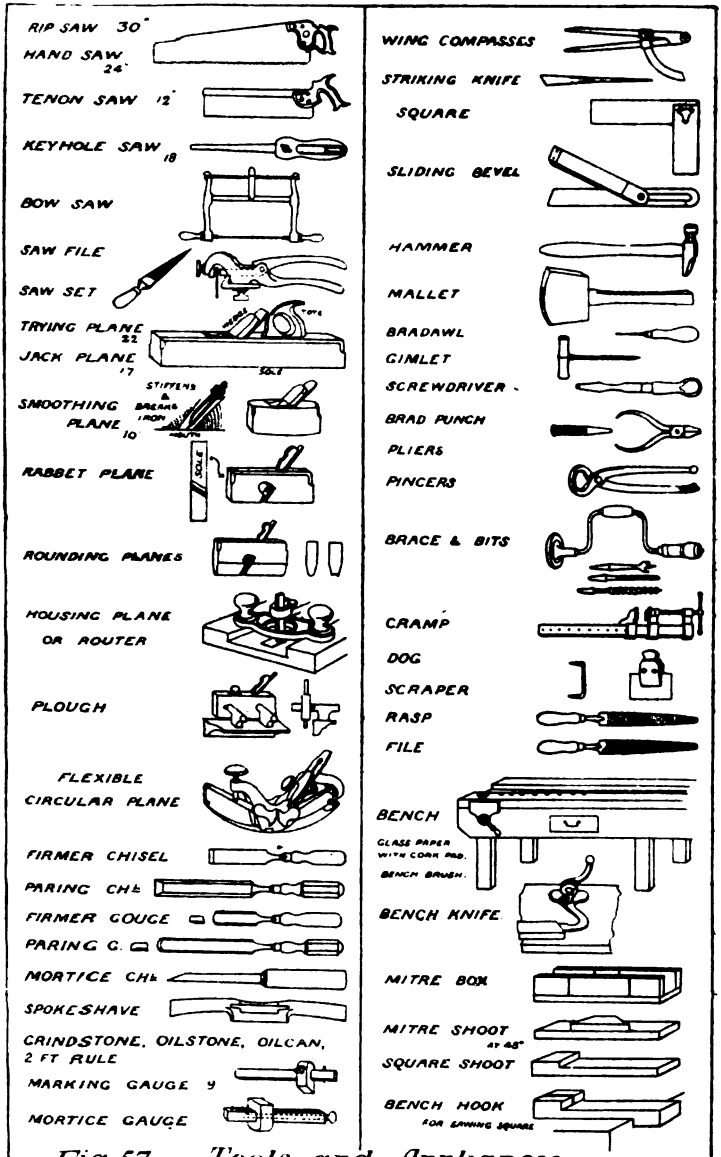

Fig. 57 *Tools and Appliances.*

Digitized by Google

The flexible plane is very useful for truing large concave or convex surfaces, a symmetrical curvature being given to the sole by simultaneous adjustment at front and back.

Of machine tools, two or three lathes are required; the first, with a long bed and two headstocks, Fig. 59; the second, a large face lathe for turning wheel rims, Fig. 60; and the third, a light face lathe for small articles, Fig. 61. Their speeds must be considerably above those used for iron turning. A tool rest is used to them all, and the work is done entirely by hand, the tools necessary having such edges as are sketched at Fig. 62.

The mandrel of the lathe is provided with a chuck, which has a different form for each lathe; thus, the face lathe has a screw on the mandrel to receive the flange chuck (*see* A, Fig. 60), and the face plate on which the pattern is turned is supplied by a disc of wood bolted to the chuck. The lathe with the two headstocks is provided with a chuck of the form shown at B, Fig. 59, which is well pressed into the end of the pattern, and so compels the latter to turn with the mandrel; and in the small lathe, the pattern is screwed on the mandrel at C.

Other machine tools required are:—a band saw, circular saw, and, if possible, a wood-planing machine.

Arrangement of Mould.—It is the duty of the pattern maker to so arrange the moulding of his pattern as to cheapen it (the moulding) to the utmost, and give the least trouble in the foundry. Thus, if the mould is to be in green sand, as little dried core work is to be used as possible, and very often a great deal may be done by the introduction of *loose pieces*, which are left in the sand after the body of the pattern has been withdrawn, and are then removed in another direction (*see* A, Fig. 30). He should put as little of the pattern in the top box as is practicable, for it is evident that this part of the mould must receive the worst treatment, being lifted off and turned over, perhaps more than once. Added to this, the fact that the cope has to be taken away so as to leave the pattern behind, means the using of a good deal of care, despite which much broken sand may still appear; while the half pattern in the bottom box may be lifted in full daylight, and no accident need happen to it. We may here mention generally the method of withdrawing trouble-

Digitized by Google

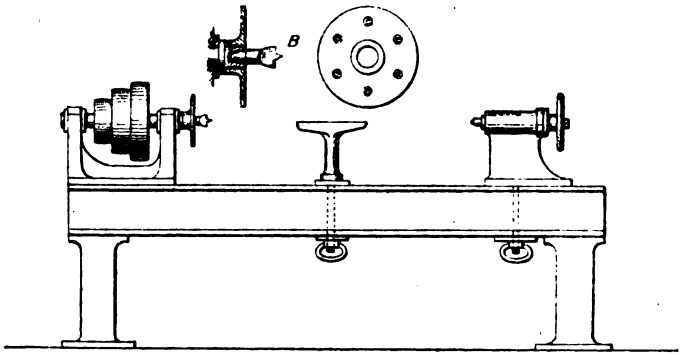

Fig. 59.

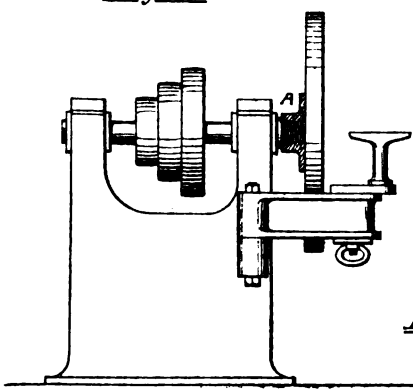

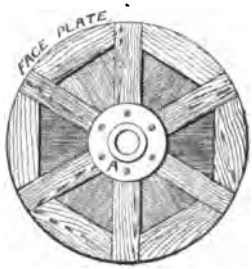

Fig. 60.

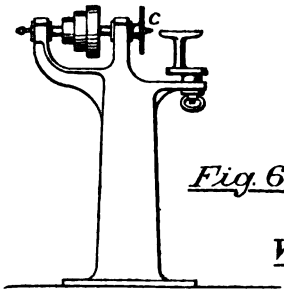

Fig. 61.

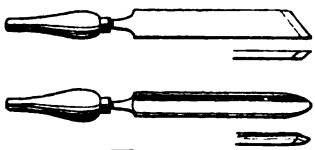

Fig. 62.

Wood-turning Lathes.

Digitized by Google

some parts of a pattern by lifting portions of sand on plates or '*drawbacks.*' An example often quoted, and a very good one for purposes of explanation, is that of a lathe bed.

Fig. 62*a* shows a section of the pattern lying in the mould. The bed is reversed, so that the planed surfaces shall be free from

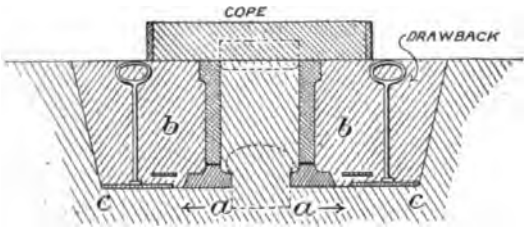

Fig. 62a.
Lathe Bed.

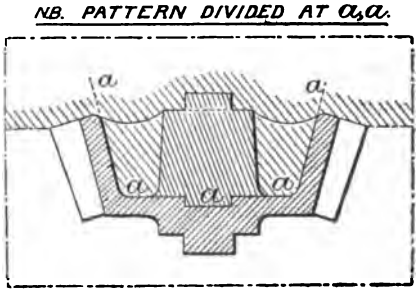

Fig. 62 b.
Bevel Pinion.

scum; and these surfaces are in the pattern made loose pieces *a a*. The upper portion of the pattern can be easily removed, but the problem is to withdraw the pieces *a a*. This can only be achieved by building the sand at *b b* on plates *c c*, provided with handles, by which they and the sand upon them may be removed, after the

Digitized by Google

upper portion of the pattern has been taken away. The pieces *a a* may now be withdrawn in the direction of the arrows.

Of course the middle space in the pattern might have been taken out by means of cores, as suggested by dotted lines, and this example has been introduced to show how necessary it is for the pattern maker to carefully consider the best way of moulding the object in hand before commencing to make his pattern.

A difficult case may always be overcome by the use of either loose pieces or drawbacks, or by coreing, but if there should be too much of the former to do, the latter had better be resorted to. In the case of the pulley in Fig. 11 we have ingenious but difficult moulding, and many would prefer to have a print in the pattern, and a core box from which to mould the hollow.

While speaking of loose pieces it may be mentioned that for safety of withdrawal some portion of the pattern is often left loosely attached, although not apparently necessary. In Fig. 62*b* the boss and arms of the bevel pinion are loose, and are taken away with the top box. The two portions of the pattern may then be withdrawn without risk of breaking away the narrow portions of sand *a a*.

Pattern Building.—The pattern is first pencilled out, full size, on chalked boards, and with sufficient 'views' to make the subject clear. Core prints, core boxes, &c., are also supplied in the drawing, and taper given to all faces parallel to direction of withdrawal.

All surfaces to be machined should have an allowance of one-eighth of an inch for iron or steel, and for brass one-sixteenth of an inch. These amounts vary somewhat in special cases, as for example in a long bed plate, where three-eighths of an inch or more may be required on account of the probable warping of the casting. An upward camber of one-eighth of an inch per six feet is given in patterns for lathe beds.

In small cylinders one-eighth of an inch all round the bore would be sufficient, but large cylinders would need a quarter of an inch.

Some ingenuity has to be used in the building of patterns. If they are carved out of the solid they have more chance of warping, for

Digitized by Google

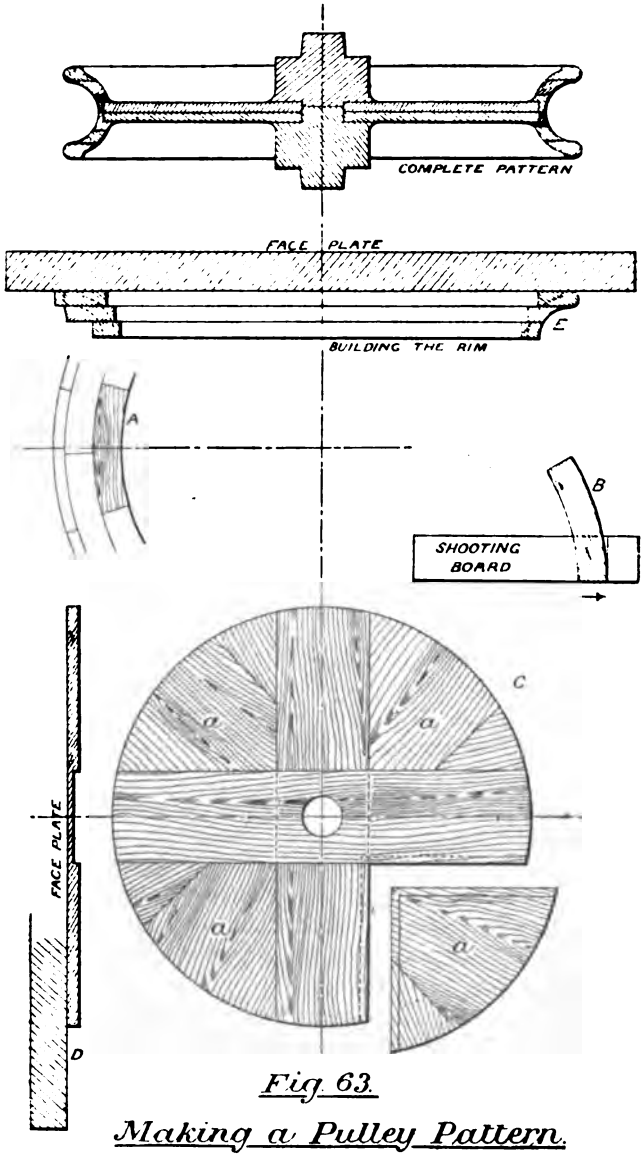

Fig. 63.

Making a Pulley Pattern.

Digitized by Google

reasons which have been previously mentioned, and so, patterns of the larger kind at least, are made of layers well glued together. Fig. 63 represents the making of the pattern for the pulley shown in Fig. 10. The rim is first built on the face plate of the lathe in the following manner:—

Pieces of wood of the form shown at A being sawn to shape, are truly planed on one side at least, and also at the ends, by the help of a shooting board B, which is used as a guide; they are then fitted together to form the first layers of the rim, by glueing to the face plate, taking care to put a *strip of paper between*, which is always done when work is to be afterwards removed.

When dry, this layer is turned to a true plane, and another superposed in a similar manner, but so as to 'break joint,' and so on; the whole is lastly turned on the face E, and, being carefully removed, is reversed, and again turned on the back side. So much for the rim. The plate of the wheel is next formed, as at C, by halving one plank over another at right angles, these being grooved to receive the filling quarters *a a*; the plate is next bored at the centre to receive the boss, and turned on the outside (*see* D). A rabbet having been formed in the rim to receive the plate, one half of the pattern is complete.

Fig. 64 shows the halving for a pulley of six arms, each batten being cut to a fraction of its depth indicated by the figures; and Fig. 65 shows the method used for five arms, the boss being required for fastening purposes. These are for the arms themselves.

The upright ribs, used to strengthen such arms (*see* Fig. 12), would be halved on their narrow edges, and the boss filled in by segments as at E, Fig. 65.

Pipes.—Patterns for small pipes are made out of the solid, but those of a large size are built up as in Fig. 65*a*. Polygonal half discs are placed at either end, and at intervals. Upon these are carefully fastened with glue (and screws if necessary) the pieces forming the rim. The two surfaces A and B being made true planes, the half pipes are glued together with paper between, and, having dogs driven in at the ends C, are centred in the lathe, Fig. 59. If flanges are needed the ends would be turned as in Fig. 66, and the flanges fitted in the manner shown.

Bent pipes cannot be built in this way, on account of the

Digitized by Google

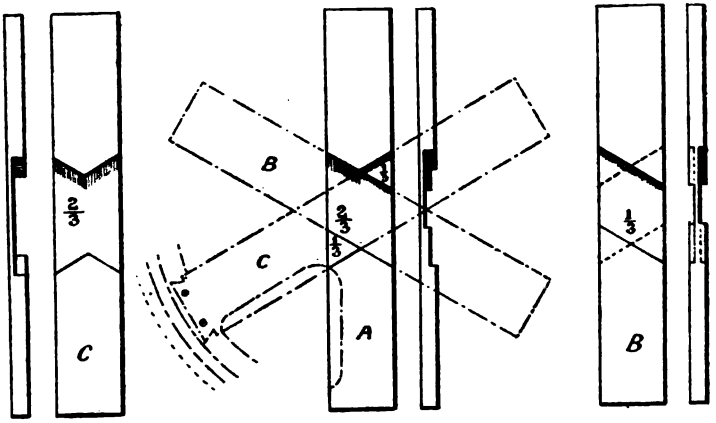

Fig. 64.

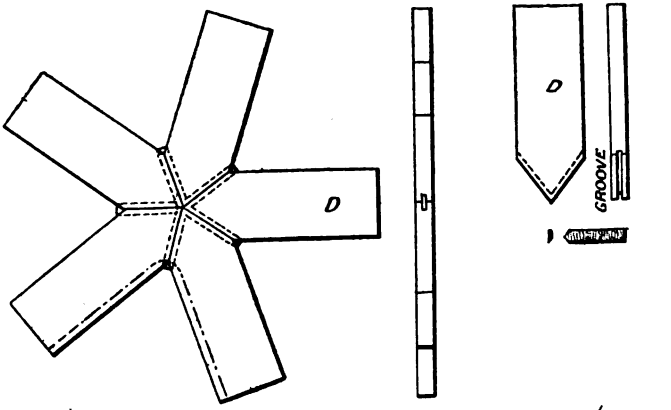

Fig. 65.

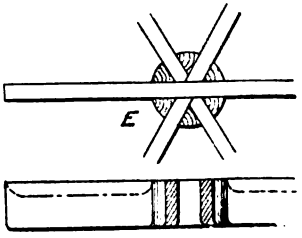

Methods of joining Wheel arms.

Digitized by Google

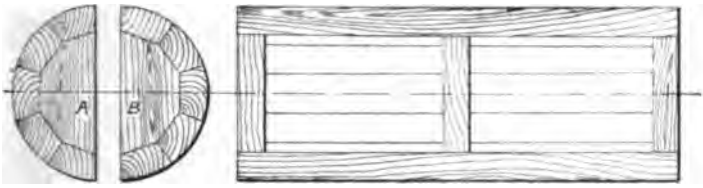

Fig. 65a.
Straight Pipe.

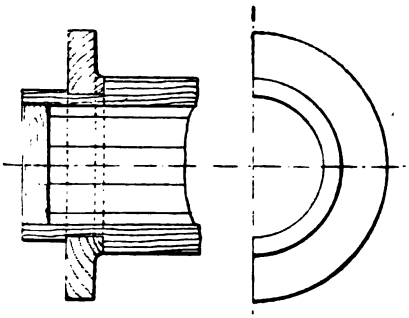

Fig. 66.
Fixing flanges.

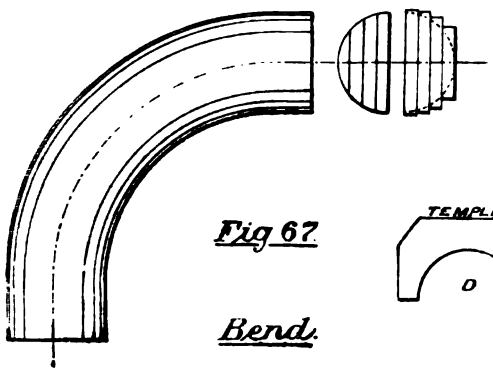

Fig 67.
Bend.

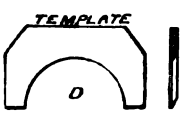

impossibility of bending each lath of wood; they are therefore made as in Fig. 67, which shows a plan and end view. In the example shown, the pipe must be worked out by gouge and spoke-

Digitized by Google

shave, and tried from time to time by applying the template D; in fact, working in wood much as the moulder works in loam at Fig. 25 in the last chapter.

A still more handy way of making quarter bends is to turn a built-up ring of semi-circular section on the face plate of the lathe, Fig. 60, and afterwards to cut into four equal pieces, as shown in dotted lines, Fig. 67A. On removing and placing back to back,

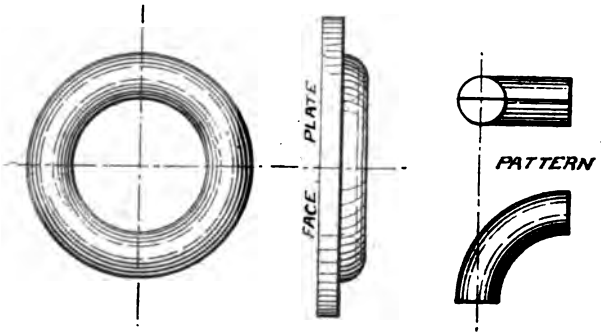

Fig. 67a.

Quarter Bends.

we have clearly two complete patterns, and flanges may be added as necessary.

If a single bent pipe—of whatever form of bend (so that it be in one plane)—is required, it should be moulded as at Figs. 25, 26, or 26*a*; the pattern maker will supply the necessary templates. Curiously shaped pipes, of varying bore, may have a core box only; the outer pattern being built by the moulder, who lays thickness pieces on the core, smoothing off with loam; after taking an impression, the thickness pieces are removed (*see* description to Figs. 25 and 26).

Joints.—Many other methods of jointing, besides halving and rabbeting, are, of course, used, such as dovetailing and tenoning, but we must content ourselves with a general notion of the making of a pattern.

Varnishing.—When finished and sand-papered, the pattern

Digitized by Google

s carefully varnished so as to preserve it from moisture, and present a smoother surface to the mould.

Core Boxes.—The simplest kinds are such as are shown at Figs. 8, 10, and 14, where half the core lies in each box. Pegs to unite them are formed by knocking rough rods of wood through the steel plates, Fig. 68, and then driving these into holes in the core boxes (see *a*, Fig. 69). The pegs need not have more than a quarter or five-sixteenths of-an-inch projection, as, if they are longer, they may stick. The exact correspondence of peg and socket is found by pressing some little object, such as a pinhead, between the boxes, and using these marks as centres. Pegs are also required to unite the halves of patterns. Wooden pegs are now greatly superseded by brass dowels (Fig. 68*a*).

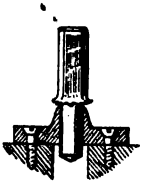

Fig. 68. Making pegs.

The hollows of cylindrical core boxes are gauged by the use of a property of the semi-circle—viz., that the angle contained by it is always a right angle. So that the box may be gouged out as in Fig. 69, and tried from time to time with a set square.

More complicated core boxes have been already drawn at Figs. 30, 31, 33, and 41. The last one may be noticed as a case of a box that must be loose on every side in order to effect the safe removal of the core.

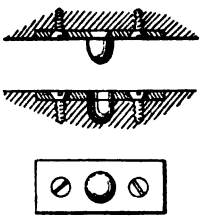

Fig. 68a. Brass dowels.

Core Prints.—At this point we may consider shortly the different kinds of core prints.

Simple cylindrical core prints are shown at Figs. 10, 15, 18, 37 : they require a slight taper in direction of withdrawal. Sometimes it is necessary for economy to core the bolt holes in the flange of a steam pipe, especially if the holes are to be square. A little consideration here of direction of withdrawal will show that, if we used prints, they would need to be of a very special kind, so they are usually dispensed with altogether,

Digitized by Google

and a template given to the moulder of the shape shown at Fig. 69*a*.

The cores, of a length equal to the thickness (full) of the flange, are pushed down to their place, and held there by friction.

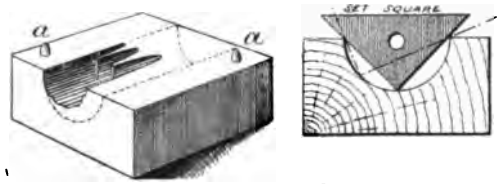

Fig. 69.

Gouging Core-box.

But a case similar to the above might occur, when, on account of the weight of the core or the accuracy required, it might be advisable to have prints, and as plain cylindrical ones would not

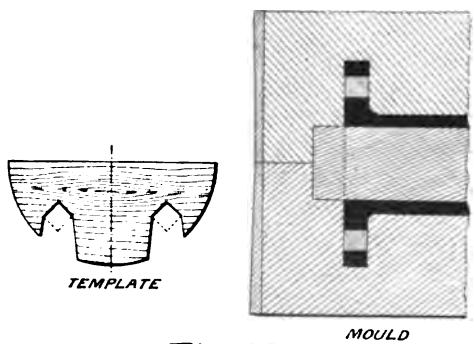

Fig. 69a.

Bolt-hole cores.

draw, as previously stated, we are obliged to have recourse to the 'tail' prints in Fig. 69*b*. Here A represents the pattern with its prints, B is the core box for the hole, and C represents the finished mould. The portions *b b* are to be filled in by the moulder either by hand, or in the case of a difficult shape, by cores made from boxes.

Digitized by Google

Yet another form of print is required, where the core can be supported at one end only. That part of the core lying in the print

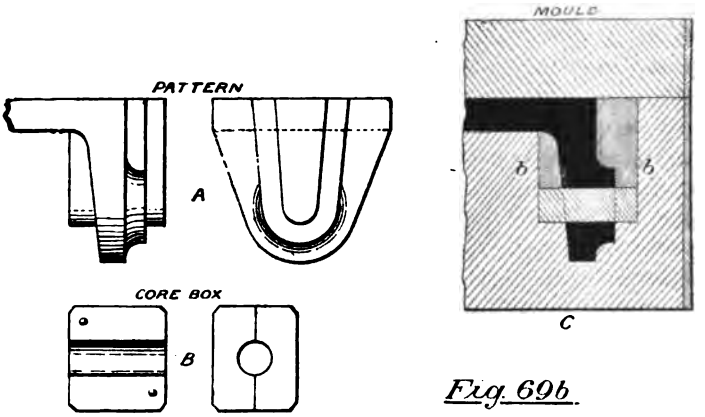

Fig. 69b

Tail Prints.

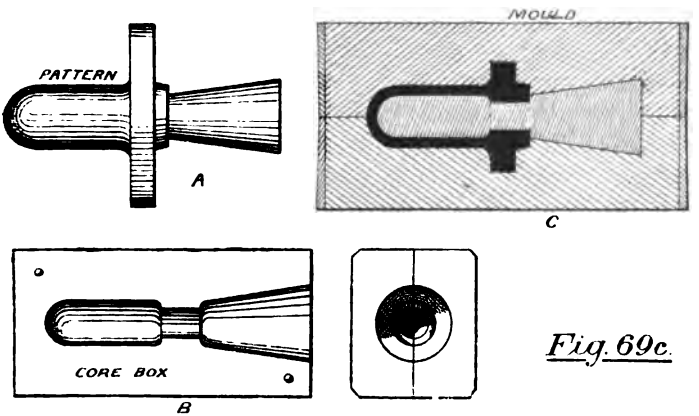

Fig. 69c.

Dummy Gland with Balance Print.

matrix has then the whole weight of the core to support, and must in consequence be large enough for balance. Fig. 69*c* will explain

Digitized by Google

what is meant: where A is the pattern, B the core box, and C the mould, the object being a 'dummy' gland for a steam cylinder.

Referring again to the **Worm Wheel** in Fig. 12, the method of making the pattern will be understood by the help of Figs. 70, 71, and 72. It may be built in the way shown for the pulley in Fig. 63, and, after being turned on the rim, blocks of hard wood are fitted on each half of the pattern, and glued in the manner suggested at D (Fig. 72).

The outside surface of these blocks is now turned so as to give a solid rim of wood, from which the teeth are to be cut. To do this a stud A, Fig. 71 (on the table of a wood-working machine), is fixed at the angle of the worm thread, and the wheel pattern set upon it, so that it can be rotated carefully the amount of the pitch, by gearing, much on the same principle as in a moulding machine. A revolving cutter B, driven at from 2,000 to 3,000 revolutions per minute, is advanced to the pattern, and cuts out the space between the teeth; the diameter *d* of this cutter must be the same as that of the worm. When this operation is completed, the wheel is removed and placed on stud C, Fig. 72. The wrought-iron worm intended to work with the casting, being marked with red ochre, is now advanced, together with its wood bearings, to gear with the pattern, and the worm is rotated; then, wherever a little mark is left by contact of the worm, the wood is gouged away until a perfectly correct fit is obtained.

Spur Wheels too small to make by machine moulding may have their teeth formed by the revolving cutter shown at B, but of course, in that case, the axes of wheel and cutter are at right angles.

For machine-moulded wheels, either spur or bevel, the moulder is to be supplied with a block of pine with two teeth dovetailed in harder wood, as in Fig. 72*a* (the machine is shown at Fig. 46).

In both sketches the direction of withdrawal is shown by the arrows, and it will be seen that, although the bevel teeth withdraw without difficulty, there would be some risk of the sand sticking to the pattern in the case of the spur teeth, which are made truly perpendicular and without taper. To avoid such an accident a finger bit A is provided, which, fitting in the hollow between the two teeth, presses down the sand as the block is lifted.

Digitized by Google

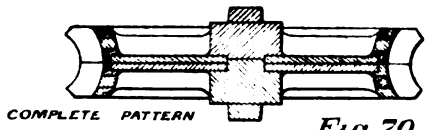

Fig. 70

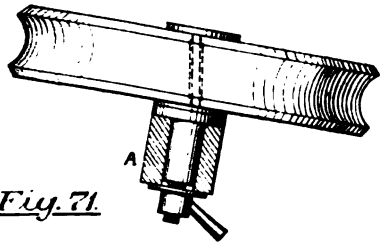

Fig. 71.

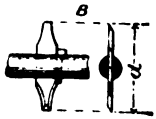

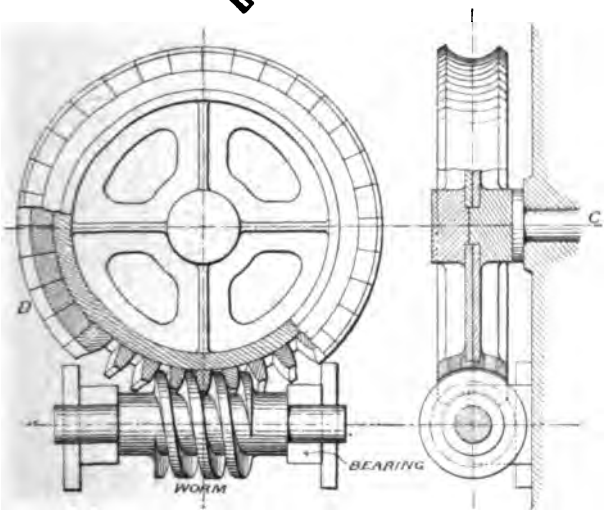

Fig. 72.

Warm-Wheel Pattern.

Digitized by Google

In Fig. 72*b* we have the core box required for the arms of a machine-moulded spur wheel; its description will serve also for bevel wheels. A represents the casting to be obtained, having six arms, and the box at B is so designed as to core out a space of one-sixth of that within the wheel rim. The box being in the

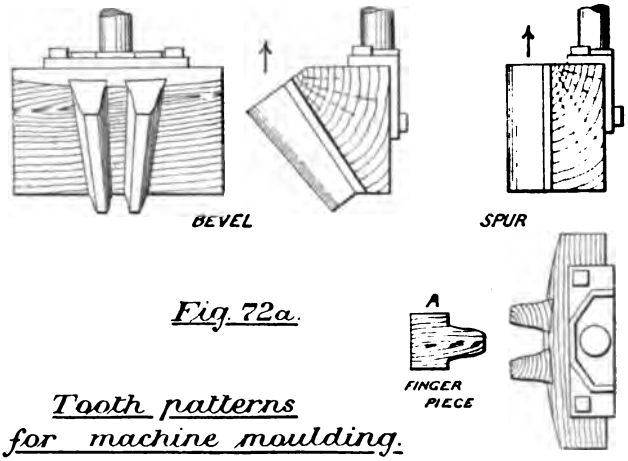

Fig. 72a.

Tooth patterns for machine moulding.

foundry is placed on a true table *a*, and after filling with loam, is smoothed off with straight-edged batten at *b*. Six of these cores being dried and blackwashed, a pattern for the boss of the wheel is now necessary to complete the mould.

Small **Bevel Pinions** require the patience of the pattern maker. Referring to Fig. 73, which is the section of a bevel pinion, it will be seen that the teeth vary in size from A to B, and must, therefore, be entirely gouged out by hand. The body of the pattern is carefully turned as at C C, while blocks D, for the teeth, are planted on in hard wood and again turned, as in the last example. The section of the tooth now being set out by compass or template at A and B, the teeth have to be cut out and finished by hand. The teeth at B are made correctly lineable with those at A by means of the wooden spindle E, carrying a straight edge F so cut as to be always truly radial when moved round the surface A B.

Digitized by Google

All wheels of strange form, such as worm wheels and helical wheels, should really be formed by templates at different planes of section, viz., at top, bottom, and centre of tooth, but more will be said of the shaping of wheel teeth in Part II.

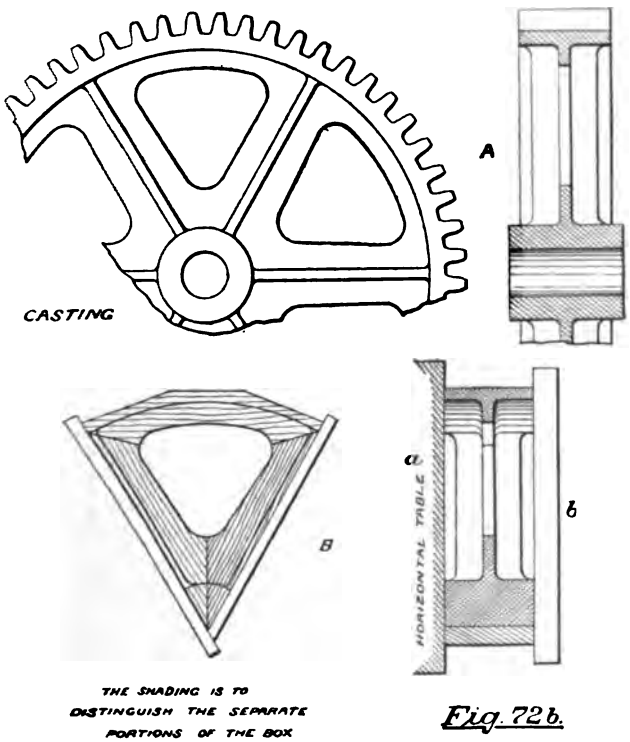

Fig. 72b.

Core boxes for wheel arms.

Striking, strickling, sweeping, or **Loam Boards**—various names for the same object—are the only remaining patterns that need mention. They should be bevelled off at the striking edge, and their various forms can be readily grasped by reference to Chap. I.

Digitized by Google

Contraction of Castings.—This is a subject involving both thought and practice, and although a few general rules can be given, success depends on very many points. It has been previously mentioned that the moulder raps the rod that draws the pattern from the sand. This rapping taking place in a

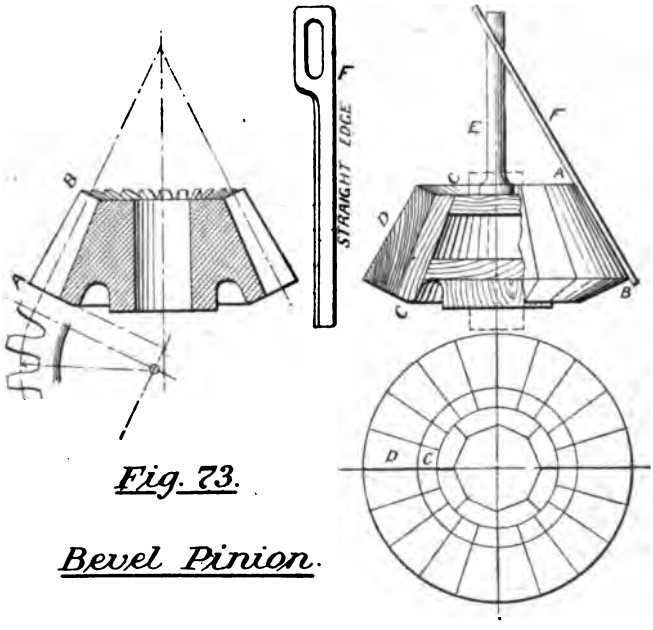

Fig. 73.

Bevel Pinion.

horizontal direction, it is evident that the sides of the mould only are affected by it.

The pattern maker must not only take account of this, but also of the particular moulder he has to deal with, for some moulders lift a pattern with less rapping than others. In small castings, up to about six inches across, the enlargement of the mould by rapping will be about compensated by the shrinkage of the casting; but in large moulds, the amount of shrinkage will be so much greater than the effect of rapping, that the latter may be entirely overlooked, account being taken only of the in-

Digitized by Google

crease in size of pattern necessary to compensate for contraction. Patterns two to three inches across, or less, should be made about $\frac{1}{32}''$ smaller to allow for rapping only, and as this does not take place in an upward or downward direction, there should always be full allowance for contraction at these places.

The greatest shrinkage due to cooling will usually occur where there is the greatest body of metal, and use must be made of this knowledge by the pattern maker.

The linear contraction for different metals is as follows: —

Cast Iron	$\frac{1}{8}''$ per foot	=	·125″
Brass	$\frac{3}{16}''$ „	=	·187″
Gun Metal	$\frac{1}{6}''$ „	=	·166″
Steel	$\frac{3}{16}''$ „	=	·187″
Malleable Cast Iron	$\frac{3}{16}''$ „	=	·187″

Spur wheels about 2 ft. 6 in. diameter, contract $\frac{1}{32}''$ per foot, and such wheels vary their contraction, increasing to $\frac{1}{10}''$ per foot for a wheel 10 ft. diameter (Box).

Three-foot rules are used to facilitate pattern work, longer than the ordinary rules by the above fractions, and are called 'Contraction Rules,' but care must be taken that entire reliance be not placed upon them.

When wooden patterns are made, from which are to be moulded metal ones, a double contraction should be allowed, on account of the two mouldings necessary to produce the required casting in the first case, and the consequent double shrinkage.

Metal Patterns are required for light work or when a great length of service is required. Such patterns are usually the same as the wooden ones from which they are made; but there are other examples of moulding with iron or brass patterns, as in **Plate Moulding.** This is handy for such small articles as occur in a brass foundry; Fig. 73*a* will show the method. A wrought-iron plate *a* is provided with half patterns on either side, made in brass and carefully finished. Prints are run for connecting each pattern, so making channels for the flow of the metal. The plate also has corners *b b*, so that when put between the boxes *c c*, and rammed up with sand, exact correspondence of the boxes is obtained. Except for blackening and fixing of

Digitized by Google

pouring gate, &c., the mould is now complete, and will, no doubt, be admitted as economically made. Of course this method will serve only when a large number of castings are required of the same kind.

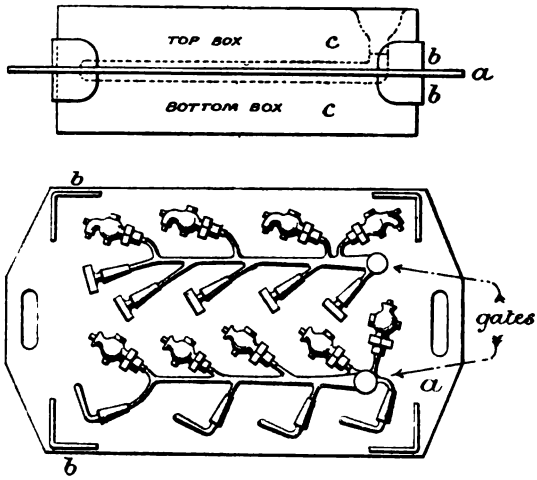

Fig. 73a.

Plate Moulding.

Stopping-off is a process which often serves to utilise a pattern temporarily for a slightly different purpose to that first intended, and so to effect economy. A simple example will suffice.

In Fig. 73*b*, a pipe pattern with flanges is shown; we will suppose a shorter bend is required.

All that is necessary is to fix a flange on at A, and provide a stopping-off piece B of the same size as the flange, having a print attached for the core.

C represents a plan of the mould, with the stopping-off piece in position; the portion D being filled up by the moulder. The rest of the moulding will be easily understood.

Digitized by Google

In the propeller which we moulded in our last chapter (Fig. 35) a screw template was placed outside the mould. There are cases, however, when a screw is to be moulded in loam, but

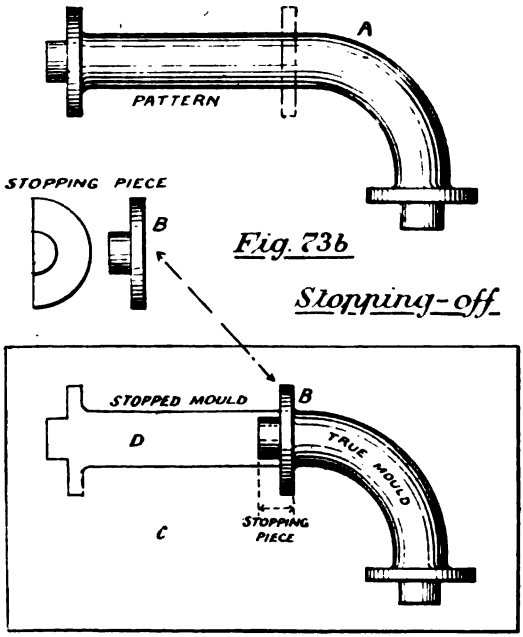

Fig. 73b

Stopping-off

where the course mentioned cannot, for certain reasons, be followed. Such is shown at Fig. 73*c*.

A Chain Barrel for a crane is formed with a helical groove to receive the chain. A is the casting required; B shows the striking out of the loam, and C the finished mould. The only portion requiring explanation is the screw *d*, made of hardwood. It is fixed to the bottom plate, and has the same pitch as the chain groove, though, of course, a more abrupt rise (for this reason made as large as convenient). The striking board runs on the screw, being supported by a roller, and balanced by weight, as in the case of the propeller.

Digitized by Google

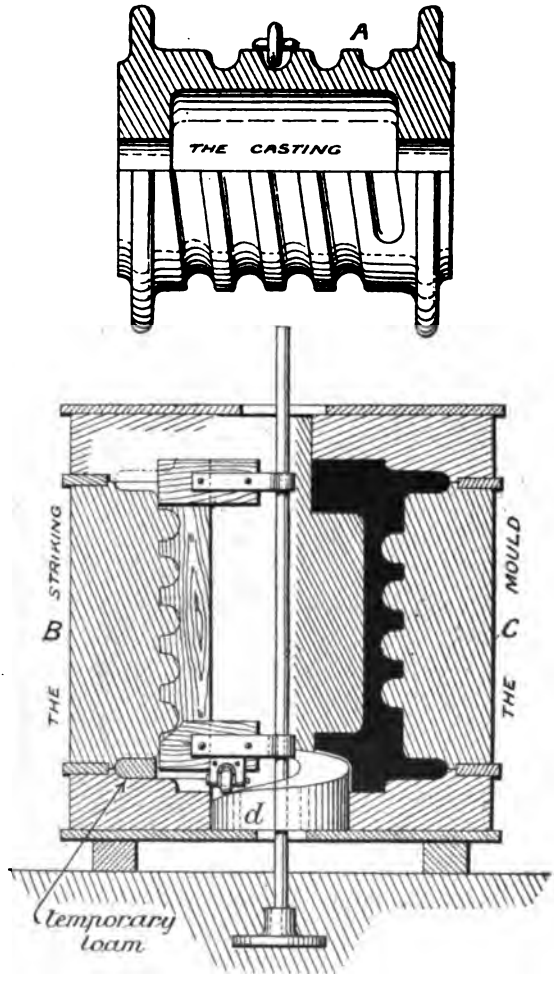

Fig. 73c.

Chain Barrel in Loam.

Digitized by Google

The rest of the mould is self-explanatory with what has gone before, and is entirely formed by loam boards.

Rapping plates have become a necessity in order to prevent injury to the pattern by the moulder. They are shown at Fig. 73*d*, and are screwed to receive a lifting rod as there shown.

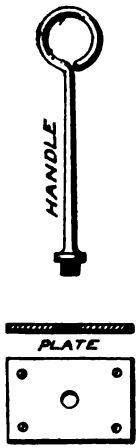

Rapping Plate.

Fig. 73d.

Crystallization of cast iron. — During the cooling of a casting the crystals arrange themselves in lines perpendicular to the surface, but the interior portion, being cooled more slowly, preserves its granular nature. Fig. 74 will show the appearance of a bar of cast iron when broken longitudinally (the student should clearly understand that the markings are exaggerated).

If the corners of the casting are made quite sharp the crystals will be abruptly turned at these places, and, meeting each other also abruptly for some distance below the surface, namely, as far down as they are formed, will create a *line of fracture* or portion weaker than the rest. Whether these corners be external or internal, matters not; the same thing happens. Fig. 75 shows other examples having 're-entrant angles,' as they are called, A being a circular boss cast on a plate, and B a cylinder with flanges. It will be clear that breakage would always occur more easily at these sharp angles.

When the Menai Bridge was built, the hydraulic press made for the purpose of lifting the 'tubes' had a flat bottom with pretty sharp corners, as will be understood from Fig. 76, which is a sketch of the press first used. Stephenson took the precaution of building up at each 10 inches of lift, and, had it not been for this, great damage might have occurred, for the bottom of the press suddenly gave way, and the tube fell through a space of ten inches. Fig. 77 represents the press since adopted, the crystals being allowed to take a gradual turn, so as to leave no line of fracture.

Digitized by Google

It is a general law that there should be no abrupt corners in a casting, either external or internal, principally for the reasons

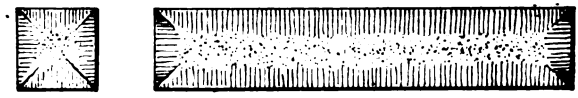

Fig. 74.

RE-ENTRANT ANGLES.

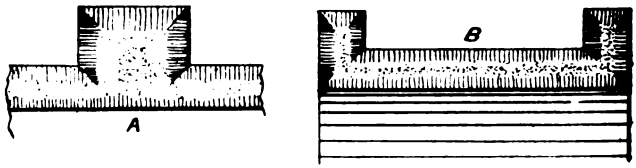

Fig. 75.

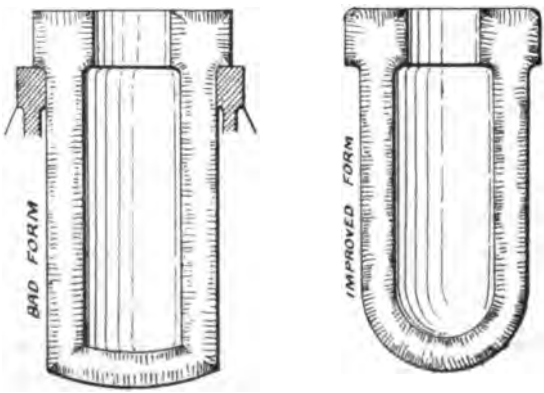

Fig. 76. *Fig. 77.*

Crystallization.

already given, and also to permit of an easy flow of the metal, and prevent the breakage of corners of sand.

Digitized by Google

Warping and Shrinkage of Castings.—The general effects produced by unequal shrinkage during cooling should be well understood in designing a casting. These may be pretty well arrived at by the consideration that, other things being equal, those places will cool last where the largest amount of metal is aggregated. Our first rule, therefore, is to endeavour to keep the casting uniform in thickness. For unequal cooling is sure to produce internal strains, and *that portion cooling first will set, and be compressed by the contraction of the part that is still cooling.* Besides, if a thin part join a thick part very abruptly, the cooling may produce such strains as to break the thin piece away altogether. We ought therefore to make the juncture of unequal thicknesses as *gradual* as possible.

Take a **Plate,** Fig. 78, lying on a surface of sand. The top part cools first, on account of being open to the air, while the under surface is still in contact with the hot sand, and the effect of cooling is to make the plate convex on the upper surface, by the after contraction of the lower surface.

In a **Hollow Cylinder,** Fig. 79, the heat cannot pass through the core so quickly as it can from the outside, so the latter cools first, and the cylinder is made barrel-shaped by the contraction of the interior. We must also note that the outer layer will be in compression (see Fig. 83), which is a cross section.

A **Solid Ball** will be found porous on the inside, if broken, because the shell sets first, and the internal metal, being thus held fast, is bound to leave vacuities on shrinking.

A **Girder** of the form sketched in Fig. 80 will curve longitudinally in cooling, for here the most metal is collected in the larger flange, and the casting is therefore pulled together on that side, after the top web has cooled.

A **Pulley** with a thin rim, as in Fig. 81, will cool last at the centre boss, and so produce a compressive strain in the rim; if therefore a piece were broken out at A it could not be returned.

Shrinkage occurs while the metal is cooling from a red heat downward, and the moulder can do a great deal to prevent it occurring unequally by uncovering at the red-hot stage those portions of the casting which are likely to retain heat longest, and by keeping others covered, for equal cooling means equal shrinking

Digitized by Google

Fig. 78.

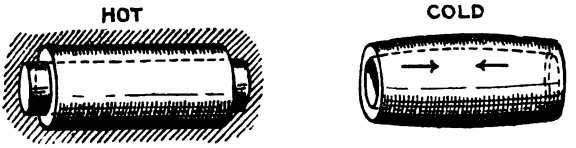

Fig. 79.

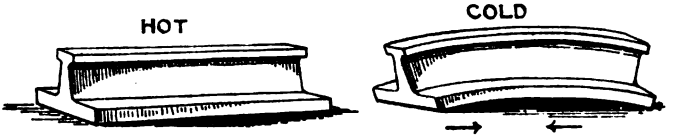

Fig. 80.

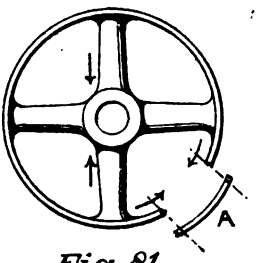

Fig. 81.

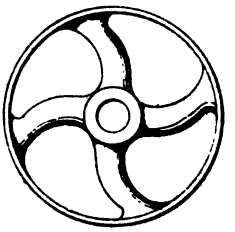

Fig. 82.

Fig. 83.

Unequal Shrinkage in castings

Digitized by Google

Hollow cylinders of all kinds are better moulded by inserting an iron tube in the core, through which cold water is allowed to circulate, and this can be so regulated as to produce a tensile strain on the outside metal if needed, or, what is better, no strain at all.

The pulley previously mentioned can be improved by curving the arms, as in Fig. 82, thus giving them sufficient elasticity to take the strain off the rim; and such an example as the girder must be left to the moulder's ingenuity, the thicker portions being first uncovered, so as to cool quickly.

Of course it must be understood that a casting is never broken directly by compressive stresses, but only by tensile stresses induced by them in some other portion of the casting. Thus the pulley will break at the arms, in which a tension is induced, rather than at the compressed rim, although the latter may be thin. This observation is true for all cases.

Digitized by Google

CHAPTER III.

METALLURGY AND PROPERTIES OF MATERIALS.

IT will be well, so as to avoid repetition in succeeding chapters, to digress somewhat, in order to consider the properties, and to some extent the metallurgy of the materials used in mechanical engineering, omitting only the consideration of their strength, which will be treated of in the second part of this work.

These materials may be classified as follows:—

1. Cast Iron.
2. Wrought Iron.
3. Cast Steel.
4. Forged Steel.
5. Copper.
6. Zinc.
7. Tin.
8. Gun Metal.
9. Brass.
10. Phosphor Bronze.
11. Muntz Metal.
12. Manganese Bronze.
13. White Metal.
14. Wood.*

But we must first become acquainted with such chemical elements as are necessary to understand the processes we intend to consider. Such are: Carbon (C), Silicon (Si), Iron (Fe), Sulphur (S), Phosphorus (P), Manganese (Mn), and Oxygen (O).

Carbon is an *allotropic* element, that is, it exists under different forms, which are: Charcoal, blacklead, and diamond. The first is pure carbon, and so is coke, or nearly so. The second is not *lead*, and is also called *graphite* and *plumbago*; and the third is the crystalline form. If carbon is allowed to unite with oxygen it forms carbon dioxide (CO_2), a gas. Carbonic oxide, or Carbon monoxide (CO), is another gaseous combination of carbon and oxygen.

A chemical *combination* is the union of elements in such a way that they can only be separated by chemical action, while a mechanical *mixture* requires only mechanical means (very often filtration) to break it up.

* For further materials see Appendix II., pp. 794–801.

Digitized by Google

Silicon exists in combination with oxygen as silicon dioxide or *silica* ($Si O_2$), and is so found in the crystals of sea-sand; glass is a mixture of several silicates. It is of value in cast iron.

Iron is found in combination with oxygen, the ore being termed a ferric oxide ($Fe_2 O_3$), but it may be rendered quite pure by chemical and mechanical means.

Sulphur is well known in the form of brimstone, and is an impurity in iron, producing red-shortness.

Phosphorus is also an impurity, producing cold-shortness, while **Manganese** is of value only when mixed with iron and other metals in certain definite proportions.

(1.) **Cast Iron.**—There are seven varieties of iron ore, containing from fifty to seventy per cent. of iron in their composition. The blast-furnace (Fig. 84) is used for smelting the ore, which is

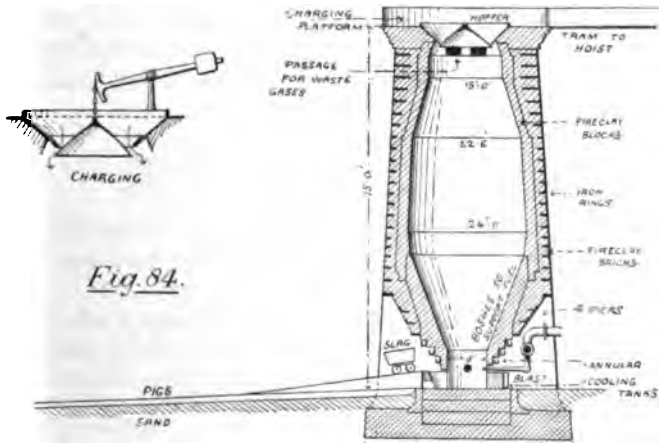

Fig. 84.

A Tees-Side Blast Furnace

done at a very high temperature, with coke as fuel, and lime or clay as a flux.* The molten iron is run into pigs, while the slag

* Lime is the usual flux, but clay is sometimes required, as in the case of hematite ore, and then is applied in the form of clay ironstone.

Digitized by Google

formed by the combination of the flux with the impurities of the ore, is separately withdrawn. (*See Appendix II.*)

The action in the blast-furnace is this:—Air being introduced by the blast to give us oxygen, and coke to provide carbon; then, if the coke be heated to redness, *carbon dioxide* is formed,

From Air.		Coke.		Gas.
$2O$	+	C	=	CO_2

As this gas ascends it takes up carbon from the coke, which it passes on its way, thus:

Carbon diox.		Coke.		Carbon monox.
CO_2	+	C	=	$2CO$

And we now have *carbon monoxide.*

Ascending further, this last-mentioned gas meets the iron ore, which is now at a great heat. The oxygen in the ore has then the choice of remaining where it is (Fe_2O_3) or of combining with the CO; preferring the CO, it forms with it *carbon dioxide* once more,

Carbon monox.		Ore.		Carbon diox.		Iron.
$3CO$	+	Fe_2O_3	=	$3CO_2$	+	$2Fe$

And the iron is now left, but in a viscous condition. As it takes up carbon, however, it becomes more fluid, descends to the bottom of the furnace, and may be then run out.

Other substances have also been absorbed, which may be seen on reference to the table at the commencement of Chapter I., shewing the general composition of the different pigs—grey, mottled, and white.

Sulphur produces red-shortness in cast iron, that is, makes it brittle when red hot, and *Silicon* and *Phosphorus* cold-shortness, or brittleness when cold.

Carbon increases fluidity at the expense of strength, and *Manganese* seems to have the effect during the smelting of inducing the *combination* of the carbon with the iron, thus tending to prevent the formation of graphite.

(2.) **Wrought Iron.**—The white pigs are broken up and subjected to the processes of *refining* and *puddling.* As, however,

Digitized by Google

these are chemically the same, and the preliminary refining is very often dispensed with, we will give our attention simply to the preparation of wrought iron by puddling.

The object of puddling is to eliminate the graphite entirely, and the combined carbon so far as to leave only about ·25 per cent., which actually increases the strength of the iron.

In the rolling mill, where the metal is rolled into plates or bars, scales of oxide of iron ($Fe_2 O_3$) are formed by the contact of the hot iron with the air. These scales, being broken off, are collected for the puddling furnaces, their use being that of absorbing the carbon from the iron, exactly in the way already described for malleable cast iron.

Being intimately mixed with the broken white pig in the puddling furnace, Fig. 85, and subjected to a powerful flame, the O from the oxide unites with the C of the iron, and passes away as $C O_2$ gas. Any silicon that is present in the iron unites at the same time with some O and forms $Si O_2$, so that the iron is left comparatively pure. During the process, the iron is in the form of a spongy mass, and absolute contact of it with the scales of oxide, now liquid, is ensured by the introduction of a long *rake* through a small opening in the side door, for the purpose of stirring the whole well together.* As the puddling nears completion, the metal is kneaded by the rake or *paddle*

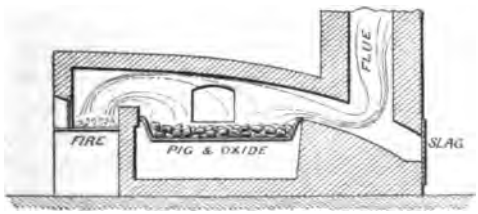

Fig. 85.
Puddling Furnace.

* To avoid hard labour and increase the output, there are many mechanical furnaces now in operation, notably Danks' Rotary Furnace, and the Pernot Revolving Hearth.

Digitized by Google

into balls or *blooms*, and these are then removed and compressed under a steam hammer by rapid blows, so as to squeeze out the slag. The blooms are next rolled out and further squeezed by being passed through the rolls of a rolling mill, giving us iron called *Puddled Bar.*

These bars are now broken up and re-worked by hammering and rolling, more or less, depending on the degree of purity and strength which is required, and we thus have the varieties of wrought iron known as—*common*, *best*, *double best*, and *treble best*, which are used for various ordinary forgings, while *Low Moor* iron is required for the fire-boxes of steam boilers and for more difficult forgings.

The purification of the iron obtained in a puddled bar is shown by the following table, which may be compared with the table showing the composition of white pig :—

Table showing chemical composition of *Puddled Bar*, in percentages.

Iron	99·31
Combined Carbon	·3
Silicon	·12
Sulphur	·13
Phosphorus	·14
	100·00

Wrought Iron during its conversion from the pig, has lost the capability of being cast into moulds, but has acquired a new nature, becoming *viscous* or sticky, and, as a result, may be worked by the smith, when white or red hot, its formation into different shapes being assisted by the property of *welding*, which as cast iron it did not possess. Repeated rolling gives a fibrous quality, making the iron both stronger and more homogeneous or uniform in texture, and these fibres may be seen on breaking a bar of rolled iron, which then has the appearance shown at A, Fig. 86, while cast iron or even puddled bar gives a granular fracture (B).

Rolling or hammering iron when cold or nearly so gives it a crystalline structure near the surface, so that T iron is not so strong as bar iron, and plates still weaker. Re-heating and slow cooling tends to remove this source of danger.

Digitized by Google

Generally, then, wrought iron is tough, and more capable of resisting vibration than cast iron, its fibrous character giving it also a distinct advantage in the direction of the fibre, which property may be made use of by judicious crossing in the operations of *piling* and re-heating the iron after puddling.

Fig. 86.

Appearance of fracture.

The best forgings are usually made by the *piling* of wrought iron *scrap*.

(3 and 4.) **Steel** is intermediate in composition between wrought and cast iron, thus:

Cast iron may have	2·2	to 5	per cent.	of carbon.
Steel (for casting)	·3	„ 1·7	„	„
Steel (for forging)	·25	„ 1·5	„	„
Wrought iron	·0	„ ·25	„	„

It will be clear, however, that the exact limits between which we may call the substance 'steel,' without intruding on either wrought or cast iron, are very difficult to define, so that we may have steel which is almost as brittle as cast iron, or we may have it on the other hand nearly as soft as wrought iron.

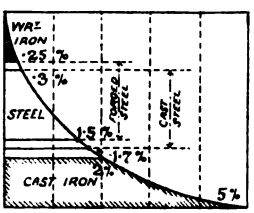

Fig. 87.

Carbon per cent.

Although steel has an intermediate composition, it has not, as we might expect, an intermediate tenacity or use, but is stronger even than wrought iron and consequently more useful. It never has, however, the toughness of good wrought iron, although many operations are performed on it to improve that quality.

It will also be readily seen that, as steel is intermediate in

Digitized by Google

composition, it may be made either from wrought or cast iron. We shall first consider the former method.

Cementation.—In this, the oldest process, bars of wrought iron are placed in fire-clay boxes, Fig. 88, with charcoal dust around and between them, and a layer of fire-clay over all (this being the *cement* giving the name to the process). Being then subjected to a bright-red heat, for a time varying with the amount of carbon required to be introduced, and which may be as much as a fortnight for the more highly carbonised steels, the charcoal has now become combined with the iron, and the steel so produced is called *blister steel*, from the fact that the bars are covered with blisters. These bars are next broken up, piled, and heated in a furnace almost exactly like the one in Fig. 85, hammered by rapid blows from a tilt-hammer, Fig. 89, and *shear steel* of a

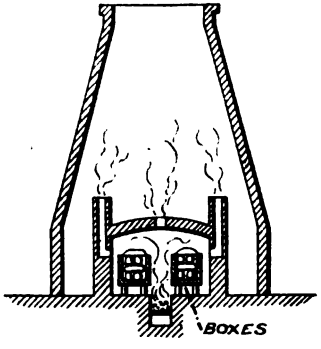

Fig. 88.
Cementation furnace.

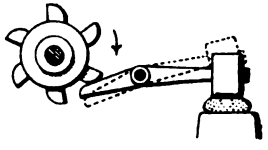

Fig. 89.
Tilt Hammer.

fibrous quality is thus produced.* *Double shear steel* is made by breaking in two and re-hammering. *Crucible cast steel* is obtained by melting fragments of blister steel in covered crucibles made of a mixture of fire-clay and plumbago, and placed in sets of six or twelve in furnaces having a similar section to the one shown in

* The steam hammer is used in recently built works. For drawing, see Chapter IV.

Digitized by Google

Fig. 50. Several of these crucibles are poured simultaneously to form the ingot, many well-drilled workmen co-operating to do it carefully. This variety of steel is much more homogeneous and has a greater tenacity than shear steel, having a fine granular structure. Brittleness is corrected, and the property of weldability restored by the introduction of manganese in the form of carbonate of manganese.

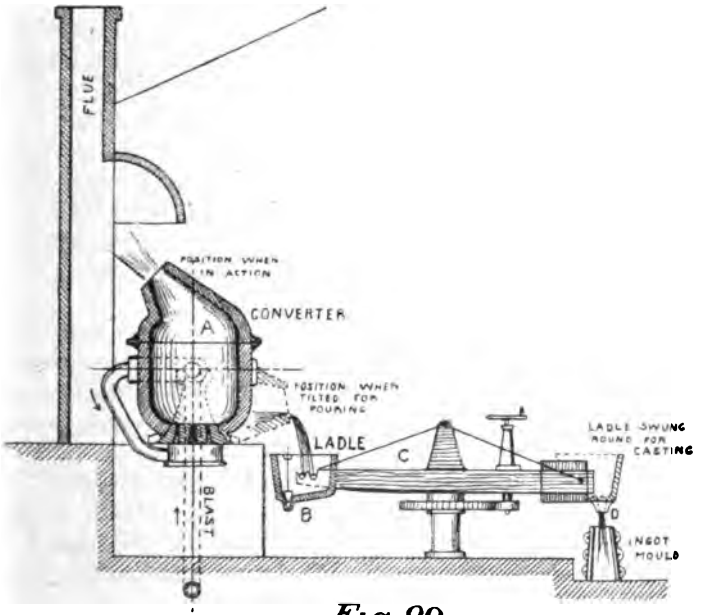

Fig. 90.

Bessemer Steel Plant

The **Bessemer Process** is used for the purpose of obtaining steel from cast iron. Fig. 90 is intended to show the necessary plant employed. The *converter* A is filled with molten cast iron, and air is blown through the metal by means of the tuyères at the bottom. The O of the air combines with the C of the iron and passes away as CO_2 gas, leaving the mass as pure iron, the silicon forming a slag (SiO_2) on the surface, which is

Digitized by Google

separately removed. The temperature must be exceedingly high in order to preserve the iron in its fluid state after the expulsion of the carbon; the entire absence of the latter is discovered by the application of the *spectroscope*, this being the most practical use of that most wonderful instrument. The next operation is the adding of so much carbon as is needed to produce the steel required, and this is done by putting into the converter a measured amount of very pure cast iron called *Spiegeleisen*,* and mixing it well with the metal by re-applying the blast for a short time. The now converted steel is transferred to the ladle B, which is swung round by the crane C, and the metal poured into the ingot through the hole D on releasing the plug at the bottom of the ladle.

The ingots may be afterwards piled and rolled as previously described, to produce a fibrous steel, and if used for forging and welding purposes should not have too much carbon in their composition; or, if required for steel castings, may be re-melted in suitable quantities, much as in the way already mentioned for cast iron.

The Siemens-Martin, or open-hearth process, is carried on in a special kind of furnace, called a *regenerative* furnace, invented by Dr. Siemens. Fig. 91 is a drawing which will show all the necessary parts. A is the hearth, sloped in the side elevation, so that the metal may run out when tapped at T. A current of air is allowed to pass under the hearth at C, to prevent the melting of the fire-clay. The combustion of a mixture of common coal gas and air is the source of heat, the arrows showing the passage to the interior of the gas through the valve G, while the air enters through the valve A. In the figure the mixture is seen entering the *right side* of the furnace. Being ignited at J by means of a red-hot bar, gradually and carefully at first, the flame is directed by the roof on to the metal, and the heat passes away by the *left side* of the furnace, returning through the valves and past the damper D to the chimney. Were it not, however, for Siemens' beautiful regenerative principle a great deal of heat would be wasted. The regenerators are shown at R R *r r*; they are hard fire-clay or silica bricks piled as a grating. The rejected heat from the hearth is intercepted by those marked R R, so that

* See Appendix II.

Digitized by Google

although the mixture enters at 700° F. the products of combustion pass to the chimney at 200° or 300° F. In a short time the bricks become white hot, and the valves A G are then reversed as is shown at v_1 and v_2, the former being the position for the action already mentioned, and the latter allowing the gas and air to

Siemens' Regenerative Furnace.

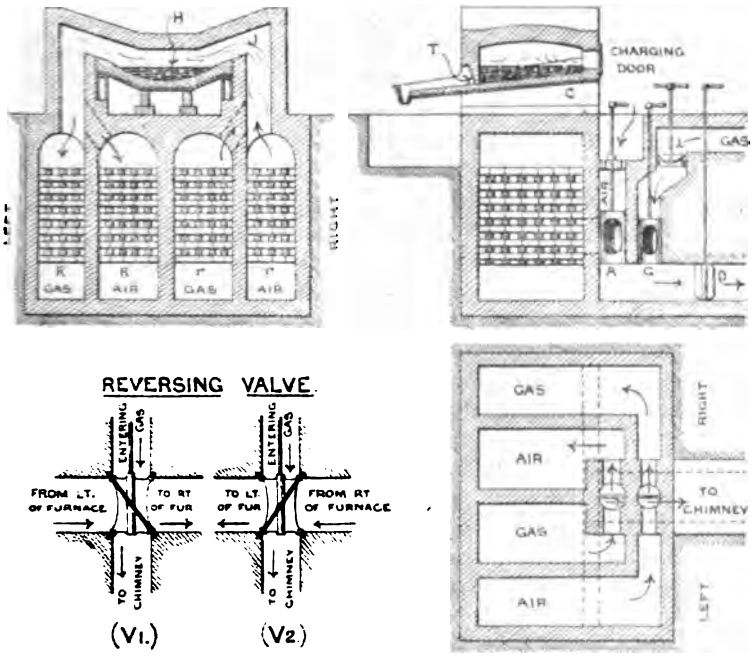

Fig. 91.

enter first the *left side* of the furnace and leave on the opposite side. Doing so, it is evident that the heat which was absorbed in the last operation by the regenerators R R is now taken up again by the entering gases, and the bricks *r r*, in their turn receive the rejected heat.

By this means a large amount of heat is made useful which

Digitized by Google

would otherwise be wasted, the valves being reversed regularly whenever the bricks acquire too much heat.

The furnace is first charged with pig iron, and when this is melted, heated wrought iron and steel scraps are added by degrees (these three in nearly equal proportions). When all is thoroughly mixed a little piece of cast iron, in the form of spiegeleisen, is added, together with a very little manganese.

Experience, the principal guide for this mixture, is again called into play immediately before completion of the operation, the foreman trying small samples taken from the furnace and cooled in water, by breaking them and examining the fracture. If satisfactory, the steel is now poured into ladles by tapping at T.

As soon as the metal ceases to flow easily it is known that there is only slag left. The ladle is then removed, and the slag allowed to run to the ground or into moulds.

The **Landore-Siemens** process, also the patent of Dr. Siemens, differs in the fact that iron ore is used direct. On being first reduced and the slag got rid of, it forms spongy balls of malleable iron, which are then dissolved in molten pig iron, spiegeleisen being added as before. It often receives the name of the 'pig and ore' process.

In the **Siemens** process the ore and flux are mixed direct with the pig; more slag is therefore produced.

Steel Castings made by any of the above methods must be annealed slowly in a closed furnace for a week or more, to prevent cold-shortness. *Honeycombing*, or the presence of vacuous spaces in the metal, is the principal trouble, and is partly prevented by the addition of silicon, as silico-ferromanganese, but is only perfectly got rid of by the Whitworth process, where the molten ingot is compressed by powerful hydraulic pressure until it is quite set. The great advantage of this compression, which amounts to from six to twenty tons per square inch, is shown by the fact that the ingot is made to contract as much as one-and-a-half inches per foot of length. The mould consists of a steel cylinder, lined with refractory material, and so constructed that when placed under an hydraulic press, the gases may escape through the sides of the mould. (*See Appendix II.*)

We may always expect highly carbonised steel to be deficient

Digitized by Google

in toughness, and therefore inferior to wrought iron in that respect. It may be improved by the annealing spoken of, but steel that is required for boiler or bridge work must be capable of resisting vibration, and so a milder quality is used, which, though it may not be considerably stronger than iron, is more homogeneous and has a finer grain.

The amount of carbon varies with the use to which the steel is to be put, and is shown by the following table :—

Razor temper.....	1½ %	Carbon	Will spoil with over-heating.
Sawfile ,, ...	1⅜ %	,, ...	To be heated only cherry red.
Tool ,, ...	1¼ %	,, ...	May weld with great care.
Spindle ,, ...	1⅛ %	,, ...	Ditto.
Chisel ,, ...	1 %	,, ...	Tough ; will harden at low heat.
Sett ,, ...	⅞ %	,, ...	Stands hammer ; welds easily.
Die ,, ...	¾ %	,, ...	Stands pressure ; welds like iron.

Cutting tools require most carbon. (*See Appendix II.*)

Tempering, or the capability of receiving any degree of hardness, is a property of steel, and was formerly applied as a test to distinguish it from wrought iron ; while *case-hardening* is the method of partially converting wrought iron into steel, but both these subjects will be reserved for our next chapter.

Test.—A rough test to distinguish between wrought iron and steel is to put a drop of dilute nitric acid on the polished metal, when a greenish-grey stain will indicate iron, and a black spot will show steel ; the purer the black, the more carbon may be suspected, so that we may even get a notion of quality.

(5.) **Copper** Ore is various in character, but may have iron, sulphur, antimony, or arsenic associated with it. The operations are three in number :—(1) *Roasting*, to get rid of arsenic and sulphur, the iron forming an oxide. (2) *Smelting*, to dissolve the iron oxide, and leave copper combined with sulphur. (3) *Roasting and Smelting*, to remove the sulphur and obtain metallic copper. The furnaces used throughout are of the same class as the puddling furnace, Fig. 85, and called *reverberatory* on account of the arch *beating back* the flame. Other refining processes have

Digitized by Google

to be gone through before the metal is considered fit for the market.

The metal thus obtained is rolled into plates and hammered to any shape. Besides its malleability it is exceedingly ductile, being easily drawn into wires; it becomes brittle if hammered cold, but its tenacity may be restored by annealing.

Copper is an expensive material, and is only used for pipes that require bending cold, and for fire-boxes, where ductility as well as power to conduct and resist heat are needed: it must be remembered, however, that copper loses its strength somewhat with increase of temperature.

It is also very useful for electrical purposes, being, next to silver, the best metallic conductor.

(6 and 7.) **Zinc** and **Tin** are of little importance singly to the mechanical engineer.

(8.) **Gun Metal** is an alloy of *Copper and Tin*, and is often called bronze. The proportions are varied for different purposes. Thus to make 100 parts :—

	Copper.	Tin.	
Soft gun metal requires	90	10	(General Ordnance purposes.)
Hard gun metal ,,	82	18	
Bell metal ,,	80	20	

Usually some zinc is added to make the metal more malleable, as :—

Copper	84·22
Tin	10·52
Zinc	5·26
	100·00

Gun metal produces fine castings, and being much stronger than cast iron, is almost the only other metal preferred besides cast steel, for the castings required in modern gunnery. It is often in its harder form made into bearings for shafts. Both strength and toughness are increased by rapid cooling.

(9.) **Brass** is made by alloying *copper* with *zinc*. The pro-

Digitized by Google

portions vary somewhat, depending on the colour and strength required.

	Parts Copper °/₀		Parts Zinc °/₀
Fine yellow brass has	... 66·6	...	33·3

The proportion of copper may vary from 66 to 70 per cent., or even higher. A little lead is sometimes added. Brass is principally used on account of its fine colour, and because it is easily tooled.

(10.) **Muntz Metal** is a brass having the proportion of 60 per cent. of copper and 40 per cent. of zinc. It is largely used for bolts in marine work that are liable to rust, and especially for pins that have to turn in their sockets, on account of its great strength, as well as the faculty of being forged, which it possesses.

(11.) **Phosphor Bronze** is, like gun metal, a mixture of copper and tin, but with the addition of a small measured quantity of *phosphorus.* (*See Appendix I.*)

Its strength is then so much increased as to be equal to that of wrought iron, and it has consequently been extensively used, within recent years, where strength is required, coupled with intricate form, such as must be cast rather than forged; as for example, toothed wheels subjected to shock. Gun metal is deteriorated by subsequent meltings, while phosphor bronze may be re-melted without injury.

It has considerable ductility, and may be formed into wire, and used for spiral springs subjected to steam or water.

(12.) **Manganese Bronze,** introduced rather later, is similarly constructed, except that manganese takes the place of phosphorus, the proportion being about 7 lbs. manganese per cwt. of bronze. The strength is thereby still more increased; and it is used now for a variety of purposes where strength and ductility are required combined, such as hydraulic pipes, which may be then drawn considerably thinner than copper ones; and it is advantageous in many other cases, as may be understood from the fact that it may be both cast into moulds and forged under the hammer. It can also be used to resist rust, so as to keep nuts and bolts free that would otherwise seize.

(13.) **White Metal,** otherwise white brass, and in America Babbitt's Metal, or 'Babbitt,' is an alloy used for lining bearings. Tin is the principal metal used, and is mixed with copper and

Digitized by Google

antimony in varying proportions, the following percentages being principally used :—

Copper	8	3
Tin	84	90
Antimony	8	7
	100	100

One advantage of white metal for bearings is that it can be run into the bracket when the journal is in place, and so ensure a good fit. It causes considerably less friction than brass or bronze.

To sum up then, alloys of copper and tin are termed *bronzes*, and may have a little zinc added up to about 1½ or 3 per cent. Those of copper and zinc are called *brasses*, Muntz metal being one of them; and those having tin and antimony, with a little copper, are *white metals*.

Brazing.—Brass or gun metal may be united by this process, which is also termed *hard soldering;* and the joint will then be as strong as the original casting.

Iron or steel may be also connected by brazing if more convenient, especially finished pieces of work. The method is to first carefully clean the work with acid, then take some brass filings and mix with powdered borax as a flux, the borax being preferably moistened with water.* The filings are placed between the parts to be brazed so as to form a joint, as much surface being used for the latter as possible, and the two are held together in red-hot tongs, having thick jaws to keep the heat. The tongs will melt the filings and grip the pieces until perfectly set, and the whole may be finished off in the vice.

If the work cannot be easily gripped, another way is to insert the filings as before, and, binding with iron wire, place the pieces in a clean coke fire until the operation is complete.

Or, still another method is to use the blow-pipe. Here a fine tongue of very hot flame is directed on to the work by blowing with this instrument through a lighted 'Bunsen.'

* More generally, instead of brass filings, 'spelter' is used, which is a powdered brass, containing about equal parts of copper and zinc, and specially manufactured for brazing purposes.

Digitized by Google

(14.) **Wood** is not used to so great an extent as formerly. Roofs are made of wrought iron; and men-of-war of iron and steel instead of oak: pillars of cast iron: while morticed wheel teeth are almost out of fashion. Brake blocks, too, are made of cast iron, to give a longer time of wear; and wooden buffer beams for locomotives are now being discarded.

Little then need be said of wood. For pattern-making, as already stated, *pine*, *mahogany*, *cherry*, *sycamore*, *lime tree*, and *walnut* are the woods used. *English oak* is the best for beams, but American oak is much cheaper, and the latter is used for the framing of railway and traction waggons, and for locomotive buffer beams. *Ash* is also much employed in waggon work, especially for cart shafts. Mortice teeth are made of *beech* or *hornbeam*. *Lignum vitæ* is of great service for bearings that are immersed in water as, for example, with the screw-propeller and some turbines.

Railway sleepers are rendered very durable by impregnation with *creosote* or black oil, air being first sucked from the pores of the wood. The creosote is then forced in at great pressure.

The following table gives the melting points in degrees Fahrenheit of the principal metals mentioned in this chapter:—

Cast Iron	2100° F.	Zinc	773° F.
Wrought Iron.....	3000° *	Tin.....	442°
Steel	2700°	Gun metal	1900°
Copper	1996°	Brass.....	1700° to 1900°

* Castings of 'wrought iron' have now been made, though the process is somewhat intricate, and has not as yet been extensively applied. The method consists principally in lowering the high melting point of wrought iron by the addition of aluminium. Swedish wrought iron is used, and from $\frac{1}{2000}$ to $\frac{1}{700}$ of its weight of aluminium is mixed with it.

Digitized by Google

CHAPTER IV.

SMITHING AND FORGING.

WROUGHT iron is formed into the required shape by *drawing down* and bending while hot; but if there should be insufficient 'stuff,' or if it should be more difficult to entirely finish by drawing down, recourse is had to *welding*.

The working of de-carbonised iron may be best treated under two heads, *smithing* and *forging*. The first includes the making of such smaller objects as can be conveniently done at a smith's fire, while the second term may be applied to the shaping of all articles that require heating in a close furnace, and finishing under a heavy steam hammer. In either case the result is denominated a *forging*.

THE SMITHY.

We will first consider shortly the plant and tools employed by the smith.

The Hearth.—This is represented in Fig. 92. A is a sectional elevation, and B a front view. It is necessary to explain here that the smith may arrange his coal on the hearth in two distinct ways, the one being called an 'open' fire, and the other a 'stock' fire. The hearth shown in Fig. 92 is by Messrs. Handyside, and is of iron throughout. It is only adapted for 'open' fire working, being short in length from *a* to *b*. *a* is the tuyère or blast nozzle, constantly surrounded by water contained in the tank *c*, so as to avoid burning at the outlet, or the accumulation of caked slag. The work to be heated is placed in the hollow portion of the hearth surrounded by coal, and as the coal burns away more is supplied from the hillock *b*. It will then be seen that there is no special difficulty in arranging the coal for 'open' fire working. 'Stock' working requires a certain amount of trouble in first preparing the coal, which is usually done first thing every morning. After this first preparation it will, however, keep in working order

Digitized by Google

Fig. 92.

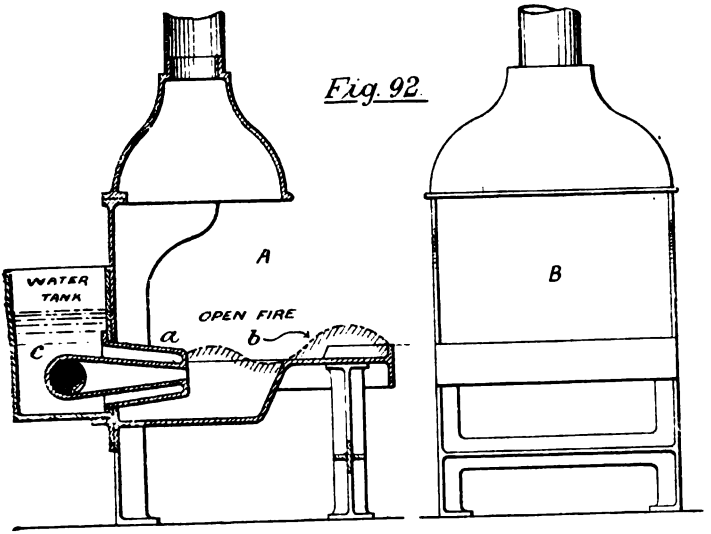

Cast-iron Smiths' Hearth. (BY AND. HANDYSIDE & Cº)

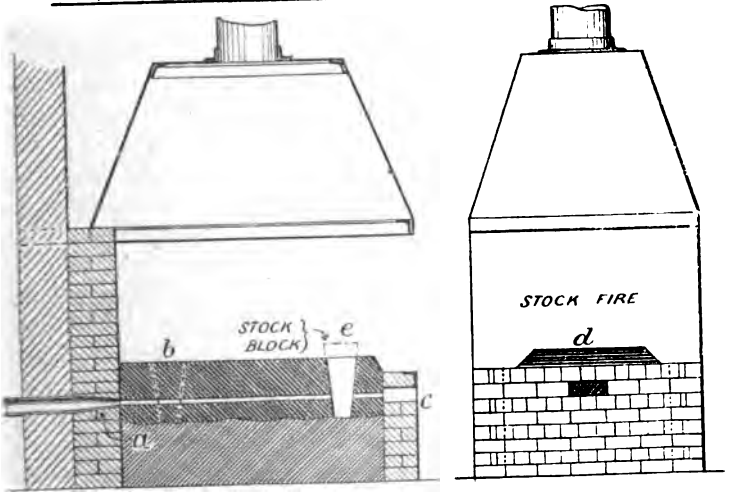

Brick-built Smiths' Hearth.

Fig. 95.

Digitized by Google

for the rest of the day, and has many advantages, as will be seen. Fig. 95 represents an ordinary smith's hearth, built up partly of brick and partly of iron. *a* is the blast nozzle, which need not now be surrounded by water, because the fire will never be nearer to it than the position marked *b*, and so no caking can happen. In building the 'stock' a loose brick is first taken out at *c*, and a bar passed through and inserted in the tuyère. The coal is now damped by sprinkling water upon it with a wisp of straw, and is built up into the form shown, the ridge *d* being neatly flatted down, by using the back of the shovel. Beginning at the tuyère and advancing frontwards the 'stock' is finished round the piece of wood *e*, which is called the 'stock block.' We may now remove both bar and block, and make the fire in the space *e*. The iron to be heated is placed in this space and covered up with loose coal, which is always brought from the front end *c*, so that the stock gradually burns away to the end *b* by the close of the day. The advantages of 'stock' working are these: (1) we need no water tuyère nor consequent attention to water supply; (2) the bar to be heated is only acted on by the fire to the length required (whereas 'open' working has a tendency to heat it to a greater extent); and the method is generally more economical.

The Blast.—Air is constantly supplied to the fire, when working, by means either of bellows, fan, or blower, one of the latter two being in use at an engineers' smithy, where all the fires are connected to one main blast pipe. Fig. 95A, Plate I., represents a fully equipped smithy, as designed by Messrs. Handyside, and fitted with their hearths throughout. The main blast pipe is shown by the dotted lines in plan.

Fig. 93 is a drawing of a **Fan** by Sturtevant. There should be a good large space left beyond the vanes, to allow the velocity energy given to the air by them to be easily transformed into pressure energy in the pipe, and so prevent waste by eddies.

Roots' Blower, as made by Messrs. Samuelson, of Banbury, is shown at Fig. 94. The air in this machine is literally scraped out of the casing on the side A, by the revolution of the two figures s s, in opposite directions, and is delivered at B, a fresh supply replacing the partial vacuum formed. The rollers, as the above figures are called, are compelled to work

Digitized by Google

Digitized by Google

PLATE I.

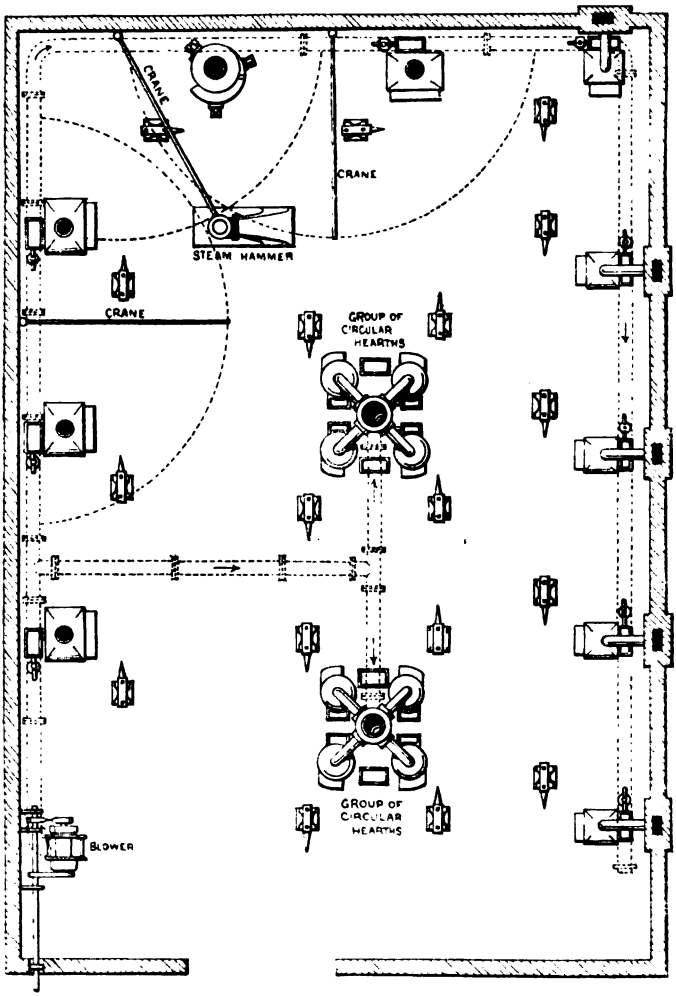

Plan

Digitized by Google

PLATE I.

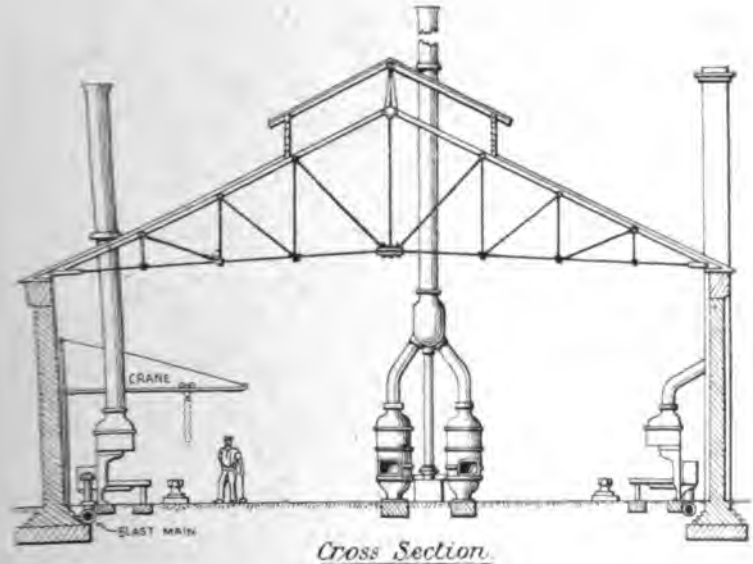

Cross Section.

ARRANGEMENT OF AN ENGINEER'S SMITHY
(fitted with Handyside's Hearths)

Fig. 95a.

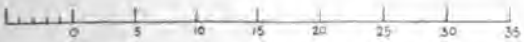

SCALE OF FEET.

Digitized by Google

Digitized by Google

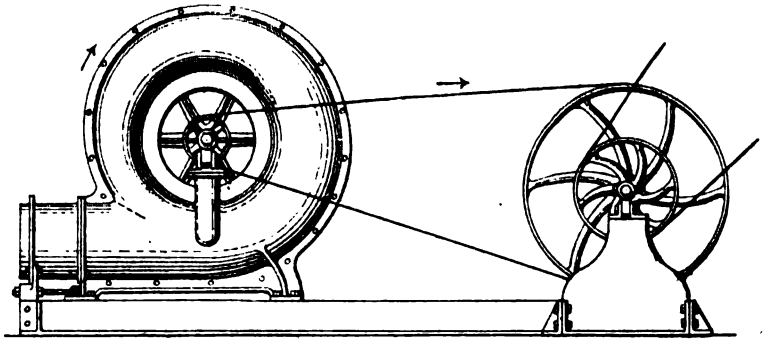

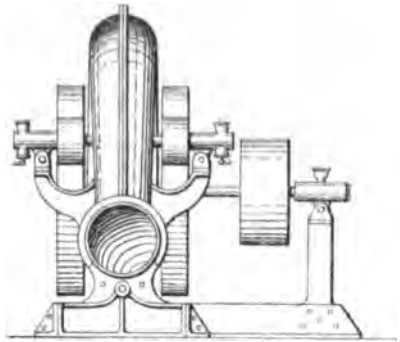

BLAST WHEEL

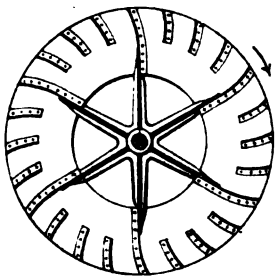

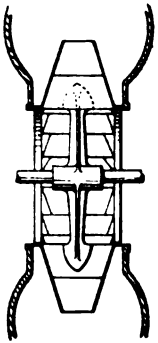

Fan for Smithy or Cupola.

(BY STURTEVANT)

Fig. 93.

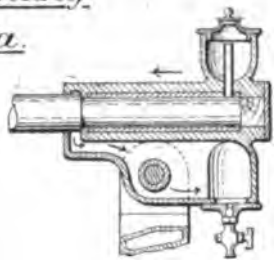

JOURNAL

AIRHOLE SHEW HOW OIL IS SUCKED INWARD BY THE BLAST.

Digitized by Google

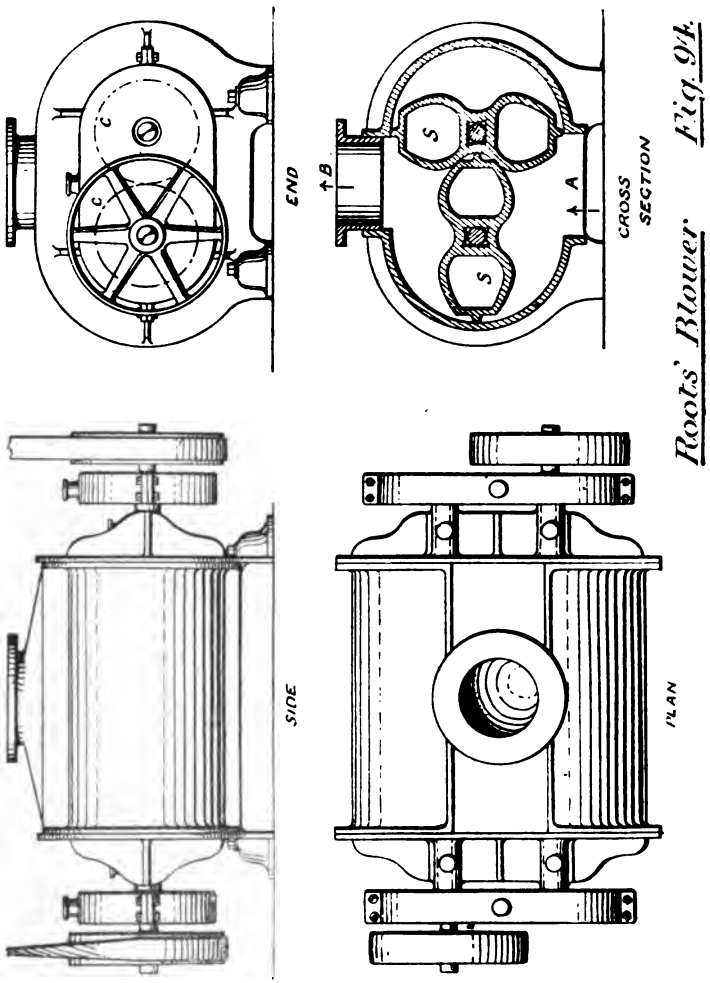

Roots' Blower. *Fig. 9k.*

correctly by the introduction of equal spur wheels, shown dotted at c c, being covered by a casing, and the shafts are rotated in opposite directions by means of crossed and open belts, as shown

Digitized by Google

in the side elevation. The power absorbed in running this machine is very slight, and the speed need not be more than 300 revolutions per minute. A fan, on the other hand, to be effective, must be driven at a great velocity, say from 1000 to 2000 revolutions per minute; more shafting and pulleys are required, as shown in Fig. 93, and the percentage of loss by friction is consequently high. The blower is, however, very noisy.

Tools.—Among these we must first mention the **Anvil**, Fig. 96. It is made of wrought iron, and has a surface of steel about a quarter of an inch thick welded on at A to form the top face; B is the *beak* or *horn*; C and D are square holes to receive 'bottom' tools, and E E are used in punching. At Fig. 96B is illustrated a French anvil. It is not provided with any holes, the swage block (described later) serving instead.

Two kinds of **Hammer** are required: the *hand* hammer weighing two-and-a-half to three pounds, for the smith; and the *sledge* hammer, used by his helper, weighing from eight to fourteen pounds, and even more. If the sledge is only worked by lifting over the shoulder, a short handle is used, say three feet long, but, when swung, in making heavy forgings, a long shaft is required, the right hand being drawn inward to the end as the hammer approaches the work, thus giving the latter the full effect of the stored energy.

Other tools, shown in Fig. 97, are principally for the purpose of finishing work for which the hammer alone would be insufficient. They often go in pairs, as *top* and *bottom* tools, the smith holding the first by means of a hazel rod wrapped round it, while the second is placed upright in one of the square holes in the anvil. A A are *chisels*, B B *fullers*, C is a *flat-face or flatter*, D a *punch*, and E E are *swages*. The last term is applied to any specially-shaped top and bottom tools designed for the purpose of finishing work with greater ease and accuracy to a particular form, such as round, hexagonal, &c. F is a *set hammer*, having either a square or circular face; it is held steadily on the work while being struck, so that in one sense it is not a hammer at all. It is convenient as a top tool to reduce work or 'set' it down, the anvil serving as bottom tool. G is a '*heading*' tool, useful in making the heads of bolts and pins. It is held by the hand at one end

Digitized by Google

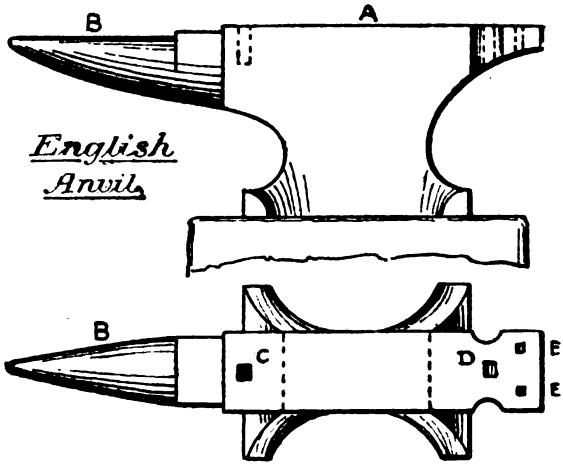

Fig. 96.

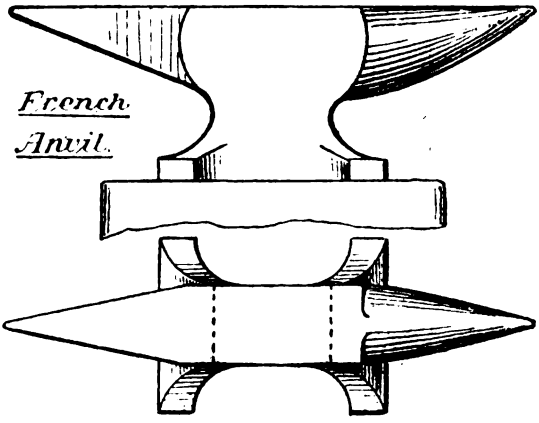

Fig. 96 b.

Digitized by Google

while the hot bolt is driven through one of the holes, and, being retarded by a slight shoulder at the end of the bolt, the head is formed at that place. The process is shown at B, C and D, Fig. 104. *Ferrules*, H, serve to stamp the bosses of small levers. Of course it must be understood that a good set of tools will include several different sizes of each of those above mentioned. They should all be faced with steel where subject to concussion.

Tongs are shown at Fig. 98, and have several different form at the 'nose' or 'bit' where the work is gripped, such as *flat nosed* tongs (A), *round-nosed* (B), or *angular-nosed* (C). They should be made to take work from a quarter of an inch to three inches thick, and all of them are more useful if bent out as at C, so as to admit a bolt-head or collar.

An important adjunct to the anvil is the **Swage Block**, Fig. 99. It can be set up in any position, and serves to finish several different forms of forging, the holes being for heading purposes. The swage block is usually made of cast iron, though cast steel is now often preferred.

The smith having to hold the work in the tongs with one hand, he wields the hand-hammer with the other, where plain forging is required, but, when top and bottom tools have to be applied, he is fully occupied with the top tool and the work to be done, so the hammering must be performed by a helper or *striker*. A good-sized forging may be made by this method, which is called '*working double-handed*,' especially by using a heavy sledge.

But a striker is sometimes dispensed with by introducing some specially-contrived, and often very ingenious arrangement to take his place. The method followed would then be called '*working single-handed*.'

Fig. 100 shows one of these tools, termed a *dolly*, and its purpose in the figure is round swaging, though other forms could be applied. It is fixed in one of the square holes of the anvil, and is struck at A with the hammer in the right hand, while the left hand holds the work at B with the tongs.

Bolts or rivets may be forged single-handed by employing the block A, Fig. 101. A stock piece, *a*, is put in the hole in the block so as to fix the length of the rivet *b*. Pieces of round iron

Digitized by Google

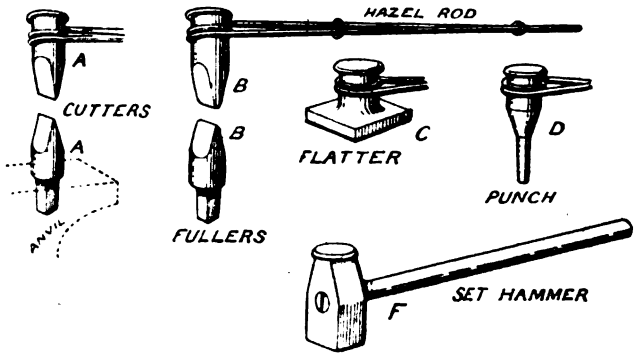

Fig. 97.

Smiths' Tools.

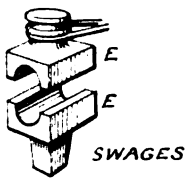

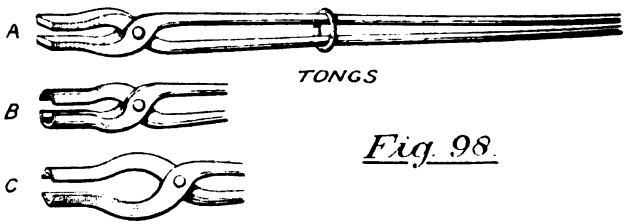

Fig. 98.

Digitized by Google

are cut off of proper length to form the rivet, and being heated, are dropped into the hole at *b*. The hammer *h* is now worked from the footboard *f*, the blow being delivered by pressing the foot downward on the latter, while the return of the hammer is ensured by the elasticity of the sapling of ash s, which is bent on each down stroke of the footboard, and in becoming straight again lifts the hammer. The correct form of the rivet head is given by applying the cupping tool *c*, held in the hand. When the rivet is finished it may be released and thrown out by striking the foot sharply on the lever *l*, which thus takes the dotted position, and the rivet can be then picked up and cooled in water.

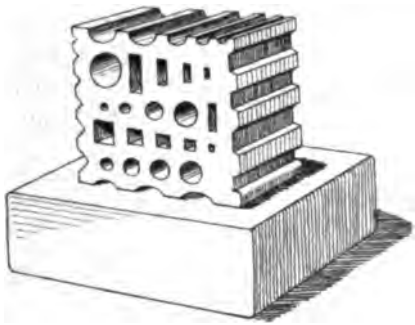

Fig. 99. Swage Block.

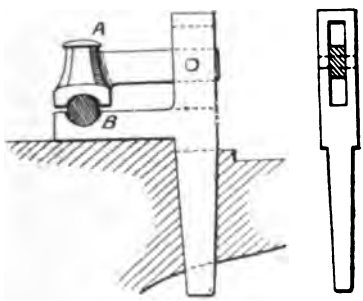

Fig. 100. Dolly.

Steam Hammer for Smithy. — Lastly, the smith requires for his heavy forgings the aid of a small steam hammer. We say 'small' to distinguish from the larger type in use by the forgeman, but the smith's hammer is anything but small. The one illustrated in Fig. 101*b*, Plate II., is spoken of as a 10 cwt. steam hammer, and this means that the piston and piston rod A A, the tup B, and the pallett C, together weigh 10 cwts. This, of course, does not take account of the steam pressure, which at 40 lbs. per square inch con-

Digitized by Google

siderably increases the falling weight. The forces of steam and gravity being constant, the velocity with which the tup reaches the anvil may be easily calculated.

Then, if w = weight of moving parts (in lbs.)
v = velocity (in ft. per sec.)
g = 32·2 ft. per sec.
P = greatest total pressure on hot iron (in lbs.)
p = mean total pressure (in lbs.)
d = depth of impression (in fraction of a foot)

$\frac{wv^2}{2g}$ = energy of falling weight.

And if the depth of the impression be measured; then,

pd = energy delivered.

$\frac{wv^2}{2g} = pd \qquad \therefore p = \frac{wv^2}{2gd}$ [Space average.]

In a perfectly elastic material P = $2p$, as shown by the diagram of work, Fig. 101*a*. (*See Appendix II.*)

The pressure may also be found by a consideration of the *time* during which the energy is given up.

Then (if t = number of seconds of time); the momentum

$\frac{wv}{g} = pt$ and $p = \frac{wv}{gt}$ [Time average.]

In practice v, t, and d are difficult to arrive at, both on account of the varying rigidity of the material receiving the blow, and on account of the difficulty of measuring the *elastic* impression, or, again, of fixing the ratio of p to P, which is only shown in Fig. 101*a* for elastic deformation; p would have a much larger value in proportion to P in actual practice. Messrs. Massey state, however, that with 40 lbs. steam pressure:

A ½ cwt. hammer gives a blow of about 2½ tons.
A 5 „ „ „ 30 „

Referring again to Fig. 101*b*, D is the anvil and E the anvil pallett. F is the valve for admitting steam, opened by a horizontal movement of the handle L, and G is the regulating valve, which, requiring to work easily, is balanced by being made of piston

Digitized by Google

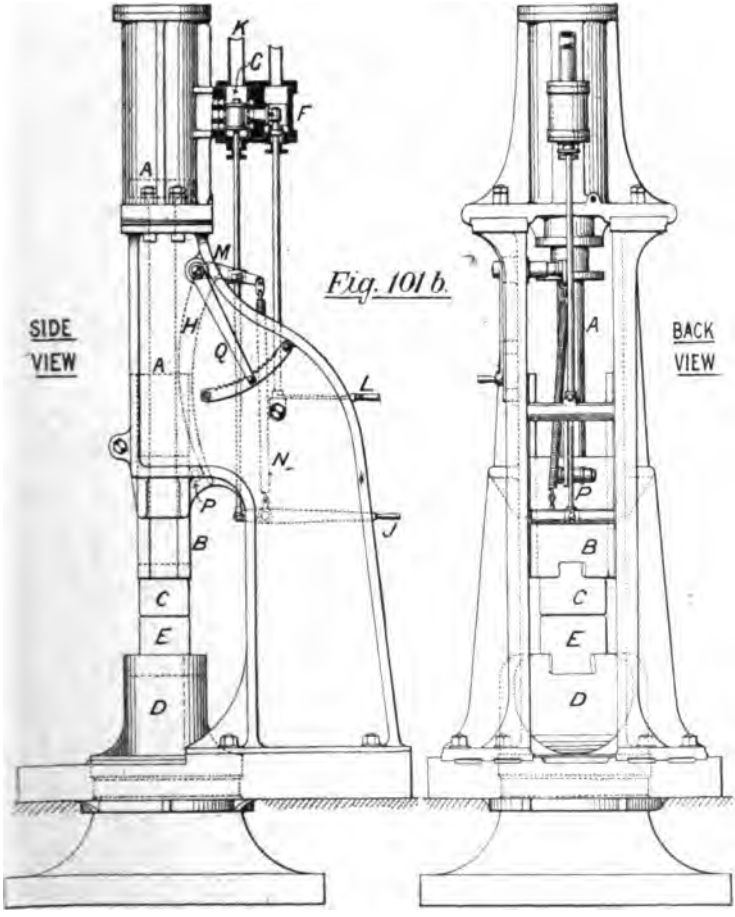

Fig. 101 b.

SCALE OF FEET

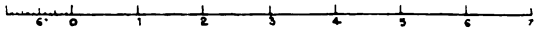

10 CWT. STEAM HAMMER

(by Messrs. B. & S. Massey)

face p. 98

Digitized by Google

Digitized by Google

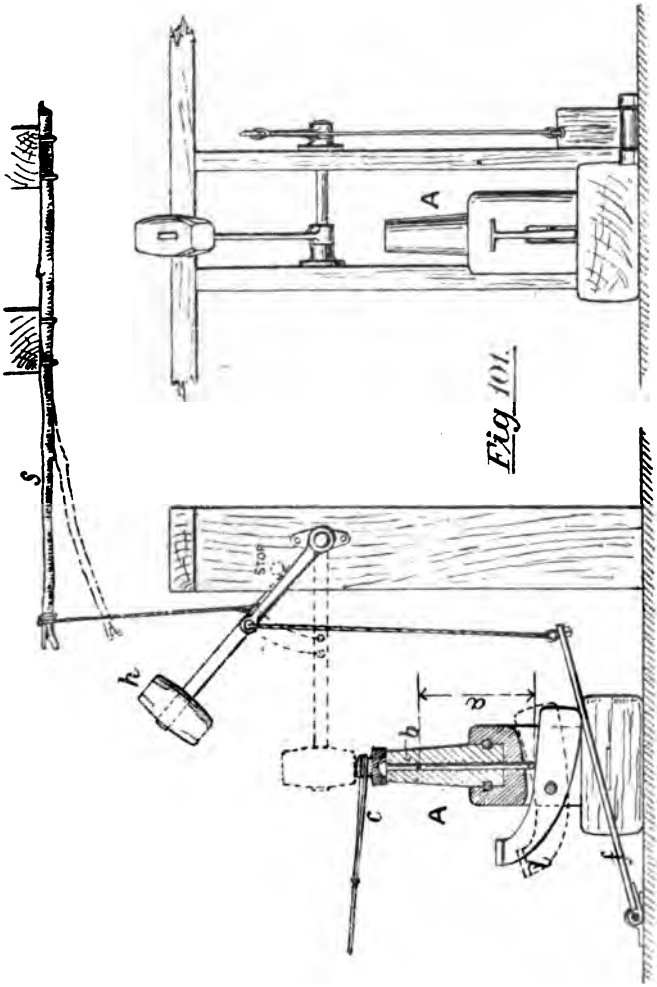

Fig 101.

Single-handed working.

form. In the drawing, steam is shown entering by the mid port, and passing down the lower cylinder port to raise the piston; at the same time the exhaust steam from the top of the piston is passing down the upper port and out at K. Now (supposing the self-acting lever H is out of gear), the piston having reached its

Digitized by Google

highest position, the valve G is moved upward by means of the handle J, and, while the exhaust steam from the bottom of the piston may escape at K by passing *through* the valve G (which is hollow), the steam enters by the upper port and brings down the moving mass.

The self-acting gear allows us to set the hammer for continuous blows having any desired period, which will go on so long as the starting valve F is open. The L-shaped lever H has its fulcrum at M, and the spring N keeps the valve spindle pulled down so as to admit steam at the bottom of the piston. While the piston is rising the tappet P on the tup pushes H to the right, and so puts valve G in position to bring the piston down again; and so on.

If the sector arm Q be moved to the left, the fulcrum M is thereby lowered, and H is, therefore, turned on its fulcrum sufficiently to the right to be out of the way of the tappet P. The hammer may then be worked by hand. If quick blows are required, Q must be pushed to the extreme right, while slower periods are obtained by bringing Q nearer and nearer to the extreme left.

If a line of shafting run along the shop, a hammer like the one in Fig. 102 may be applied with advantage for stamping work, though it is too slow in its beats for regular forging. Here the iron strap S is made to grip the drum B by the pull of the man at C, and so the hammer H is lifted by the power transmitted from the shaft A. Directly the handle is released (namely, when the weight reaches the dotted position), the strap slips, and the blow is struck.

Heating.—Good wrought iron will sustain almost any degree of heat without injury, but the more carbonised steels have to be treated with great care, for if heated beyond cherry-red they begin to break up from red-shortness, and cast steel will overheat very easily. The student may refer to Fig. 87 in Chapter III., which explains diagrammatically the different amounts of carbon in wrought iron, steel, and cast iron.

In forging wrought iron or steel, the heat should be kept up, and a new heat taken when the work is getting too cold, for it is generally admitted that working any metal by cold hammering crystallises the surface receiving the blow, and, if annealing be not

Digitized by Google

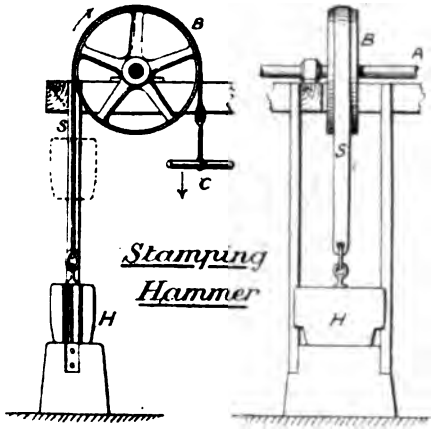

Fig. 102.

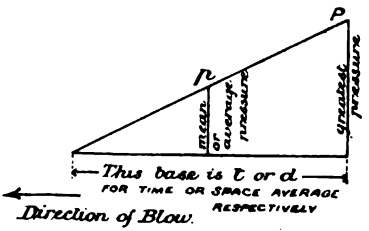

Fig. 101a.

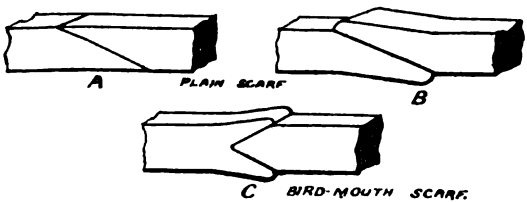

Fig. 103. Scarfing.

Digitized by Google

resorted to, the crystallised portion will be left weak and little better than cast iron. This should be carefully noted in making connecting rods of steam engines, or indeed any article the breaking of which might cause danger to life.

Welding.—Wrought iron cannot be cast,* but it can be welded without difficulty; that is, it may be joined piece to piece by heating and hammering, and work of great intricacy may thus be formed. The welding temperature for wrought iron is from 1500° to 1600° Fahrenheit, and the two pieces to be welded are heated to this temperature, which is detected by the iron beginning to throw out sparks. Two points have to be noticed. The iron should be, if possible, drawn out so that a *scarf* may be made, when welded; this is shown at A, Fig. 103, and, as will be seen, a greater surface for welding is thereby presented. But, if it be drawn out too fine, it will burn away when put into the fire for the welding heat, and to prevent this it should be left rather thick at the ends, as at B; the lump may be easily levelled afterwards. The two pieces to be welded should both be at their proper heat at the same time, which the smith ensures by changing their positions in the fire, so as to advance the one or retard the other. Withdrawing, he sprinkles them with sand, which forms a siliceous film or flux, and prevents scale by oxidation. Putting them now together, the smith gives one or two blows to fix them, and he and the striker then finish by rapid alternating blows. If the flux be carefully expelled and the joint well hammered while hot, the bar will be nearly as strong there as at any other section. Borax is used as a flux in steel welding. (*See Appendices I. and III.*)

The scarf weld is the one most commonly practised, but the fork weld at C, Fig. 103, is often introduced for large work on account of its greater security.

Having thus briefly mentioned the operations of heating and welding, we shall now proceed to describe the forging of a few objects.

The making of a **Bolt** with hexagonal head is shown in Fig. 104. A round bar A is taken, of suitable length; it is heated at one end, and *jumped* or *upset*, namely, is lifted by

* See note at end of Chapter III.

Digitized by Google

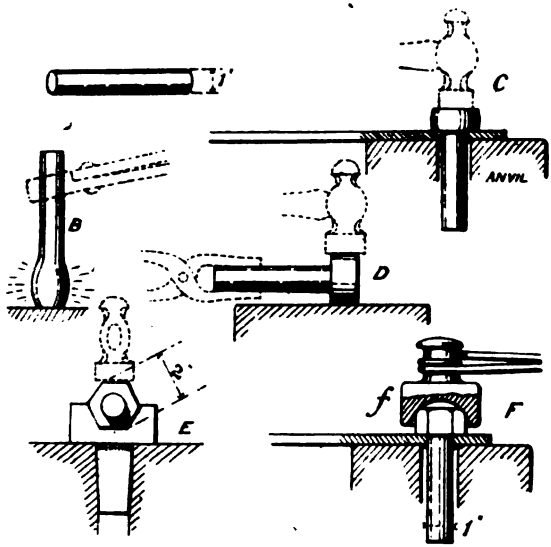

Fig. 104. Forging a Bolt.

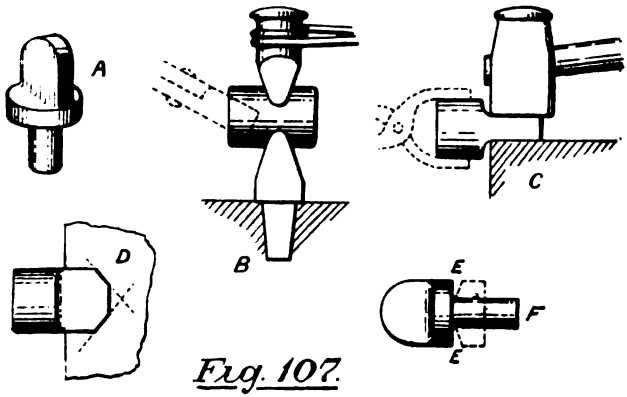

Fig. 107.

Forging a Single-eye.

Digitized by Google

the tongs and struck on the anvil as at B. A heading tool is next held over a hole in the anvil, and the piece B is reversed and dropped through the tool. Being prevented, however, from passing quite through, on account of the shoulder just formed, it is now beaten by the hammer until the head C is formed. The bolt is then taken out, and the portion C is roughly hammered into the form of a collar at D. It will now have become cold, and must be re-heated to finish the head, which is done in the hexagonal swage E, side after side being presented to the tool by turning the bolt round, and hammering each time. Finally, it is dropped into the heading tool once more, as at F, and, after receiving one or two finishing blows, a cupping tool *f* is applied to give the spherical chamfer.

We may now make a **Nut** for the above bolt. Of course, it is almost unnecessary to state that bolts, nuts, and rivets are now made entirely by automatic machinery, and these examples, therefore, are only intended as an introduction to more difficult forging. A nut can be forged in the form of a ring, and thus dispense with after-drilling. This is the case we shall consider. Fig. 105 illustrates the different operations. Slightly scarf the bar A, which is to be bent round to form the nut, and must, therefore, have the same width as the latter; for example, a three-quarter inch nut would require a bar about three-quarters of an inch by three-eighths of an inch in section. Next heat the end of the bar and bend round the anvil as at B, nicking it through with a blunt chisel (as shown at *a* in sketch C). Now, put it back in the fire to get a welding heat; take it out; and, breaking off sharply at *a*, lift up the ferrule remaining, on a mandril D, and weld the two scarfings together; then finish the hexagon in the swage E. The nut is not yet complete, however. Re-heating, it is cupped at top and bottom as at F, and the hole is finally made to exact size by the finishing mandril G, which is driven through the nut into the hole *h* in the bottom cupping tool. The nut may now be removed and cooled.

Fig. 106 shows the making of a **Holdfast** for pipes, or pipe hook. Two heats are necessary. In the first a bar is taken, as at A, and is drawn to a 'square' point on the further edge of the anvil as at B, a turn of 90° backward and forward between each

Digitized by Google

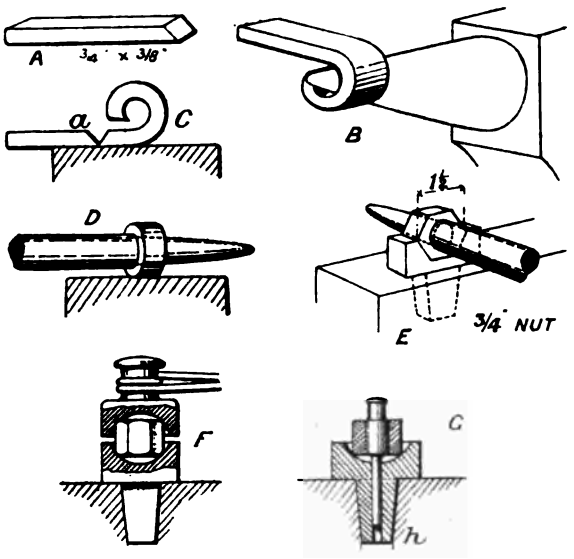

Fig. 105. Forging a Nut.

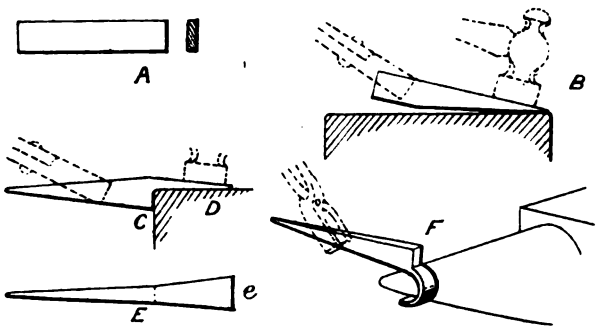

Fig. 106 Forging a Pipe Hook or Holdfast.

Digitized by Google

blow being given by the hand holding the tongs. A second heat is now taken, and the length of point having been marked off (c) the remainder is set down at D, on the edge of the anvil. Here again the bar is turned backward and forward to finish the edges in plan E, and the end is chipped off at *e* to proper length. Before the work is too cool the part *e* must be bent round the beak of the anvil, as shown at F, when the holdfast is complete.

A **Single-Eye** in the form of an eye bolt is shown finished at A, Fig. 107 (page 103). The hole is to be drilled out afterward. A short piece of round bar is first taken of the same diameter as the collar, and after heating is fullered at B, and set down as at C. On the second heat the edges are hammered, and the corners chipped off with chisel as at D, shown in plan. One end of the eyebolt is thus finished. Taking a third heat the line E E is marked off, and the tail of the bolt swaged down at F. Finally, the shank is cut off to the required length.

We will now describe the forging of a **Double-Eye.** A in Fig. 108 gives the finished form, serving as the end of a tie or connecting rod, to which it is welded when required. A square bar is taken (exact length of no importance) rather thicker than the part marked *a*, and is first heated, jumped, or upset as at B, and then flattened out in swage block till it assumes the form shown at C. Being heated a second time it is drawn out as at D, partly on anvil, and partly by returning it to the hole in the swage block, when it is finished off at the ends by chipping off the corners shown at E. A third heat is required to bend the T thus formed round the anvil beak to the fork shape F, and the fourth and last heat will serve: first, to hammer out the octagonal portion; and, second, to swage out the round part H.

A **Pin** with cotter is our next forging. After heading at the first heat, like the bolt in Fig. 104, it is then of the form B, Fig. 109. On the second heat it is cut to the length required, and the cotter hole marked off. The latter is 'drifted' through by means of the tool C—first, with the work lying in a bottom swage; and, second, to finish—by driving the tool through, over a hole in the anvil, *see* D. In punching and drifting the tool must be kept cool by taking it out of the work, and dipping in the water tank from time to time. A represents the finished pin. The

Digitized by Google

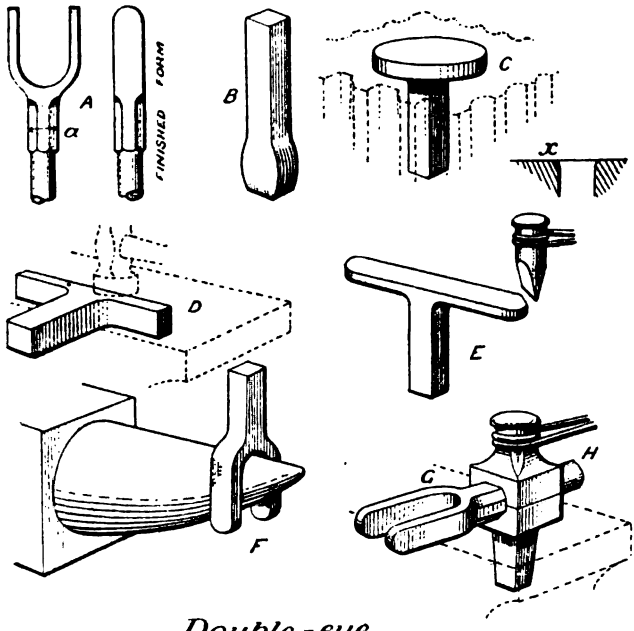

Double-eye.
Fig. 108.

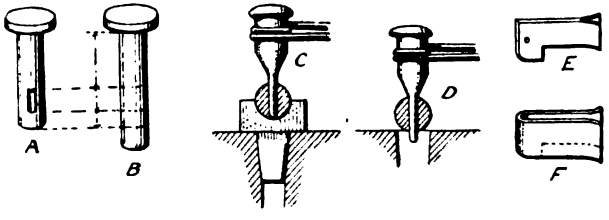

Fig. 109. Pin & Cotter

Digitized by Google

cotter E needs little description. It may be formed by bending a thin strip of iron as at F, welding the portion near the bend, and chipping out the narrow shank.

The student will have already noticed that a good deal of judgment has to be exercised by the smith in deciding upon the length and breadth of iron necessary to execute a certain piece of work, and, although this can rarely be achieved with very great nicety, yet practice enables him to guess it with sufficient accuracy. As a rule the cubic contents, or the weight of the stuff should be about the same in the rough as in the finished piece, some allowance being made for burning away in the fire, but it is best to err by having rather too much than too little, and in most articles the extra stuff can very easily be cut off. Some, however, require more exact measurement, as from the nature of their construction the after cutting cannot well be resorted to. Wherever parts have to be afterwards machined extra material should be allowed, say from one-sixteenth to one-eighth of an inch, but the careful smith will always leave as little as possible, and if he is directed to finish '*black*' he should make the work as exact to dimension as his tools will allow.

Except in the case of the nut at Fig. 105, none of the work already described has called for the operation of welding. We shall now, however, pass on to some examples requiring the aid of this important process.

A common **S or Double-Ended Spanner** is the article we shall first consider. A, Fig. 111, shows the finished forging. A bar is taken of the same length as the arm, leaving a little extra material for welding. It is heated and first bent to the **S** form (B) on the anvil beak, straightening by flat hammering on the face of the anvil; and is next drawn out at the ends as at C. Now, two pieces of rather thicker bar being procured to form the jaws, these are heated and bent round the beak, and the corners chipped off and rounded as at D. Heating again, these jaws are finished on the bottom tool and scarfed down as shown at F. We are now ready to complete the spanner by welding the jaws to the arm, at the scarfings already made (see G), and finish may be given between the flat face H, and the anvil.

In Fig. 112, A represents a **Shackle** for use with chain or

Digitized by Google

rope. Some little care should be exercised in gauging the length. For an 'inch' shackle, made out of round bar one inch in diameter, a length of fourteen inches would be required. This

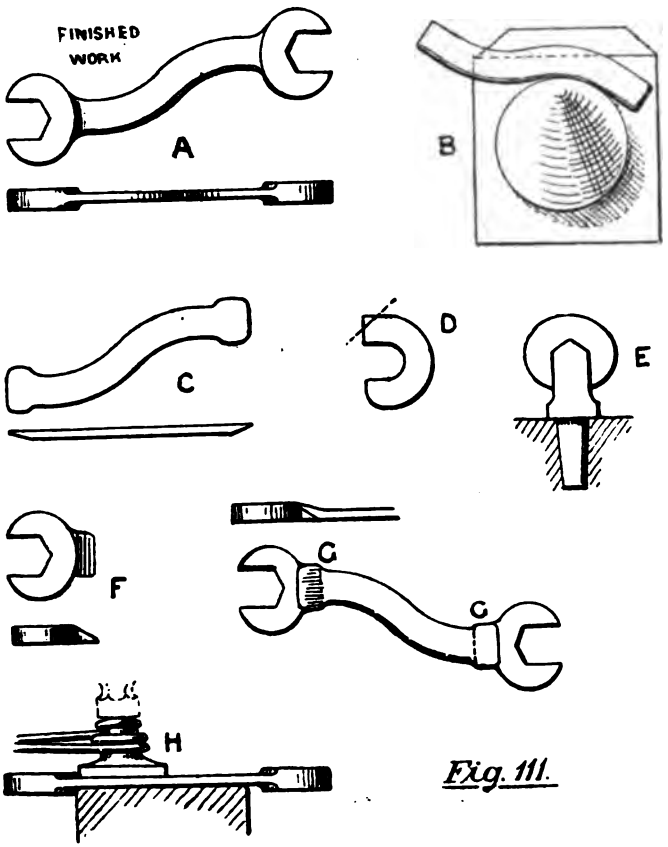

Fig. 111.

S Spanner

bar is set down to the form at B, by using the set hammer and bottom swage *b*. Two heats, one for each end, are required for this purpose. Another heat for each end enables us to make a

Digitized by Google

scarf of the form shown at C, by drawing down at the point and sides. The eyes are next formed by taking a welding heat, bending round a mandril rather smaller than the finished size of hole, and welding with hammer as at D. A flat face, E, is used to smoothen, and a finishing mandril is driven through the hole

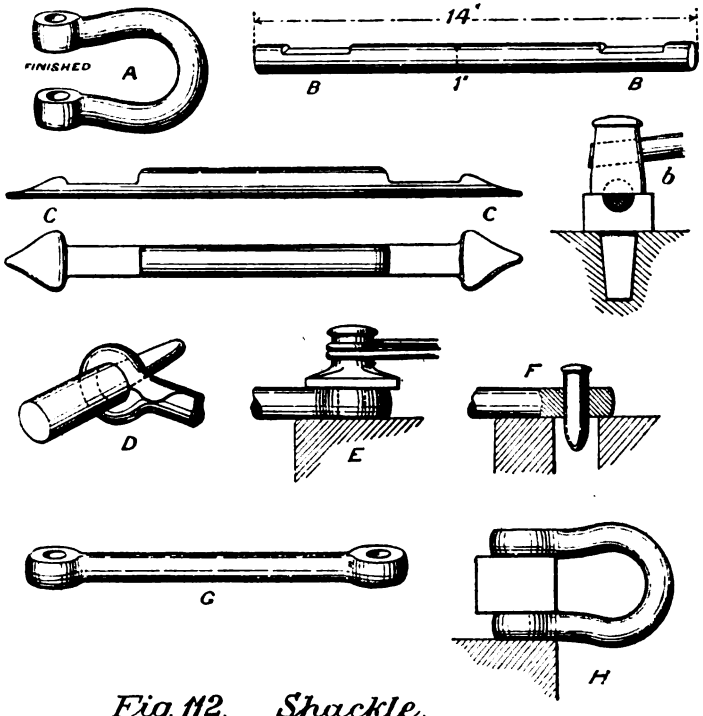

Fig. 112. Shackle.

as at F. These operations being performed on each eye, we have the shackle advanced to the stage G. Only one more heat is now necessary to bend the rod to the proper form round the anvil beak and the finishing stroke is given on a block (H) which serves as a template to define the distance between the eyes.

Digitized by Google

An **Eyebolt** of large dimensions is treated in Fig. 113. A is the finished condition. It is such an eye as would be required for the attachment of a rope or chain, being made of round section to prevent cutting or chafing. Here we may begin by taking a round bar of the same section as the part A, and, wrapping it round, scarf and weld it to the form of the eye as at B, at the same time scarfing down the joint again. This done, a second bar C of thicker section is cut to form the shank, and, after scarfing, is welded to B, giving the appearance D. Lastly, the collar is put on by taking a piece of square bar of small section, which may be wrapped round the shank at welding heat and scarfed at E. The bolt is then finished off by fullering the part *b*, and swaging *e*, a rough file being used with advantage afterwards.

Another and probably quicker way of making the eyebolt is to take a bar of the same diameter as the collar, and work out of the solid by swaging down the shank, fullering and flatting out the eye portion, the hole being punched and rounded off.

As an interesting example of punching and swelling out we may take Fig. 113*a*. Here we have a portion of a **Harrow-frame**, and it is desired to form the socket for a common square tyne. The bar at A is first upset, punched, and drifted to the form at B. It should be noticed that at first only a narrow, long section of drift is used, to avoid breaking the bar. The narrow hole is swelled into a round one by a suitable tool on the next heat (shown at C), and the final step is the further swelling by square drift, as at D, carefully finishing with a flat-face.

Hooks may have the eye formed in the manner described for the shackle of Fig. 112, or the large end may be 'jumped, and worked from the solid by means of a flat-face tool, either in the case of hook or shackle, and the hole left to be punched or drilled cold. The solid method needs no special description. Assuming a case similar to the one previously described for the shackle, the bar being first round and of the diameter of the thickest part required, the eye end of the bar is drawn to the proper diameter for that place, while the opposite end is drawn down nearly to a point. This is shown by sketch A, Fig. 114. The eye is next turned and welded, and the hole finished with

Digitized by Google

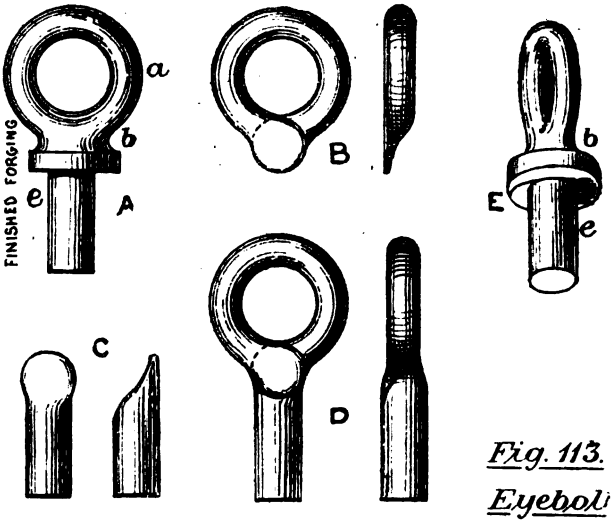

Fig. 113.
Eyebolt

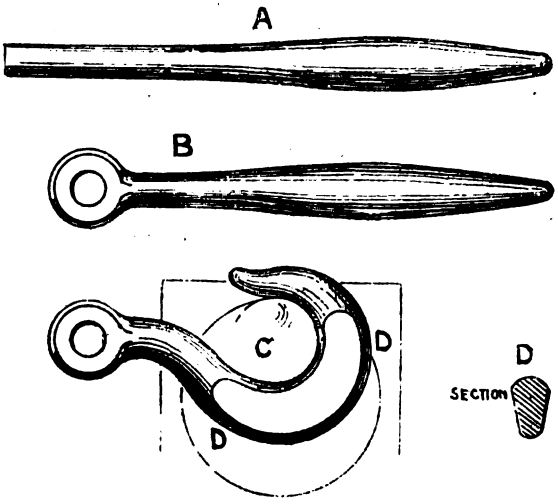

Fig 114 Hook

Digitized by Google

mandril either now or afterwards (B). Heating the rest of the bar the hook is bent to the correct form round the anvil beak C, being constantly checked by rule and sheet iron template; and the proper section given at the same time (shown at D D) by means of set hammer or flat-face. Both these last-named operations must go together, for the form of the hook will be more or less spoilt by flattening to the section at D D, and this must be again restored by bending.

Bolts in machinery are sometimes placed in very extraordinary positions, so that the spanner in Fig. 111 may have to be discarded, and the **Box-key** (represented in Fig. 115) used in its place. It has a socket at A to fit the nut, and a shank at B, on which a wrench (sketched at C) is placed when required. The key is forged by making the A and B portions separately, and afterwards welding them together. Thus, part A is made by bending a strip of iron, which has been previously scarfed at the ends, into the form of the hollow cylinder D. This is done on the anvil beak, and a second heat is necessary to weld it. The piece B is next formed from a round bar of sufficient section to give the square when flattened. It is shouldered on a swage as at E, sufficiently small to fit into the ring D. And now the small end of B and the cylinder D are both heated to welding temperature; then, being put together as at F, are riveted by striking the mandril G, and by hammering round as at H. The fourth heat is required to work out the square J with flat-face and anvil, and on the fifth and last heat a mandril, which may be hexagonal or square, as desired, is driven into the cylindrical portion K, and the outside hammered until the requisite shape is given to the hole. Removing the mandril the key is considered as finished.

Tongs, having to be used almost continually, are soon burnt away by the fire, and the smith must be able to forge them as needed. We will therefore describe the forging of the round-nosed tongs sketched at B, Fig. 98. The 'bits' that grip the work are made first. For them a piece of square bar is to be set down on the edge of the anvil until it receives the form A, Fig. 116; the successive operations for this are shown at 1, 2, 3. The two bits should not be made right and left-handed, but exactly alike, for in turning one round axially it will be found to accommodate

Digitized by Google

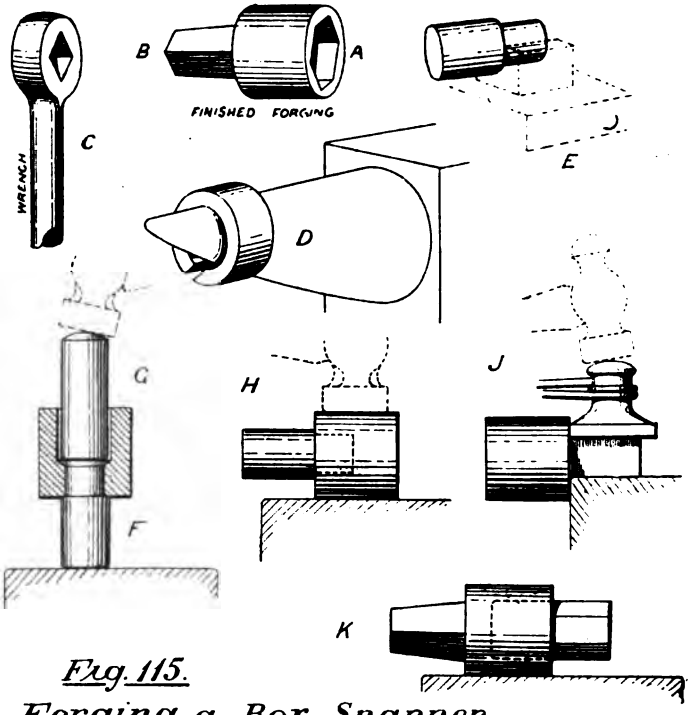

Fig. 115.
Forging a Box Spanner

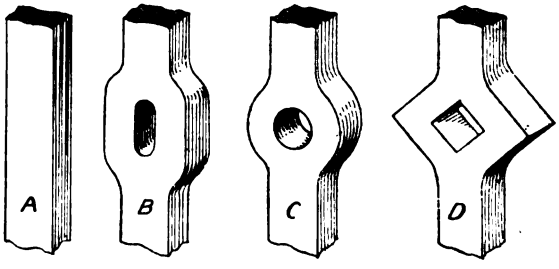

Fig. 113a *Swelling a Harrow Frame*

Digitized by Google

itself quite correctly to the other. One heat should be given for each of these settings down, and during the third the hole (B) is punched. Next, the handles are to be welded to the bits, and for this purpose round rods of sufficient length are scarfed, heated to welding, and united in the usual manner C, being finished carefully in round swages, D. The nose bits are yet flat; they are therefore rounded by means of a top fuller and bottom swage, as at E, and, finally, the two half-tongs are riveted together tightly as at F with a hot rivet, the handles being worked backward and forward while the rivet is cooling, and also during the after quenching in water. This method ensures a well-riveted but workable joint.

The student will notice that in the processes of forging two principal methods are followed, which in many articles merge considerably the one into the other. These are the forging of the object (1) entirely from the solid, by drawing down or cutting out; and (2) the joining of the parts of the forging by welding. The former is a process of cutting out or carving, the latter of building up. Figs. 104, 106, 107, and 108 are examples of the first method, which is the one practised unless the method of welding should be cheaper, and, as we shall see, is always used if possible in large objects that have to sustain important loads. Figs. 111, 113, 115, and 116 are cases where the second method is more useful, for in Fig. 116 a round bar is attached to work that is easiest forged from a square bar, and the end pieces in Fig. 112 are manifestly easier made separately and welded, than they would be by forging completely from the solid.

Further examples of welding are shown in Fig. 116*a*. In each case A is the work prepared by scarfing or otherwise, and B the built up article. The **Eye** may be said to be merely an example of ornamental welding, for it would be difficult to find a use for it in practice. The **Stud** is more commonly met with; it is prepared as shown, by scoring the surfaces to be welded with a chisel; less pressure will then be required, the form of the stud will not be so much distorted at the shoulder, and the two pieces are much more likely to enter into each other.

The next three forgings to be described will be worked in the 'solid' manner, and they will conclude our description of the

Digitized by Google

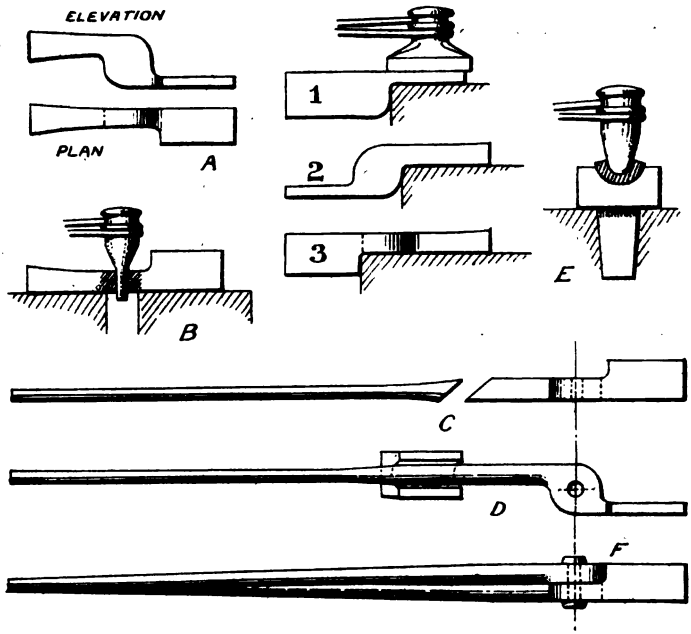

Fig. 116. Forging a pair of Tongs.

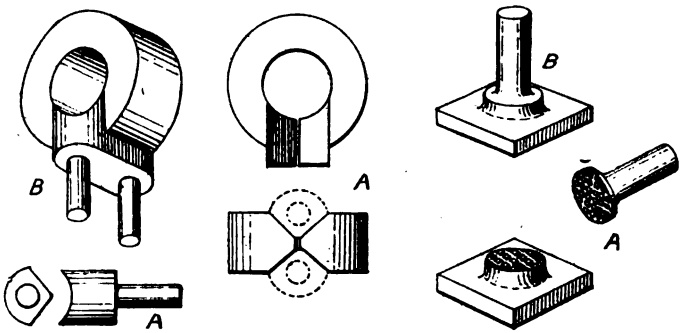

Fig. 116a. Special Welds.

Digitized by Google

methods used by the smith. They will also introduce the use of the steam hammer, as applied in the smith's shop.

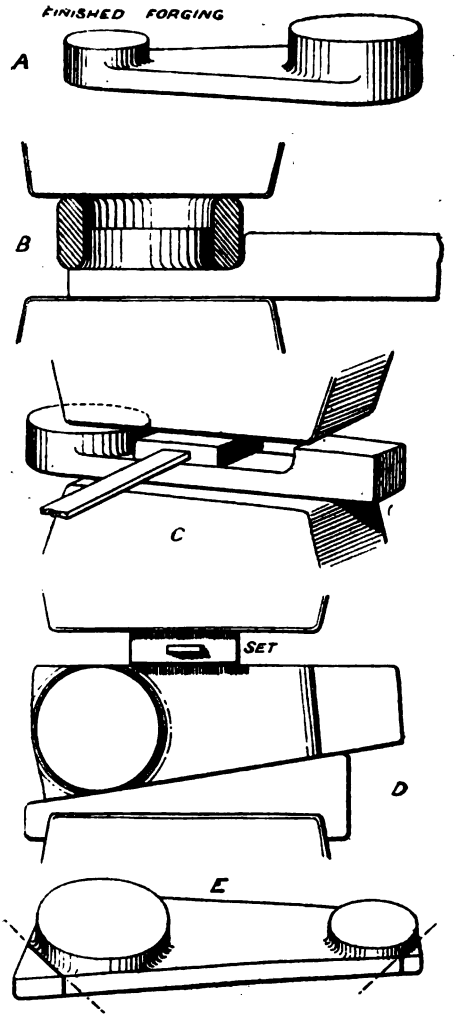

Forging a Single-webbed Crank. Fig. 117.

Fig. 117 is a **Single-webbed Engine Crank** shown finished at A. A slab of iron is required of the same thickness.

Digitized by Google

and width as the largest boss. Heating to a good white heat, it is put under the hammer, where the ferrule B stamps out the shape of the boss. It is next drawn out by suitable tools, called sets, at top and sides (see C and D) until it is of correct length to form the smaller boss, which is first set down to the proper thickness, and then stamped by means of a ferrule, as before. The forging is now of the form E, and all that is necessary is to finish by cutting off the ragged corners round the bosses, which will require another heat—the third; the first having been used for the large boss and the setting down, and the second for the small boss.

A **Bell Crank Lever,** whether large or small, can be made in a similar manner to the foregoing. A, Fig. 118, is the finished lever. A bar is taken, as before, of the thickness and width of the boss. It is first bent to a right angle—if a small lever this may be done on the anvil beak, but, if large, blocks would be put under the steam hammer, with the hot bar between, as at B. That done, the boss is next formed by ferrule, as at C. Another heat will now be found necessary for each arm, in order to set down, as at D D, to proper section, and the ends are finally cut to curve by means of a chisel or cutter (see Fig. 119*a*).

Figs. 119 and 119*a* represent the forging of a **Small Crank Shaft,** say two inches in diameter, such as can be worked by the smith with the aid of a small steam hammer. A is the finished shaft, and has two crank arms forged upon it at right angles to each other, in the manner of locomotive axles for 'inside' cylinders. We must, to begin with, have a slab of iron of square section, sufficiently large to form the crank web when drawn down. This is seen at B. It should also be long enough to complete the whole shaft when drawn down and swaged in the manner to be described. The bar B is first to be formed into the shape shown at C, by heating to a good white heat and setting down under the hammer, as at D. This will leave the slab of the same section as the crank web, and, if carefully set down to the form indicated, the webs will now be in correct position, namely, at right angles to each other. Of course some care must be taken, the right angle being tested with a square, and the part *a b* in particular should be made of such a length that when swaged to the round section it will measure the correct distance

Digitized by Google

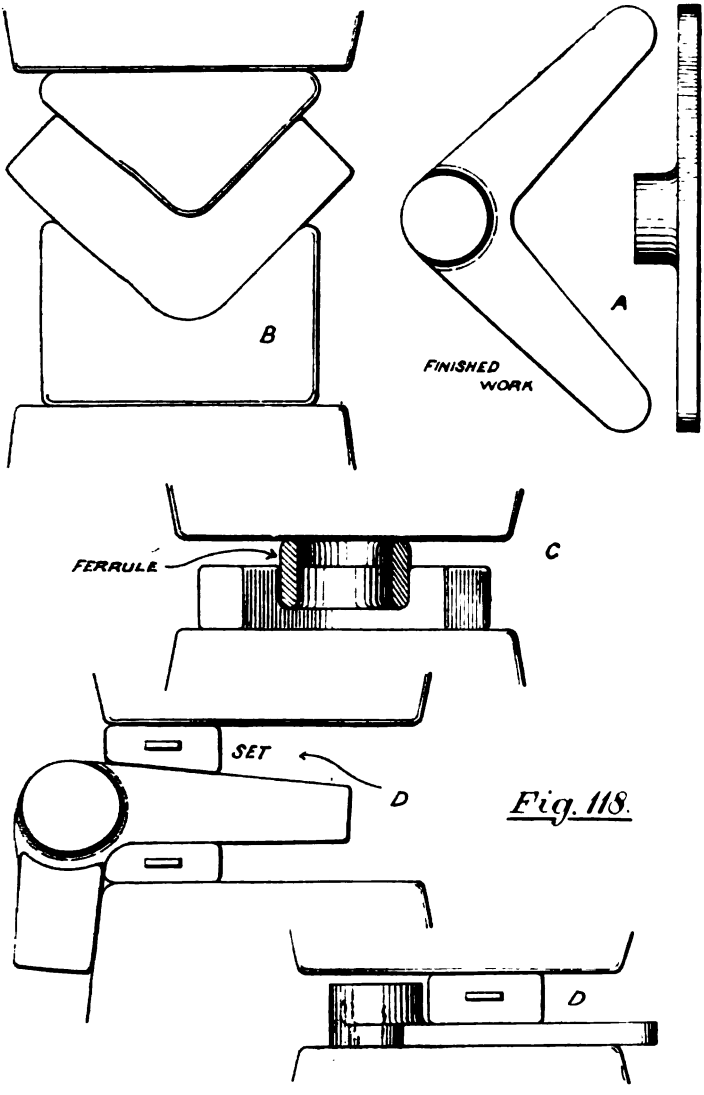

Fig. 118.

Bell-crank Lever

Digitized by Google

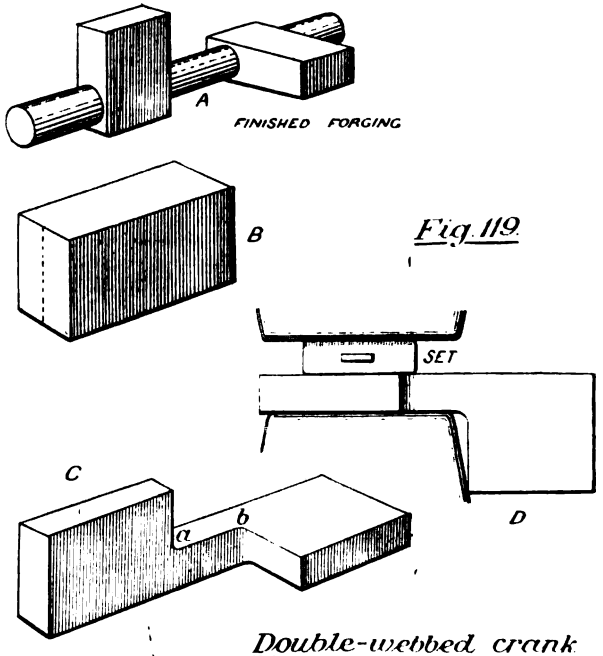

Fig. 119.

Double-webbed crank

Digitized by Google

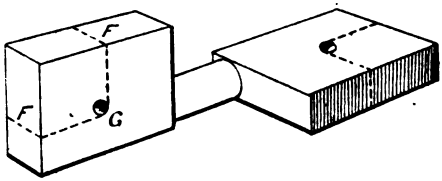

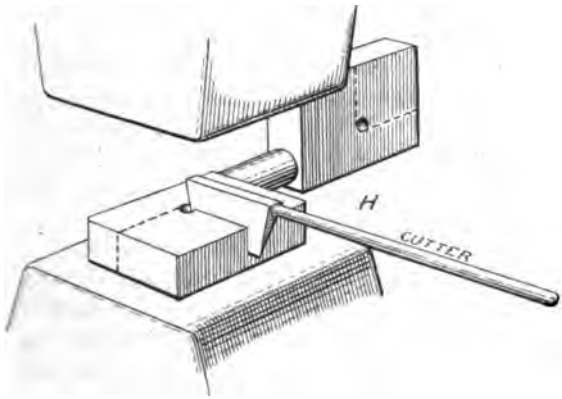

Fig. 119a.

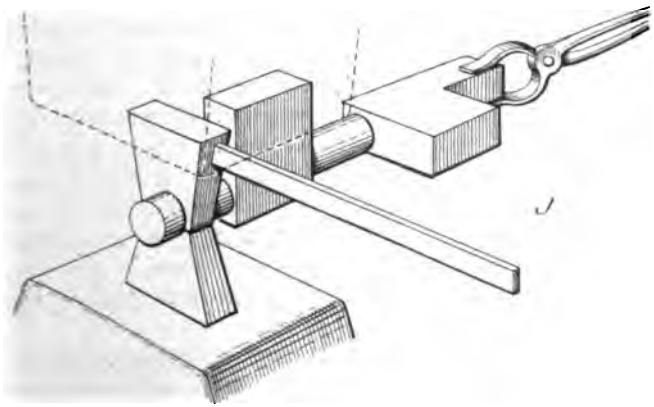

Digitized by Google

between the crank arms. Probably this piece had better be swaged next (it may require another heat), the forging being turned round, backward and forward, to produce a good result (see E). The distance between the cranks should be now finished very exactly, by knifing or other means. The ends remain. Here it is necessary to first cut out the superfluous material by marking off at F, punching the hole G, and, while the crank is still hot, cutting out the rectangle with a knife or cutter (see H). Afterwards the shaft is rounded by swaging (J). When this has been done for both ends, and the shaft carefully measured, as well as tested for axial straightness, straightening if necessary, the work may be considered complete. In this form of crank (double-webbed) the pair of webs are always forged solid in the manner described, and the piece between taken out either by slotting or turning in the lathe.

At this point we may as well consider one other form of crank, which has many advantages. In Fig. 120, A is the shaft alluded to, and is there shown finished by turning in the lathe. It is considerably stronger than the one previously described, on account of the fact that the fibres follow the bend of the crank webs (represented in dotted lines), while in the shaft of Fig. 119 these fibres are cut through when the mid pieces are slotted out, which must of course weaken the webs considerably. The only objection to the form here shown is that a great width is required for the crank itself, and, as this cannot always be spared, the crank has only been applied on portable or traction engines up to the present. Properly we might have described this in the space devoted to the forge, for a larger hammer is required than commonly occurs in the smithy. A bar of the best Yorkshire iron, of sufficient diameter to turn down to finished size, is heated and placed between the blocks B B, and these are made to approach each other by blows from the hammer, at first gently, and afterwards more strongly. Lastly, the shaft must be tested for straightness.

Stamping.—Where several articles are required exactly alike in form and dimension they can often be forged more cheaply by the use of stamping tools. The crank last described might almost be termed an example of this kind of work, and the lever

Digitized by Google

Use of Bending Blocks. Crank Shaft.

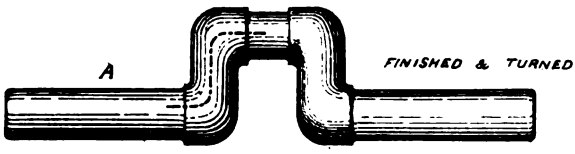

Fig. 120.

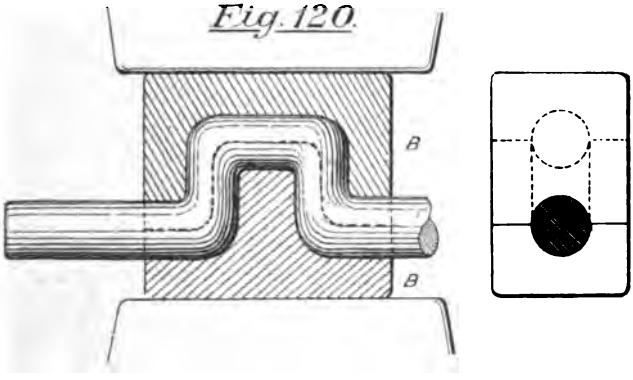

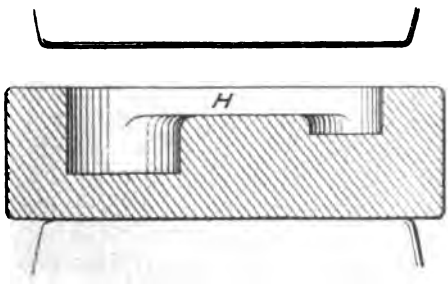

Fig. 121. Stamping Die

Digitized by Google

in Fig. 117 could be stamped by means of the tool shown in Fig. 121, the hot iron being placed in the hollow H, and the hammer brought down upon it. The ragged portions are afterwards chipped off the forging. Usually these stamping tools are made of massive cast iron, but if they are to be used extensively cast steel will be found necessary. Other examples of work suitable for stamping are shown in Fig. 121*a*, where A is a spanner, B a double eye, C the centre portion of a screwing stock, D the handle portion of a lever, and E the boss part of the same lever. (*See Appendix II.*)

Before leaving the smithy two processes should be explained, because they are as a rule performed by the smith. These are the methods of hardening wrought iron and steel. Cast iron, as we have seen in Chapter I., can be easily hardened at the surface by chilling, this taking place while the casting is in course of formation. Wrought iron and steel are hardened after the article is completed.

Case-hardening.—This is the name given to the process by which wrought iron objects are hardened to a depth of from one-eighth to three-sixteenths of an inch below the surface. After forging the work is machined and polished, and is then made to absorb carbon by being placed in air-tight boxes or *cases* in contact with some substance rich in carbon, being strongly heated while in that condition. The method is much the same as that pursued in the cementation process (Fig. 88), and it will therefore be seen that the iron at the surface is converted into a film or case of steel, the only difference from the cementation process being that the heat is merely kept on long enough to case the iron with steel and not to steel it quite through. While the iron is left, then, hard at the surface the inside remains tough, and is as capable as ever of enduring vibration. The boxes may be either made of sheet iron, or may be fireclay retorts similar to those in use at gas works, and provided with a lid to keep them air-tight. They may be heated as in Fig. 88, and the substance put in contact with the iron is not wood charcoal, as in cementation, but animal charcoal in the form of bones; for it is found, why it is not quite clear, that if nitrogen be present the carbon will unite more rapidly with the iron. Other substances may be used, such

Digitized by Google

as prussiate of potash, leather or hoof scraps, but the process is chemically the same. After packing, which must be carefully done, to prevent the articles bending while hot, the heat is raised during two hours, the whole kept at a regular temperature for

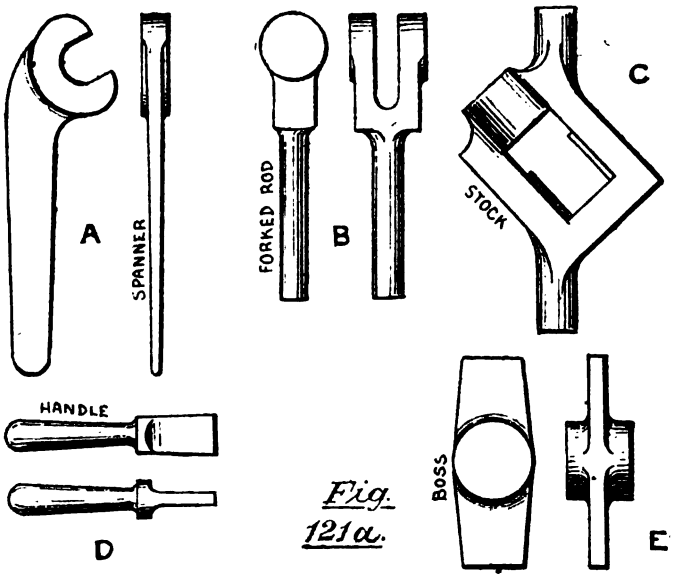

Fig. 121a.

Stamped Work.

about nineteen hours, and then allowed another two hours to cool. Removing the articles they are quenched in water, straightened, and re-polished. (*See Appendices I. and II.*)

Steel of a mild quality may be hardened at the surface by the absorption of more carbon.

Such small articles as have to withstand considerable wear are case-hardened, *e.g.*, radius links for reversing gear.

Tempering is a method of giving to a piece of steel any required degree of hardness. Properly there are two distinct processes meant when we speak of 'tempering' a steel tool. The first of these is that of *hardening*. Here the steel is heated as

Digitized by Google

equally as possible to a 'cherry red,' and not more; and on withdrawing from the fire it is plunged vertically into a vessel of cold water. The quickness of cooling has a great effect on the hardness, and this may be accelerated by moving the article about in the water. Cracking or warping will also be prevented by judicious motion.

The steel is now so hard that it will scratch glass. It must next be *tempered* or let down to the required degree of hardness. If the tool be again heated to cherry red, and allowed to cool slowly it will by that means have become annealed, and will be at its softest; but if it only be heated to one of the temperatures in the following table (Fig. 117*b*, Plate III.), and then cooled rapidly, it will take a particular degree of hardness corresponding to that temperature, and to be obtained at no other. When letting-down, the *softest* tool will be that which is cooled at the *highest* temperature, and the *hardest* that cooled at the *lowest* temperature.

The exact temperature which the tool has assumed is ascertained by the colour which appears on the brightened surface, due to a film of oxide of iron formed by contact with the air. There is some difference of opinion as to the requisite hardness for certain purposes, and slightly different colours are required for different steels, but Plate III. is suitable for average tool steel.

Tempering a Chisel or Drill.—To make the matter clearer we will take the case of a chisel for chipping metal. It is forged out of a steel bar of the section shown at A, Fig. 122, and is drawn out (at as low a heat as possible, to prevent burning) to a flat point as at B. This point is now to be hardened and tempered, while the rest of the chisel is to remain in its natural condition. Whenever the tempering is accomplished by quenching in *water*, the preliminary process of hardening must always be performed, otherwise the tempering would have no effect. In the case of the chisel, or any tool having a point requiring a particular temper, the two processes are performed at one heat, but it must be quite clear that hardening is not therefore dispensed with. Heating the *whole* chisel to a *cherry red*, the part *a b* only is quenched in water, and so becomes very hard. Now rub the point of the chisel with a stone to brighten it a little, and, as the

Digitized by Google

	COLOUR	TEMP. F.	USE.
VERY HARD	CHERRY RED	1650°	For Preliminary hardening only
SOFT	PALE BLUE	600°	Too soft for anything
ELASTIC	DARK BLUE	570°	Springs Screw drivers Circular saws for Metal Cold chisels for W. I. Firmer chisels
ELASTIC	DARK PURPLE	550°	Cold chisels for C.I. Axes and adzes Cold chisels for Steel
ELASTIC	LIGHT PURPLE	530°	Augers
ELASTIC	YELLOW PURPLE	520°	Flat Drills for Brass Twist Drills Plane Irons
ELASTIC	BROWN YELLOW	500°	Gouges Reamers Punches and Dies
HARD	VERY DARK STRAW	490°	Chasers Taps Screw-cutting Dies
HARD	MEDIUM STRAW	470°	Boring cutters
HARD	LIGHT STRAW	450°	Milling cutters Drills Iron-planing tools
HARD	VERY PALE STRAW	430°	Steel-planing tools Hammer faces Light turning tools Scrapers for Brass

Fig. 117 b.—Tempering Table.

Face p. 126.

Digitized by Google

Digitized by Google

heat from the body *b c* travels down towards *a*, the colours will appear, the point becoming gradually hotter, yellow first, then through brown to blue. But we require for our chisel the temperature of 550°, which is indicated by a dark purple; as soon, then, as this tint is seen, the chisel is entirely plunged into water, and the point is thus made of the correct degree of hardness. A drill point may be tempered in a similar manner, using, however, the darker straw yellow for colour.

Tempering a Screw-tap.—Sometimes, when an even temper is required over a considerable surface, the result may be better obtained by putting the article in contact with a body of hot metal. Such a case is that of a screw-tap. The tool, being finished and polished, is next to be so tempered as to make the

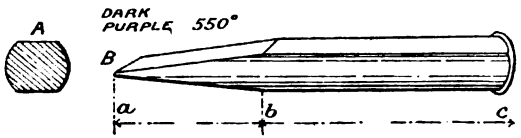

Fig. 122. Tempering a Chisel.

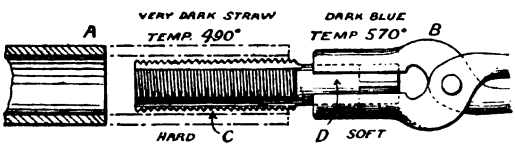

Fig. 123. Tempering a Screw-tap.

screw threads hard, while the square shank remains soft. An iron tube being procured, A, Fig. 123, of such a diameter as to just fit freely over the tap, the latter is first lifted by the shank, within red-hot tongs, B. In the meantime the tube has been heated to a dull red, and as soon as the first signs of straw colour are seen on the tap shank, due to the heat from the tongs, the tap is placed within the tube as shown. The shank will have had, so to speak, a start of the rest of the tap, and by the time C has assumed a dark straw colour, D will have arrived at dark blue, a

Digitized by Google

higher position in the colour scale. At this point the tool is quenched in water.

Two other methods of ascertaining the desired temperature are in use besides the colour test. These are the flashing temperatures of certain oils, and the fusing points of certain alloys. The first is practised by coating the part of the tool with oil, and holding it over the fire until it blazes off, then quenching in water. In the second, the alloys are usually of lead and tin, and vary from equal parts of each metal to complete disappearance of tin and consequently total lead. A bead of the alloy placed on the tool, may be watched until it melts, and the part then quenched. Of course, as before, the two operations of hardening and tempering are required. Watch springs are tempered by the blazing-off of oil at a temperature of 570°, producing a dark blue.

Hardening in Oil.—This may be looked on as a species of tempering without preliminary hardening. It is of great value when dealing with articles having very large surface, and which could not be heated to an even colour by the methods previously mentioned. Only one degree of hardness can, however, be obtained, that corresponding to a dark straw colour in the table. A pan of oil being provided of sufficient capacity, the article, heated to a dull red, is plunged into the oil; and the softer result when compared with water hardening is no doubt due to slower cooling. (*See Appendices I. and II.*)

Gun cores are cooled in oil, to enable them to withstand the wear due to the shell, and also to increase the strength of the steel. Thus, in some experiments at the Terre Noire works, four specimens of steel were heated and cooled in oil, and it was found that whereas the average breaking stress per square inch was 35·29 tons before the operation, it had afterwards increased to 51·23 tons.

It should finally be noticed that much care is required in tempering—care not to overheat in the first operation; care not to warp the tool in cooling; care not to crack the tool at the water level. Some tools will harden best in a saturated solution of salt, others in a stream of running water. Generally it is wise to move the tool well up and down during cooling. Hardened steel may be compared to *glass*, annealed steel to lead, and

Digitized by Google

tempered steel to *whalebone*. Our process then when tempering by the aid of water is to raise the steel to 'glass,' and then lower it gently to 'whalebone.' Hardening in oil gives the 'whalebone' without passing through the 'glass' stage.

THE FORGE.

We shall now pass on to describe the turning out of very heavy forgings, which include all articles too ponderous for smith's work, and which are consequently made in the forge under a very heavy **Steam-hammer**. Fig. 124 is a drawing of a hammer suitable for general forge work, such as we are about to consider, but, of course, extra large forgings would require special-sized hammers.

The hammer in Fig. 124, Plate IV., has a falling weight of five tons. After the careful account of the smith's hammer there will be very little to say here by way of description. As before, the outer valve is for the purpose of *admitting* steam (being opened by a screw acting at the end of a lever), while the inner valve controls the *direction* of flow, the exhaust passing upward. The long hand-lever serves to move the distribution valve, and the self-acting arm between it and the valve reverses the latter as soon as the arm is moved by the tup on its upward travel.

The **Furnace** used by the forgeman is very similar to that shown in Fig. 85. It is there called a Puddling Furnace, and indeed 'blooms' are to be made for heavy forgings just as in the case of puddling, the only difference being that they are built from scrap iron instead of white pig. A pile of scrap iron is heaped on a rough wooden tray, and is then put into the furnace. Several of these piles being so placed and heated sufficiently, they are then found stuck together. Withdrawing them, thus adhering, by means of very large tongs having a balance-weight on the handle end, and supported at the middle by a crane, the blooms are put under the hammer and well beaten together to form slabs. It will be these slabs that we shall use to build up our forgings. Fig. 125 shows an arrangement of furnace and cranes for heavy forgings.

First we shall consider, in detail, the forging of a **Double-throw crank shaft** of large size, the finished form of which is

Digitized by Google

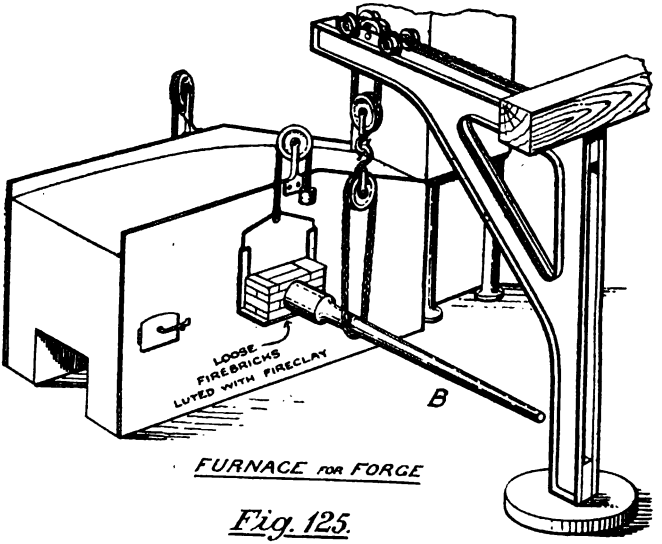

FURNACE FOR FORGE

Fig. 125.

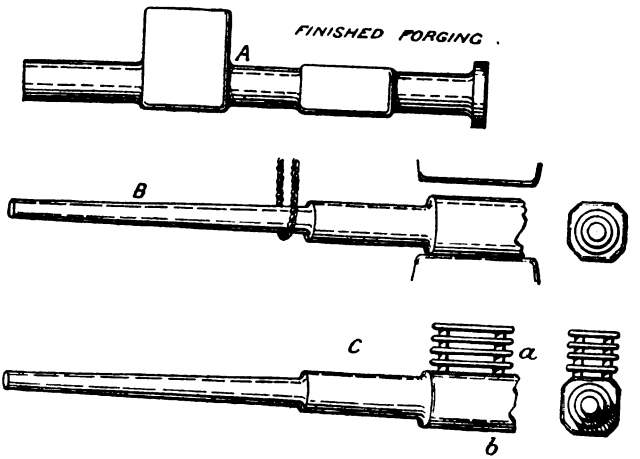

Fig. 126.

Large Crank Shaft.

Digitized by Google

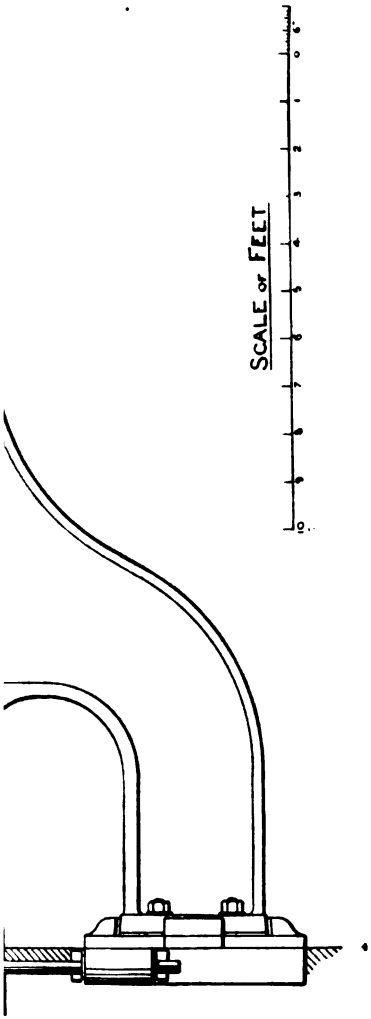

HAMMER. (by Messrs. B.

Digitized by Google

Digitized by Google

seen at A, Fig. 126. The forgeman always requires a staff or '*porter*' to carry his forging, to which, for the time at least, the latter is welded. It is simply a long tapering bar B (Figs. 125 and 126), supported by a crane chain, and carried to and from the furnace by the undermen, while the head forgeman directs the hammerman, and applies the different tools to the work under the hammer. The end of the porter is put in the furnace and made to pick up, at a white heat, a few slabs which have been previously placed there; putting them under the hammer they are all thoroughly welded, and the round form of the first part of the shaft obtained by swages similar to those of the smith, but of suitable size. More slabs are added, and welded, until the shaft is sufficiently long to take the first crank web. The web is now built up by laying slabs upon it as at C (Fig. 126), the end being put back in the furnace. Care must be taken in piling these slabs, both now and always, that space be left between them by the placing of pieces of scrap, so as to enable them to take a welding heat right through. Bringing the hot slabs back to the hammer, they are welded by striking both at top and sides: and so the process is repeated on both sides, *a* and *b* (Fig. 126), until the shaft has the form D (Fig. 126*a*). It is then set down as at E. But the web is not yet finished. Heating again, it is flattened out to the shape F, and slabs are again piled on and welded to the body of the material, the process being repeated as before for both sides of the web. The object of laying the slabs on both sides of the web is to keep the direction of the fibre such that the crank may be best suited to meet the stress put upon it. By this time the forging, being unbalanced, will be difficult to turn round; but this is overcome by clamping four arms *d d* on to the porter, these being turned by the strength of two or four men as required. The web is now hammered at top, bottom, and sides, to correct dimensions, the ragged end *e* chipped off by means of a cutter, and the other end *f* cut down with the same tool, the extra piece G (Fig. 126*a*) being worked by sets until drawn out to receive more slabs. The shoulder *g*, and the piece G, are next finished to the round by means of swages, and the building of the second web commences. This is carried out in exactly the same manner as the first one, except that it must

Digitized by Google

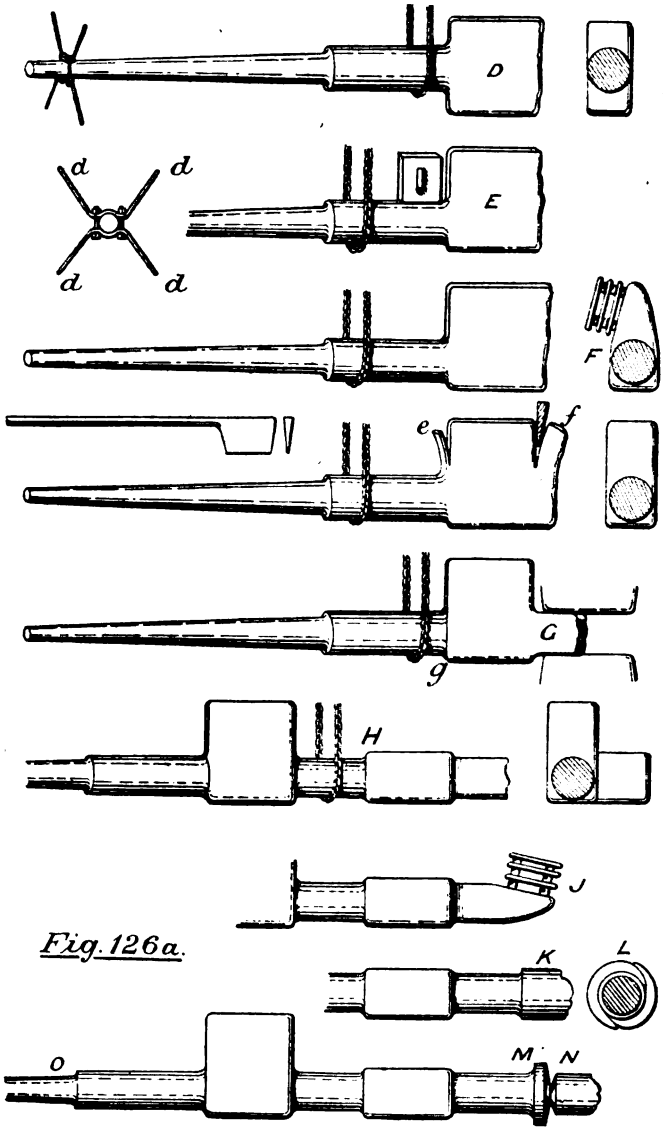

Fig. 126a.

Large Crank Shaft (continued)

Digitized by Google

be carefully built at right angles; this point, as well as that of the general straightness of the shaft must be gauged with square and straight-edge by the head forgeman, as the work progresses.

By this time then our forging has reached the condition H, and as the sketch A, Fig. 126, shows us a solid collar, for the purpose of coupling to another shaft, we must add this portion. Slabs are again piled up as at J, Fig. 126*a*, heated and welded, until sufficient stuff has been worked together to form a small collar K, and then the whole collar can be finished either by the slab method, or scarfed bars (L) can be wrapped round the shaft and thoroughly welded. Finally the collar can be chipped down at M to the correct length, and cut off entirely at N. There only remains the porter end O, which may be finished by taking off the handles, and clamping them at the collar end, then putting the porter through the furnace till it protrudes at the further door, and after heating cutting it off to the length shown on the drawing. The shaft is then set aside to cool.

Steel Shafts are forged from ingots (obtained by any of the processes mentioned in Chap. III.), and being thus treated from a solid block, differ in no sense, except size, from the example shown in Fig. 119. Some makers prefer, after flattening the ingot to the thickness and height of the crank webs, to set down the central portion of the shaft, forging each web in the same plane; and afterwards, to turn one web at right angles to the other by twisting the shaft; but there can be little doubt that this is an objectionable method, and should never be resorted to. A good deal of care, in the case of steel, should be taken to get rid of the blow-holes previously mentioned as existing in the ingots, and as simple hammering is usually insufficient, *cogging* is the operation performed, which consists in partly punching the steel while hot immediately over any portion where honeycombing is suspected—a sort of kneading, in fact.

After the careful description of the crank-shaft forging, a short explanation will suffice for the following articles—*Piston-rod* with *Cross-head*, and a *Connecting-rod*. Whenever such forgings are made of wrought iron they are built up from scrap as in the case of the shaft, such scrap consisting of all kinds of wrought iron,

Digitized by Google

especially the shearings of plates from the Boiler Yard, and this being worked over and over again in the manner previously described we naturally obtain a better quality of iron than that which has been but once puddled. Another point to notice is that the slabs should all be perfectly welded by good hammering *before* the forging is actually formed to the required shape, for much working after cutting to proper dimension will cause distortion; while if, on the other hand, sufficient hammering is not given to the slabs, cracks are sure to show after machining, and the piece will be dangerously weak.

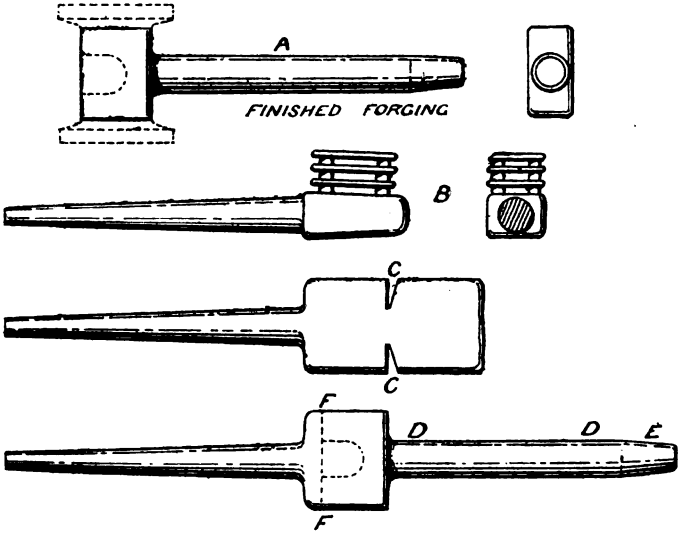

Fig. 127.
Piston Rod.

Fig. 127 will serve to show the forging of the **Piston-rod.** Its finished form is given at A, the cross-head being solid with the rod, and having renewable 'slippers' of cast iron. Slabs are piled on the porter to form the cross-head, as at B, first on one side and then on the other; sufficient, if possible, to complete both

Digitized by Google

cross-head and rod. The shoulder of the butt is next knifed out at C, and the rod drawn down and swaged as shown at D, the taper given at E, and the whole cut off to proper length. Finally, the porter is put through the furnace, as in the case of the crank shaft, the clamps being transferred to E, and the butt end finished by cutting off at F to the correct length.

The **Connecting-rod** in Fig. 128 is a little more difficult,

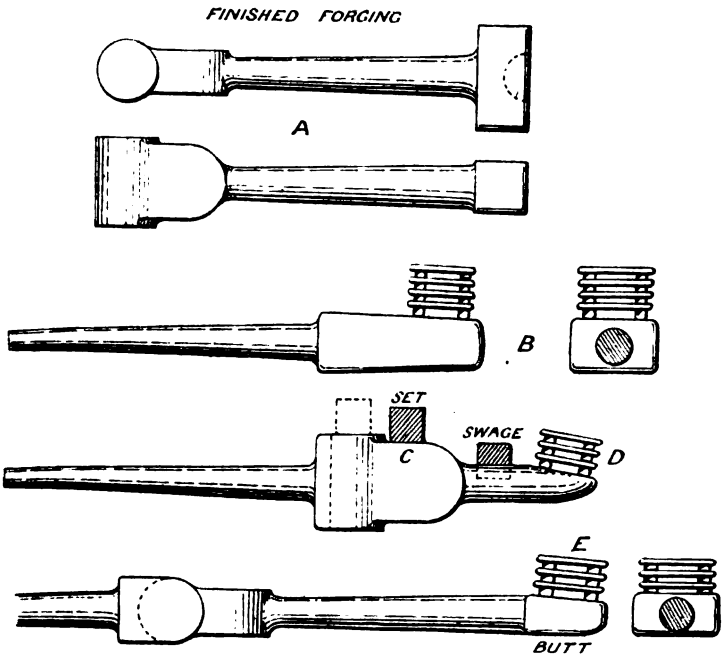

Fig. 128.

Connecting Rod.

but no new principle is involved. A is the finished rod. Sufficient material is first attached to the porter to make the forked end and about half or more of the rod. This is shown in progress at B. It is next drawn down by sets and swages to the form C, and

Digitized by Google

more slabs are piled on to complete the rod and butt (*see* D and E). No further description will be needed to finish the forging, as there only remains the cutting off of the butt end to correct dimension, and the severing of porter from forging as in the previous examples.

Want of further space compels us to close our chapter on Forging, but sufficient examples have no doubt been given to stimulate the student, who will now without difficulty be able to construct other forgings for himself, albeit more complicated than those already given. Of course different workmen have slightly different ways of arranging their material, and no two will exactly agree, but that forging will be the best one where the fibre is disposed so as to meet in the best way the stress coming upon it.

Digitized by Google

CHAPTER V.

MACHINE TOOLS.

THE pattern maker, moulder, and smith having supplied us with rough castings and forgings, it is now necessary to finish these articles truly before passing them on to the erector. After marking or measuring-off, certain portions of metal have to be removed by hand or machine tools. The remainder of our work will then consist of—*Marking-off*, or indicating the finished outline by a boundary mark; *Machining*, or removing superfluous material by automatic or semi-automatic machine power; and *Fitting*, which is the finishing of certain parts by hand power, usually the chisel and file.

Machining has always tended to gradually usurp fitting by hand, and its advance is so rapid at present as entirely to take the place of handwork for such articles as are to be repeated; in such instances manufacturers have special machines designed. Even in unrepeated work a much larger quantity is done by machine than hitherto, perhaps most of all by the extended use of such tools as milling machines.

As so much depends on the perfection of a machine tool itself (the workmen merely 'setting' the work and arranging speeds), a thorough knowledge of these machines is necessary, so as to appreciate their capabilities and enable us to design work to suit them.

The next chapter has been reserved for the *operations* of marking-off, machining, and erecting, the present being devoted to the **Machines** themselves, which may be classified as *Lathes; Planing, Shaping and Slotting Machines; Boring and Drilling Machines;* and *Milling Machines.*

Of course there are many *general* varieties of each class, and each variety is again varied to suit special needs. Thus, as regards drilling machines, most inland workshops are supplied

Digitized by Google

with *vertical* drills, but marine shops require also *horizontal* drills for drilling bolt holes in solid couplings on shafts too long to stand under a vertical machine. Again, up to a certain size, the usual form of boring machine is that having horizontal boring bar; but a vertical bar is preferred by many engineers for the largest cylinders, to secure a more accurately bored surface, by thus balancing the heavy boring head. Planing machines generally have the work bolted to a moving table travelling under a fixed tool, but some large machines have been made with moving tool and stationary work, analogous to slotting and shaping machines.

It will be seen, therefore, that it would be a very large task to adequately describe even every *important* machine tool. The only course open is to choose such as are typical of *their* division of the four before-mentioned types, and first we shall give a few

General Principles.—Of all the tools enumerated the lathe was the earliest invented, beginning, according to the principles of evolution, as a reciprocating machine, that is, it revolved in either direction alternately, there being no crank and rod to give it continuous rotation; and the *forward* motion only was effective, the *backward* revolution being lost. Planing, slotting, and shaping machines are present examples of this early stage, as far as reciprocation is concerned. But it is not easy to give these tools a continuous action; reversible tool holders, or tools, have both been tried, but seem to lack rigidity, and no doubt the difficulty is to be surmounted by a *revolving tool*, as in the milling machine, reciprocation only giving the *feed*, a similar evolution to that of the circular saw, band saw, and wood planing machine, which all began as reciprocating hand tools. (*See Appendix III.*)

The milling machine has only one objection, the expense of the cutter, which is also troublesome to sharpen and difficult to keep to proper profile, and the boss must be finally discarded. The latter objection has been met by separate cutters, more easily re-ground, the stock being retained.

In the lathe, then, we have a stationary tool, and revolving work receiving a *cylindrical surface*; while the milling machine has a revolving tool and stationary work taking (by the aid of the

Digitized by Google

feed) a *plane surface;* and nothing could be more satisfactory. If this be the completion of the cycle, as we suppose, then the reciprocating tools, with lost back-stroke, must ultimately give way.

The Copying Principle is another great principle involved in both hand and machine tools. All depend for their accuracy on one or more carefully-prepared *copies* contained within the tool. Thus in the carpenter's chisel the flat back is held against the wood when paring, and constitutes the copy. The sole of a hand plane serves the same purpose, its truth or otherwise being copied on the work, which may be proved by curving the sole, and thus obtaining curved surfaces.

The copying principle is universal. Take the lathe: the bed has a plane surface truly parallel to the line of centres, thus enabling us to produce a true cylinder as our solid of revolution. A second slide at right angles to the former gives us a copy for use in 'surfacing,' producing plane ends or *right* cylinders.

The **V** grooves of the planing machine give accuracy along the table, while the cross beam or slide ensures truth across it, and so we obtain a true plane. The vertical slide and the two horizontal cross slides are the copies in the slotting machine, while the shaping machine has two copies supplied by the horizontal slides, at right angles. Lastly, the milling machine has two slides, at right angles and also horizontal.

As the truth or otherwise of these copies is transferred to the work, it is of the utmost importance that they should be made perfectly correct in the first instance.

The copying lathe and other duplex wood-working machines are further examples of the principle, but are beyond this work.

Cutting Tools.—We will now consider the shapes and angles required for the tool itself. As a rule wood-working tools act by wedging, or splitting-off the shaving; and the resistance is tensile, with some bending. Our interest is with cutting tools for metal, and Prof. R. H. Smith has shown their action to be totally different.

The diagram Fig. 129 represents the tool in action. B is the

Digitized by Google

angle of relief or clearance angle, to keep the tool clear of the work; A the *cutting angle*, and C the *tool angle.*

The point C requires great strength for metal tooling, and as this makes A very large, 'paring' cannot occur, but the material will be 'crippled,' either by compression, shear, or a combination of both. Sections parallel to F G will be in compression, and those parallel to E G in shear, and it will be evident that along

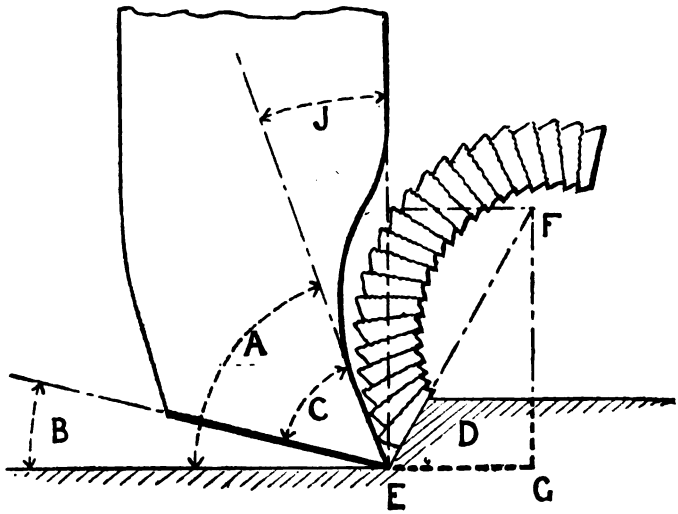

Fig. 129.

Action of tool in cutting metal

some section E F, the material will be weakened to the greatest extent; here then the shaving breaks so much as to curve up the face of the tool. The direction of E F will depend on the relative values of the compression and shear strengths of the material.

Great heat is generated, due to molecular resistance and friction. A lubricant of soap and water* is used for ductile materials like wrought iron, contained in a can placed above the tool-box, and led to the tool point by a wire, down which it

* Or soda, if rusting is to be avoided.

Digitized by Google

trickles. This cools the tool, and lessens the friction between tool and shaving. For cast iron and brass these precautions are not needed.

There has been, up to the present, some diversity of language regarding the angles A, B, and C (Fig. 129). Thus, in the planing tool, A has been termed the cutting angle, while in the lathe tool C has been so called. Manifestly the first is the more reliable nomenclature; then C may be called the angle of the tool.

Their values were determined by Hart thus:—

	For cast iron.	For wrought iron.	For brass.
Cutting angle	54°	55°	66°
Relief angle	3°	4°	3°
Tool angle	51°	51°	63°

This supposed the least force of propulsion was required. But if endurance of point be considered, a larger angle is usually given, as follows:—

	For cast iron.	For wrought iron.	For brass.
Cutting angle	70°	65°	80°
Relief angle	3°	4°	3°
Tool angle	67°	61°	77°

In a lathe tool B is termed the *bottom rake*, and J the *top rake*, while a third angle with top of tool, but on right *or* left side, is called *side rake*.

These angles will serve for any machine, and the shape of tool and shank will be treated in its proper place.

The Screw-cutting Lathe.—Plate V. shows various views of this, the oldest but most useful tool. The example is the design of the Britannia Company, and has 10 in. centres, that is, will accommodate work of 20 in. diameter (called in America a 20 in. lathe). 40 in. work can be turned by removing the gap bridge A, which is bolted down and dowelled, so as to allow the saddle to pass over it freely.

In all lathes the work is rotated, and the tool fixed in (usually) a *slide rest*, which can be moved along the lathe bed. This appliance, the very foundation of machine-tool accuracy, was the invention of Henry Maudslay. On account of the various diameters to be turned, the angular velocity must be capable of

Digitized by Google

variation, for the linear velocity at the surface of the work must be constant. Fig. 133 shows that if ab and $a_1 b_1$ are equal, the angle $a_1 c b_1$ must be greater than $a c b$.

Let R = radius of work in feet.
V = speed of cut in feet per minute.
N = revolutions per minute to produce V.

Then, $2\pi RN = V$ and, $N = \frac{V}{2\pi R}$

And as the cutting speeds are, say :—

For brass	30	feet per min.
For gun metal.....	25	,, ,,
For cast iron	20	,, ,,
For wrought iron	16	,, ,,
For steel.....	12	,, ,,

We have :—

Revolutions per m. for brass	= 57 ÷	rad. in ins.
,, ,, gun metal ...	= 48 ÷	,,
,, ,, cast iron ...	= 38 ÷	,,
,, ,, wrought iron	= 31 ÷	,,
,, ,, steel	= 23 ÷	,,

To effect this variation without altering the angular velocity of the main shaft, cone pulleys and back gear are employed.

The cone pulley C is driven by a belt, from a like pulley on the countershaft overhead, but the latter is reversed end for end, so that its small diameter is opposite the large diameter on the headstock. As the sum of driving and driven pulley diameters is constant, the belt will fit any pair, and a change of velocity will be effected, the highest being due to the smallest pulley on the head-stock. (See Fig. 539, p. 533.)

But as sufficient variation cannot thus be obtained we use the spur wheels known as back gear. The mandrel D (Figs. 131 and 134) is attached directly to the work by a driver. But the cone pulley runs loose upon the mandrel. Referring to Fig. 134, the bolt E serves to connect the pulley with the wheel F, which is keyed to D, and by sliding E radially outward till it engages between lugs G on the pulley, F and C are united, and the mandrel is driven *directly*.

Slower speeds are obtained by releasing E, and allowing the

Digitized by Google

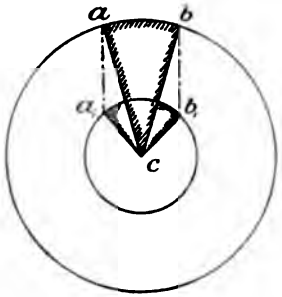

Fig. 133.

SHEWING VARYING ANGULAR VELOCITY REQUIRED IN LATHE

Diagrams

SHEWING VARYING ANGULAR VELOCITY OBTAINABLE IN LATHE

Fig. 137.

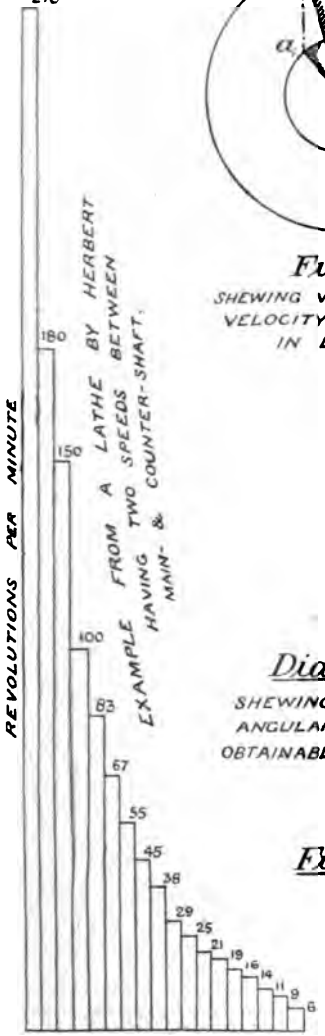

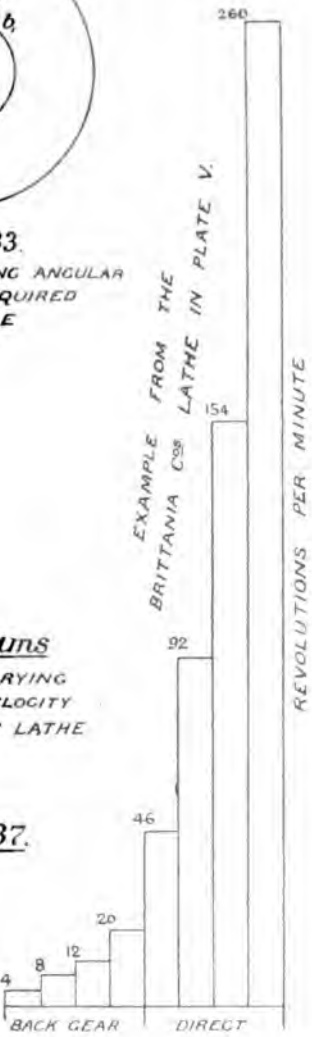

Digitized by Google

pulley to run freely on the mandrel, when the latter is driven only through the back gear (Fig. 131), the pinion H gearing with wheel J, while the motion is brought back by pinion K and wheel F, thus obtaining a new set of speeds *on a slower scale.* The diameters on the pulley are here 13", 10⅝", 8¼", 6"; the wheels J and F have each 42 teeth, and the pinions H and K 12 teeth. Supposing the countershaft to make 120 revolutions per min. we have on mandrel :—

REVOLUTIONS PER MINUTE

With back gear.	Without back gear.
4 ... 8 ... 12 ... 20	46 ... 92 ... 154 ... 260

which is represented by diagram at Fig. 137; and the workman chooses such pulleys as will give the correct cutting speed.

We have shown that when driving direct the cone pulley and wheel F are connected; at the same time J and K must be thrown out of gear. Both are keyed to the hollow shaft L, revolving on the spindle M, which is supported in eccentric bearings N N. A 'tommy' (or short rod used as a key) is inserted at the left end and the spindle M is turned half-round so as to throw the centres of J and K further from D, and so disengage these wheels.

The mandrel journals are cones rotating in brass bushes (Fig. 134). Of these the left-hand one is hollow, and rests on a feather key, so that it may be tightened up after wear, by screwing up the nut P and the check nut Q. The thrust of the work is taken on the end R when surfacing, and the head-stock is adjusted to secure parallelism by means of the screws in Figs. 135 and 136.

As the *fast* head-stock just described has an unchangeable position, the tail or *loose* head-stock must be adjustable for different lengths of work. It is shown in section at Fig. 138, and is fixed approximately by the bolt and clamp S, after which the work is placed between the centres, and a fine adjustment given by rotating the hand wheel T, so pushing out the inner barrel U (which acts as a nut with a left-hand screw), after which the handle V is used to clamp the barrel securely. Lateral adjustment of head-stock (when necessary) is given by the screw W.

Fig. 139 gives the form of centre to support the work. It is shown in position in Figs. 130 and 131, being merely placed in conical holes of fine taper, and has a flat surface for use with spanner.

Digitized by Google

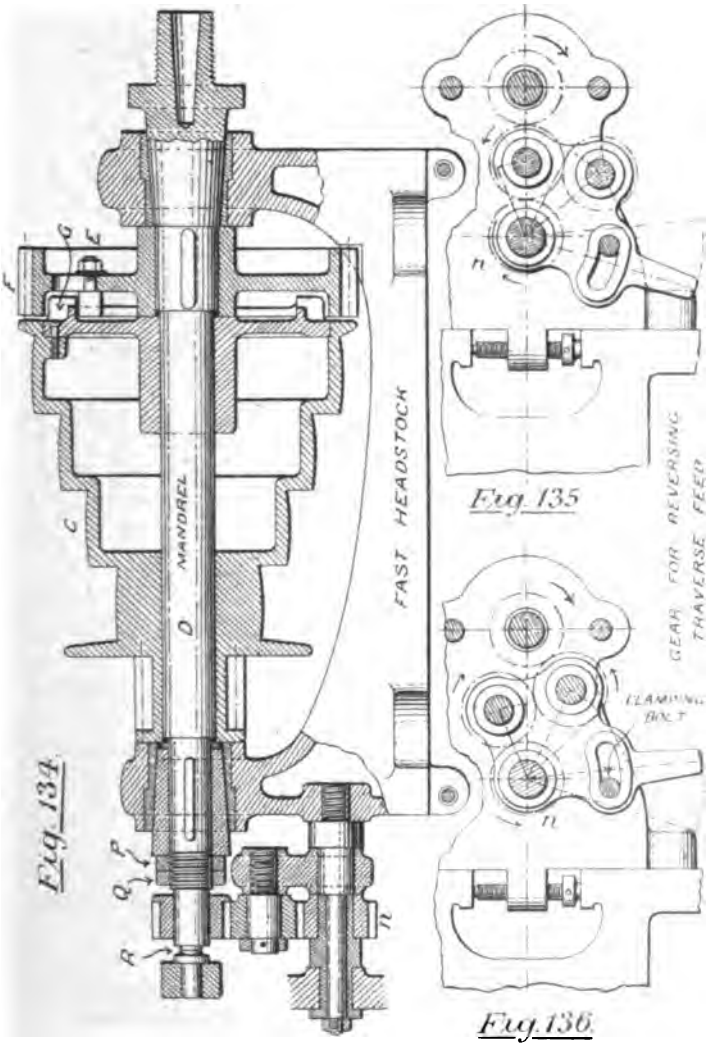

Details for 10" Lathe.

Digitized by Google

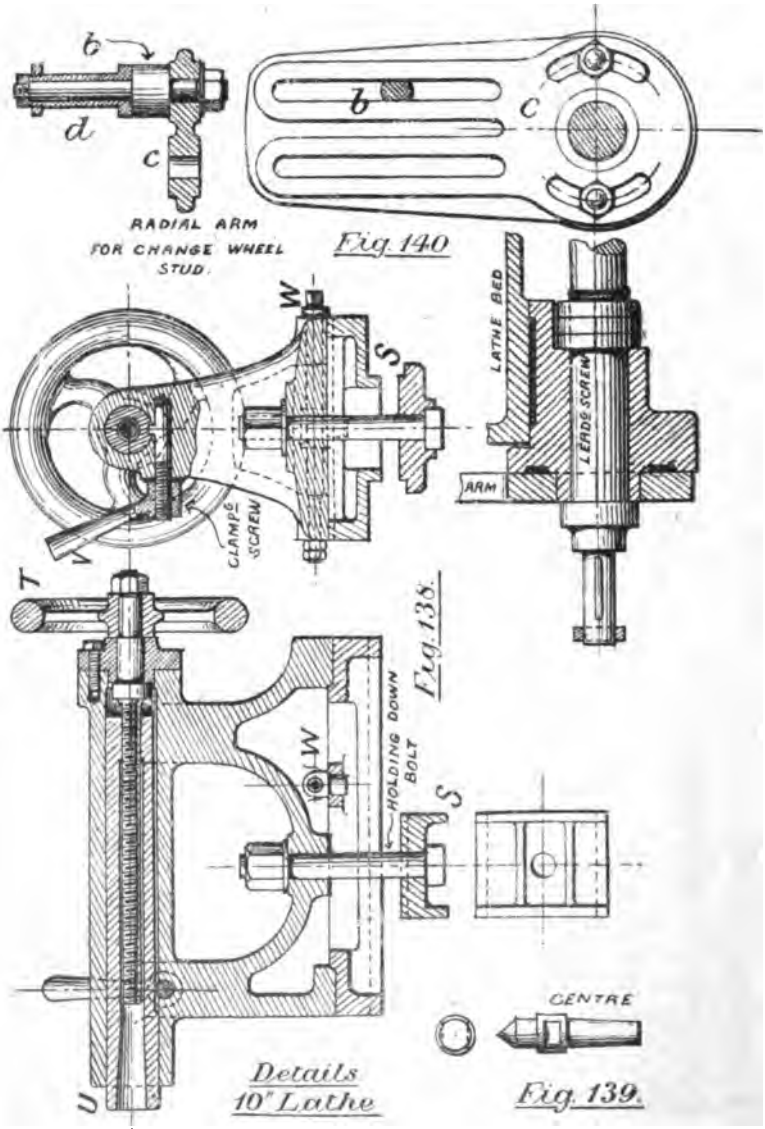

Digitized by Google

Turning to the *Slide-rest* and its various feed motions, details are shown in Figs. 130, 131, 141, and 142. X is the saddle, having one movement, that *along* the bed; Y is the middle slide, moving *across* the bed: and the top slide Z has a universal motion, but by hand, being mounted on a circular table formed on Y; and thus a feed may be obtained at any angle by turning the upper plate Z and clamping the bolts *a a*.

The movement of X is called *traversing* or *sliding*, and the cross-movement of Y *surfacing;* these can be combined if required. The slide rest is actuated from the mandrel in two distinct ways. The *leading screw* at the front of the lathe bed is only used for screw cutting, and is thus preserved from wear at other times. It is driven by '*change wheels*,' at the left end of bed (Fig. 132). These can be changed, so that various rates of rotation of screw can be effected, relative to that of the mandrel, which comparison fixes the fineness of thread cut on the work. To facilitate the fixing of the wheels chosen, the intermediate stud *b* is supported (Figs. 130 and 140) on a radial arm or quadrant *c*, which can be clamped at various angles, the two wheels on *b* being together by keying to a loose sleeve *d*. The saddle and fastened leading screw are connected or disconnected by the two half nuts *e e* (shown apart in Fig. 141), which are brought together by moving the handle downward along the dotted arc, when the studs *f f*, carrying the nuts, are brought nearer the centre by means of the curved grooves.

The slide rest is also worked from the back shaft *h* on the opposite side of the bed, and the two feeds for surfacing and sliding obtained. The shaft is driven from the mandrel by change wheels (shown dotted at *g*, Fig. 131), the intermediates being carried on the arm *c*. Some makers drive by belt, which may slip if the machine is being overworked, but there is no doubt that wheels give a more definite feed. Passing to the connection of shaft with saddle we refer to Figs, 141 and 130. A worm *j*, having a feather key, slides along the back shaft, being drawn along by the saddle. The power passes through an intermediate worm pinion 2 to the wheel 3, which, being keyed on spindle *k*, crossing the bed, rotates pinion 4 on the front side. This pinion, gearing into wheel 5, turns the rack pinion 6, and the traverse is

Digitized by Google

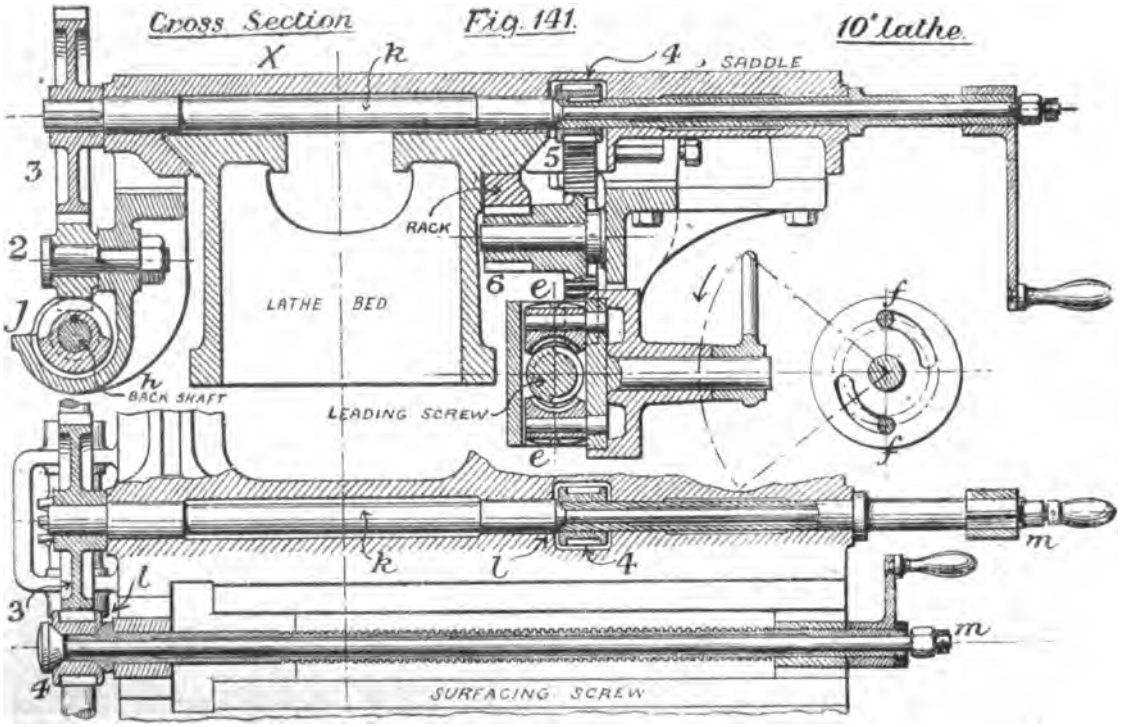

Digitized by Google

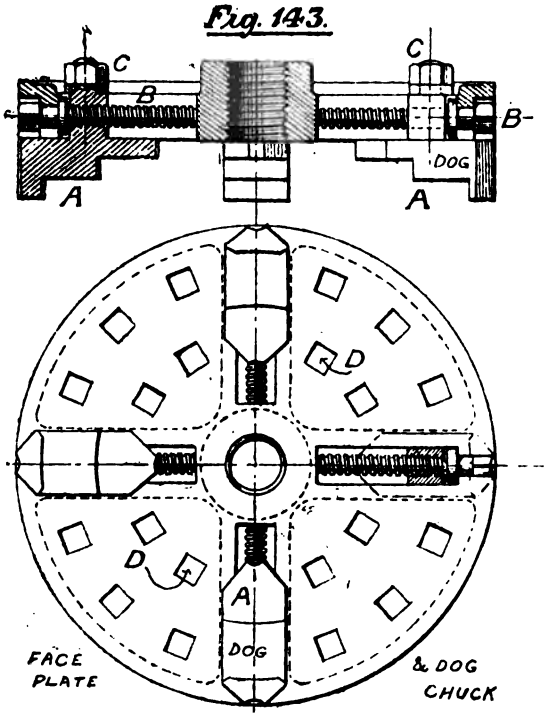

Fig. 143.

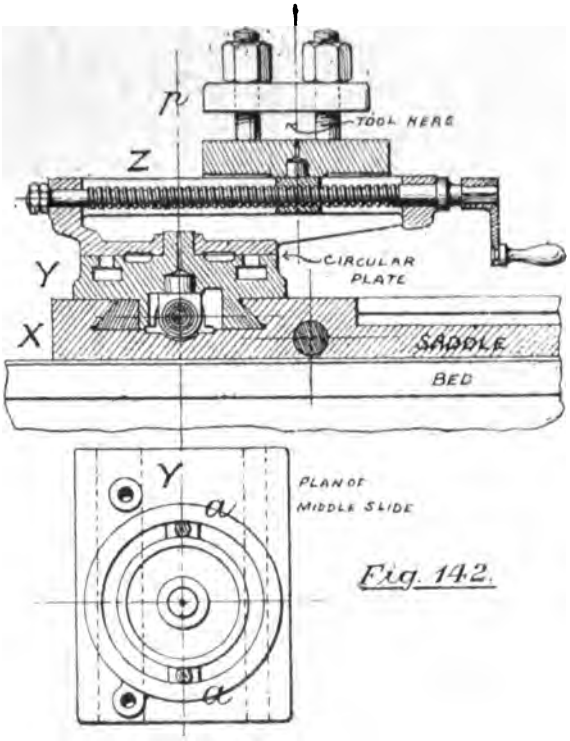

Fig. 142.

Digitized by Google

obtained. The wheel 3 also gears into the pinion 4 on the surfacing screw, and the one feed or the other may be operated at will on screwing up either of the friction clutches *l l* by nuts *m m*. The wheel teeth at the back are all inclined so as to gear with worm wheel 2.

These various motions are reversible, for convenience in screw cutting or traversing—(1) to obtain right or left-handed threads as required; (2) to traverse plain work in both directions and secure greater accuracy. To effect such reversal three small wheels are used (Figs. 135 and 136), supported on a frame or 'rocker,' turning on a stud *n*. When clamped as in Fig. 135, a right-handed rotation of the mandrel will give the same motion to wheel *n*; but if changed to position in Fig. 136, a left-handed rotation of *n* is obtained. This is done without stopping the machine.

Supporting the Work in the Lathe.—It is now necessary to show how the work is carried. If a long bar or spindle, it must be *centred*. Being probably somewhat bent, it is to be first straightened until it satisfies the eye; and the centre next is marked on the ends, either by *centreing square*, as in Fig. 144, drawing the dotted lines shown, or by conical punch, as in Fig. 145. The latter, being held vertically, is tapped with a hammer. The centre is now found, at least for the end portions (the most important, because rest of bar can be straightened to suit); it is next punched, with hand centre-punch, so deep as to just support the bar in the lathe.* A 'square centre' is next placed in the loose head-stock; it is similar in shape to that in Fig. 139, but is sharpened on four sides only, instead of all round (*see* Fig. 146). Being hardened it serves as a tool for cutting the conical hole in the end of the work. Placing the bar between a conical centre in fast head-stock, and a square centre in loose head-stock, it is revolved carefully and marked with chalk where '*full*' (that is, stands out more than the average), which if very bad may compel us to further straighten the bar; then a crotch tool (Fig. 147) is placed in the rest against the bar, the latter being rotated rapidly, and the screw in the loose head-stock is turned so as to *very gradually* advance the square centre into the work. This centre hole must not be larger than necessary, and

* *See also* D, *Fig.* 228, *p.* 217.

Digitized by Google

PLATE V.

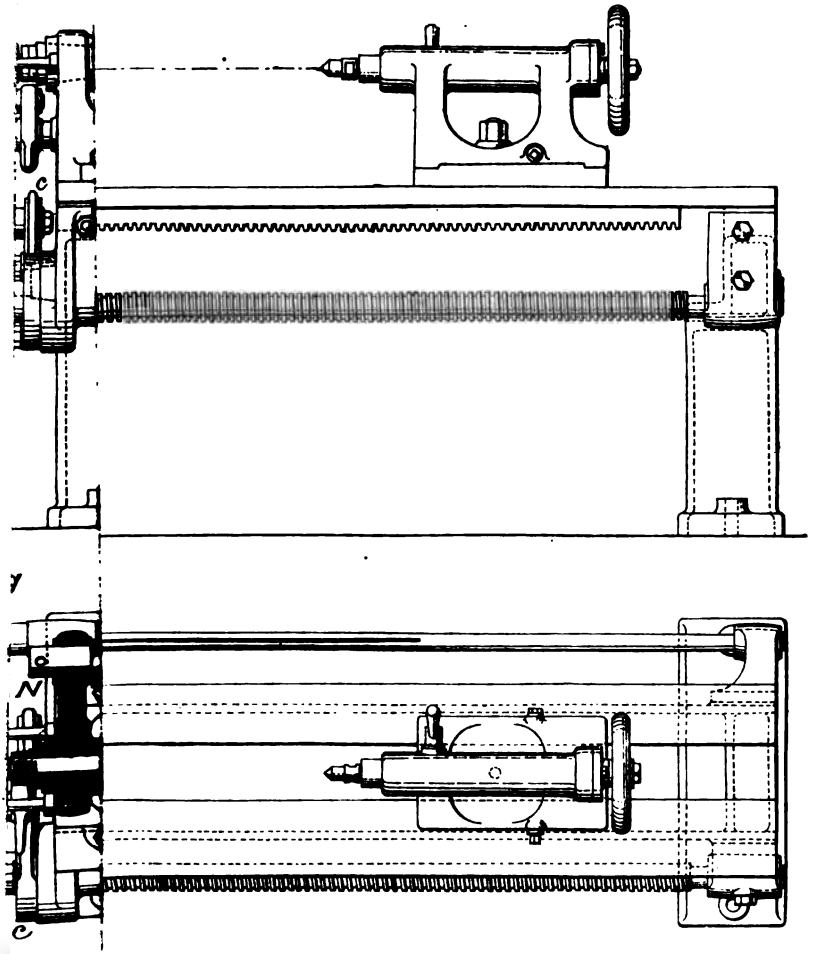

face p. 150.

Digitized by Google

Digitized by Google

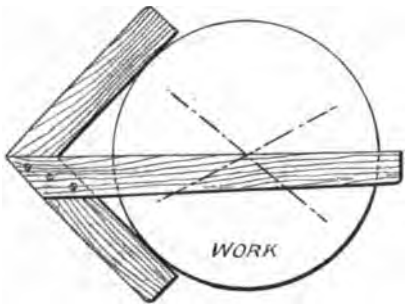

Centreing Square
(for large diameters)
Fig. 144.

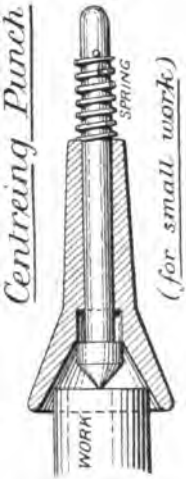

Fig. 145.

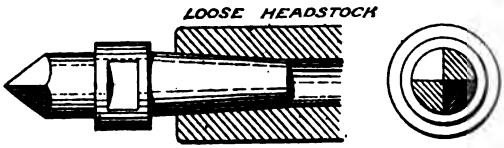

Square Centre Fig. 146

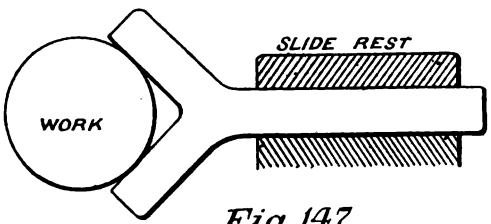

Fig. 147.
Crotch Tool.

Fig. 148.
Finished Centre

Digitized by Google

after finishing, a small hole should be further drilled (Fig. 148) to prevent the work bearing on lathe centre points. This may be :—

For work $\frac{1}{4}''$ to $\frac{1}{2}''$ dia.		$\frac{1}{32}''$ hole.
„ „ $\frac{5}{8}''$ „ $1''$ „		$\frac{1}{16}''$ „
„ „ $1\frac{1}{4}''$ „ $3''$ „		$\frac{1}{8}''$ „
„ „ $3\frac{1}{2}''$ and above		$\frac{5}{32}''$ „

and the countersink may be three times the drill diameter.

The lathe centres may have any angle at their apices from 60° (American practice) to 90° (English practice), but the square centre must be formed to give the same angle. Finally, the work is reversed, and the other end treated in like manner. (*See Appendices I. and II.*)

Square centreing may appear clumsy to many; it has, however, proved satisfactory, and is still much used. The countersink may be drilled by *hand brace*, but not so truly; the brace must always be used for the smaller hole. *Centreing machines* have been devised, but only for comparatively short work. The bar is centred and gripped by a chuck; the countersinking and small drills being afterwards advanced. (*See Appendix II.*)

Driving.—The above-mentioned bar is driven from the mandrel as in Fig. 149. A carrier A grips the end of the work, and a catch plate B, screwed on the mandrel, holds a stud C, projecting far enough to strike the carrier and rotate the work. The carrier shown will take work of varying diameter.

Other methods of support are by *Face Plate* and by various *chucks*. (*See Appendix I.*)

The Face Plate, Fig. 143, is here also a large *dog-chuck* having four jaws or dogs A A independently movable. It is screwed on to mandrel, the fit being very accurate, to ensure correct *surfacing* across it. The jaws are adjusted by box keys applied to the screws B B, until the work is centred and gripped, when the nuts C C are tightened, thereby relieving the screws.

The boss of a pulley may be bored in this chuck, the tool being held in the slide rest, and the traversing feed applied; while irregular articles can be clamped directly to the plate if the dogs are removed, and bolts put through the square holes D D. Such an arrangement would be that of a face plate proper.

Digitized by Google

Chucks.—Four examples of Whiton's chucks are shown in Figs. 150, 151, 152, and 153. The *Independent Chuck* (Fig. 150) is really a dog chuck. The screws may be turned by a square key at A, so far as to release the jaws altogether, which, being reversed, as at B, serve to hold drills when boring stationary work, or to take a longer grip on rotating work. Fig. 151 is a good example of a concentric or '*universal*' *scroll chuck*. Applying a key to the bevel pinion C, the wheel D is rotated, carrying on its opposite surface what, on reference to front view, is seen to be a

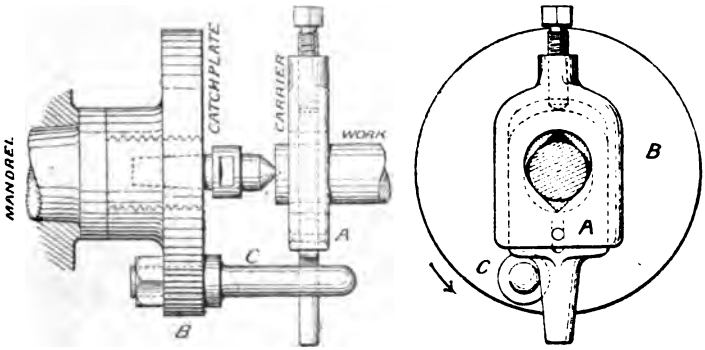

Fig. 149. Driving Arrangement.

spiral having three or four turns in its whole travel. The rotation of this 'scroll' moves the jaws nearer to or farther from the centre, *but equally*, thus centreing and gripping the work at the same time. Fig. 152 is a *Lever Chuck* having a scroll, but no gearing. A tommy is inserted at E to turn the scroll F, while the rest of the chuck G G is stationary. All these chucks are fastened to the mandrel in the same manner, by bolting to a small face plate screwed on the mandrel.

The *Drill Chuck* (Fig. 153) has the back portion H screwed on the mandrel, while the front part J carrying the jaws may be rotated; the scroll is therefore stationary while the jaws are carried round it. Hand tightening is sufficient for small drills, the surface of J being roughened for grip; greater tightness is obtained by using

Digitized by Google

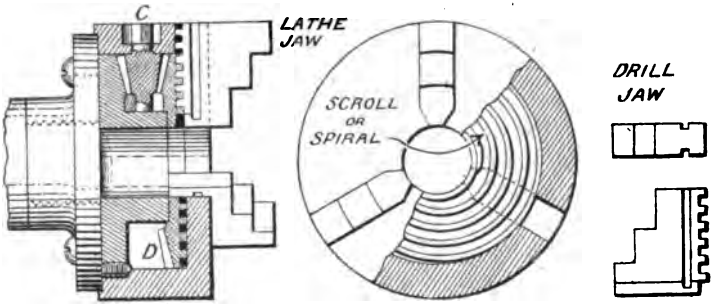

Fig. 151. **Geared Scroll Chuck.**

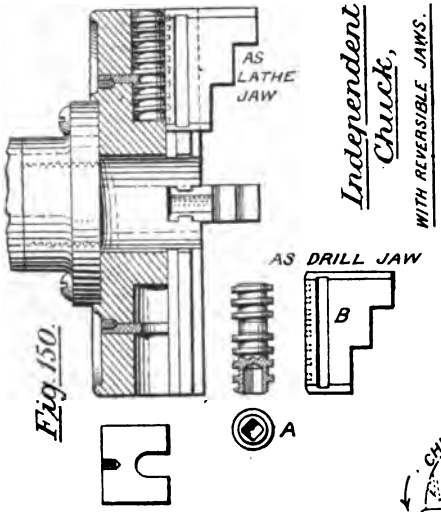

Fig. 150.

Independent Chuck, WITH REVERSIBLE JAWS.

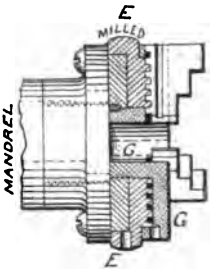

Fig. 152.
Lever Chuck.

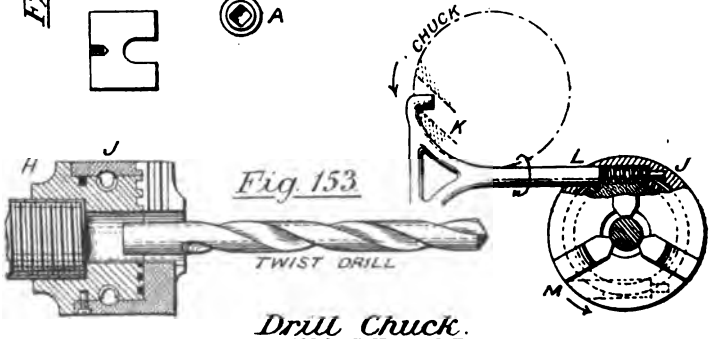

Fig. 153.
Drill Chuck.

Digitized by Google

the key as shown at K; and, finally, the worm end of the spindle is used, as at L, for large drills. As the worm only bears on J in one direction, it is applied at the opposite hole M to *release* the drill.

Chucks that are either *independent*, *universal*, or *eccentric* at will, are also made, having combinations of the foregoing motions.

Expanding Mandrel.—There is still another plan of support for work having a hole through its centre. It is fixed on a mandrel (or spindle that can be centred in the lathe), of which several sizes are kept, having a slight taper, one suitable for the work being chosen; but a more expeditious tool is the *expanding* mandrel in Fig. 154. The mandrel proper is coned at A, and has three grooves of the same inclination as the cone, in which

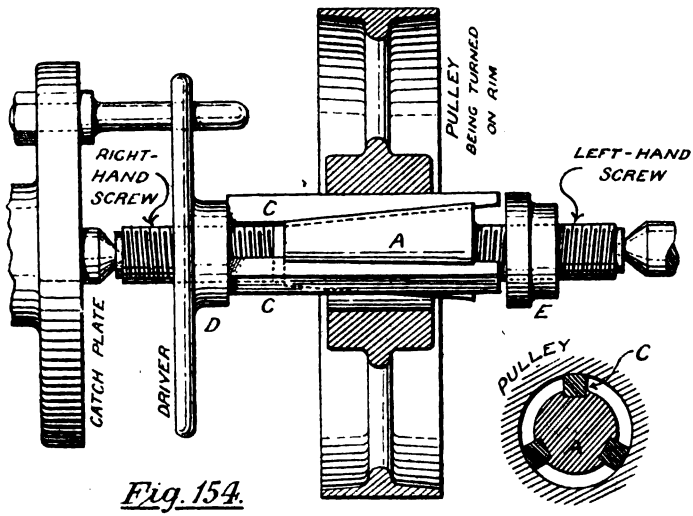

Fig. 154.

Noble's Expanding Mandrel.

ride keys so tapered that their outer surfaces form portions of one cylinder. The mandrel is screwed with right and left hand threads as shown, and the advance of nut D will push the bars C C up the incline, so expanding the cylinder to any diameter within the limit of the tool. D serves also as carrier for the work,

Digitized by Google

and nut E on the right is for releasing the keys or for steadying them. This tool is made by the Britannia Company.

Cutting Tools for Lathes.—There are various opinions on the proper shapes of these. Fig. 155 shows the most common, where A is the plan of a straight tool, B that of a right hand tool, and C of a left hand tool; D being elevation for all three. Their

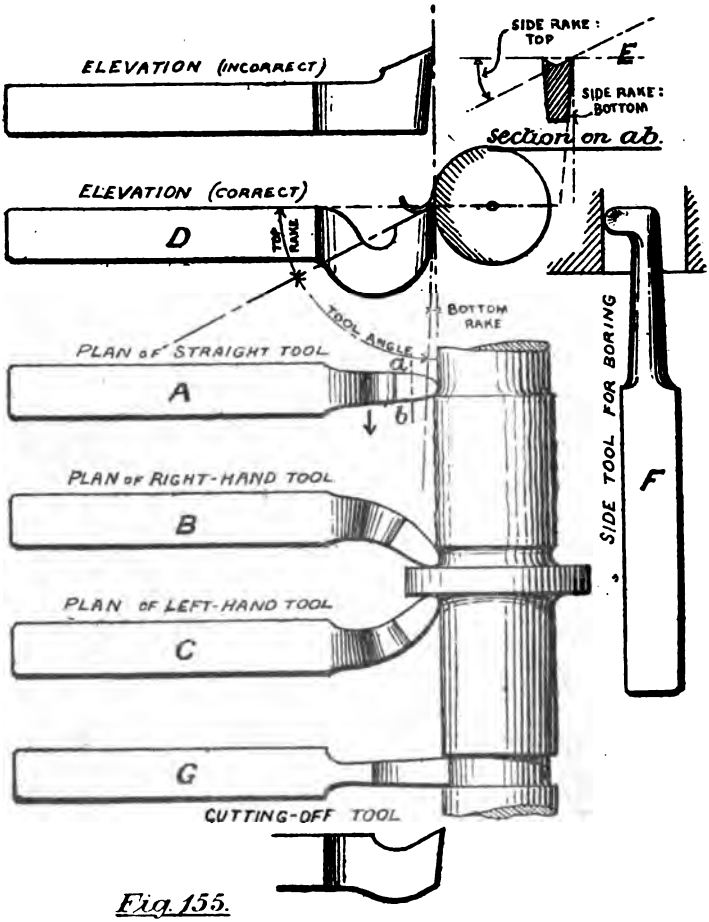

Fig. 155.

Cutting Tools for Lathes.

Digitized by Google

uses are there shown, by the cylinder of work at which each is engaged. Thus A is taking a traversing cut, while B and C turn the corners of a collar. Top and bottom rake, and tool angle, are indicated on D, and side rake must be given to all, for if the tool cuts to any depth, action must occur at the side as well as at the front. Section E shows the hollow cone required at top of tool, which is not easy to give in grinding, but may be approximated to. F is a side tool for boring work on the face plate, and G is a cutting-off or parting tool. These tools should all be set so that the point and the top surface of the tool are both at the level of the centre of the work. If set higher the tool spring will tend to lift it out of its cut, and if set lower it will give a tendency to 'dig.' The best method of clamping down the tool is seen in Figs. 130 and 131, Plate V., and in Fig. 142, where two plates, *p p*, are securely held over the tool by screwing down four nuts with a spanner. Space is provided between the bolts to allow for angular horizontal adjustment. The shanks of cutting tools should be of large dimensions, both for rigidity and for taking away the heat generated in cutting, otherwise the tool may be softened. A finishing cut is given with a tool having a broad flat nose. If the work spring considerably under the roughing cut, inaccuracy will result, which cannot be remedied by a single finishing cut, so two or three cuts are taken before the final one, and the bending pressure thereby *gradually reduced*. If the work be very small in comparison with length, a *back rest* is fixed on the saddle, forming a bearing which grasps the work near the tool, to prevent undue spring. (*See Appendices I. and II.*)

Tool Holders have been used for some time, to do away with the necessity for forging the tool when worn. These are shanks so shaped at the nose as to grip small pieces of steel, of suitable section for cutting purposes. They were first introduced by Messrs. Smith and Coventry. Fig. 156 shows several tool holders having various advantages. A has the best form, though the cutter is said to slip; B was designed to obviate that difficulty; and C is similar in principle to B, though slightly different in detail.

The Break Lathe (so called because of a large 'break' between bed and fast head-stock to admit a very large face-plate) is shown in Plate VI., as made by Messrs. Greenwood & Batley.

Digitized by Google

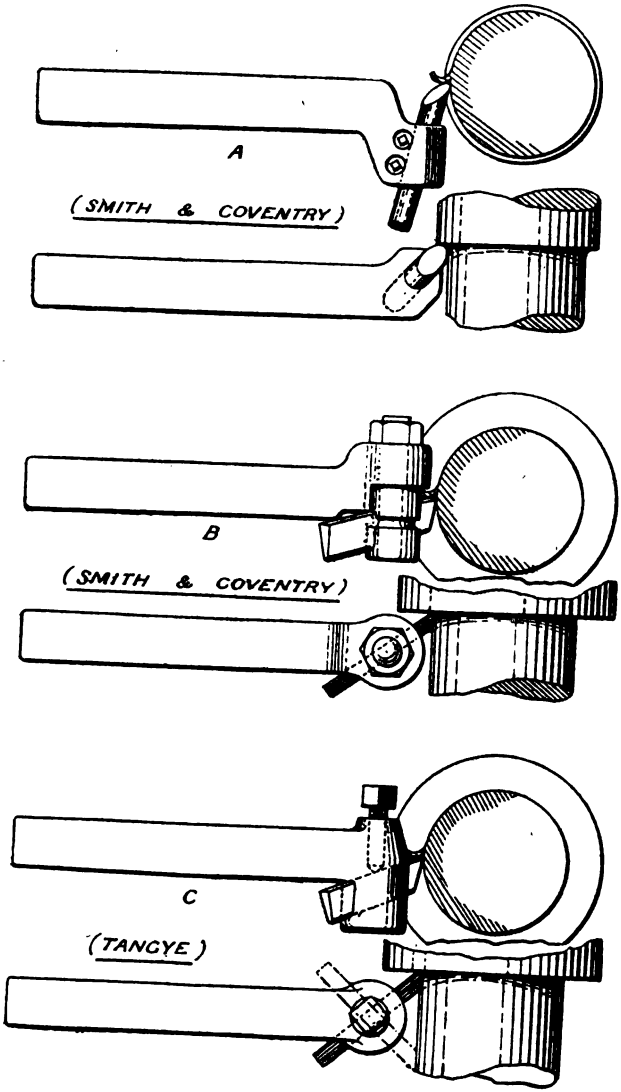

Tool Holders Fig. 156.

Digitized by Google

The fast head-stock B has a large cylindrical bearing at C, with adjustable cap, while the pressure of the surfacing cut is taken by the collars of the thrust bearing D. The face plate requires no further description than that given for Fig. 143, except to say that the jaw screws themselves take the grip, and that the jaw boxes may be unbolted and the work attached directly to the plate. The back of the plate has an annular spur wheel, driven by a system of 'treble gear.' We may turn the mandrel through the four wheels E F G H in simple back gear; or directly, bolting H to the cone pulley, and throwing out F and G by turning eccentric bushes; but if a slower speed be desired G is slid to the right, E and F kept in gear, while wheel K and pinion M, keyed to the third shaft L, are moved to engage respectively with pinion J and wheel N on face plate.

We have, therefore, three alternatives:—Direct driving without gear; double-purchase gear, E into F, and G into H; or treble-purchase gear, E into F, J into K, and M into N. The latter is only required for large diameters of work.

The leading screw, lying within the lathe-bed at A, is driven, by change wheels P, through shaft Q, and wheels R R at the right end of bed. By removing the change wheels, the backshafts may be put in gear, the power being taken from the belt T, passing thence to the worm shaft U by spur wheels, and across to the rack pinion, as in the previous lathe. The handle V will pull the lever W, and clamp the leading screw nuts, while the traversing motion may be reversed at X. The slide rest has the same motions as have been described for Plate V., and the loose head-stock needs no further description.

This machine is used:—(1) As a screw-cutting lathe with or without gap; (2) as a *face lathe.* For the first the gap may be varied by loosening the bolts which hold the bed Y to the foundation Z; and by then applying a lever to boss K to turn a rack pinion *b b*, so bring the bed nearer the face plate, the standard *d* being also removed. The work would be supported between the lathe centres, and driven by a bolt in the face plate, or by small drivers as usual.

As a **Face Lathe**, the gap is widened; and the upper parts *e f g* of the slide rest being removed, they are bolted on the

Digitized by Google

standard at *h*, which has a circular T groove to receive the clamping bolts, and admit of adjustment at various horizontal angles, thus obtaining a traversing, surfacing, or oblique feed. The position of the standard is adjusted by loosening its foundation bolts, and applying a crowbar to the teeth *j j*. Feed is given by hand, but can be made automatic as a *star feed*, or by an overhead chain. By the former a star piece is keyed to the slide screw, and a projection on the face plate catches this at every revolution, giving it a small turn. By the second, a chain attached to a crank pin on left end of mandrel, and passing along overhead pullies, actuates a ratchet on the slide screw, and gives a small feed at each rotation.

If a face lathe be especially made for surfacing and very short traversing, the bed is placed *across* the line of centres. (*See Appendix II.*)

The Boring Machine.—Figs. 161 and 162, Plate VII., represent two views of a horizontal boring machine designed by Messrs. Buckton & Co. As already mentioned, many boring machines are made with vertical bars, as for marine engine cylinders, the object being to balance the boring head, and preserve truth of surface; but if the bar be made very large and rigid, as in the example, inaccuracy need not be feared. There are two classes of horizontal machine: in one the work is fixed on a stationary bed, while the cutters travel, and in the other the bed and work are advanced, the cutter bar having no longitudinal movement. The latter is analogous to lathe boring. (*See Appendix II.*)

Referring to Figs. 130 and 131, Plate V., a cylindrical bar is placed between the lathe centres, and driven by catch plate. About half-way along this bar a longitudinal slot is made through it, and a projecting cutter securely wedged therein. The upper slides Y and Z being removed, as well as the bearings *q* and *r*, Fig. 131 (made separate for the purpose), the work is bolted to saddle X, by bolts placed in T grooves S S, and, as the bar rotates and gives the cut, the traversing feed advances the work to the tool.

Boring machines are made on these principles, being, in fact, lathes specially designed for boring. The bed is made low, and the fast head-stock high, the loose head-stock dispensed with, and

Digitized by Google

PLATE VI.

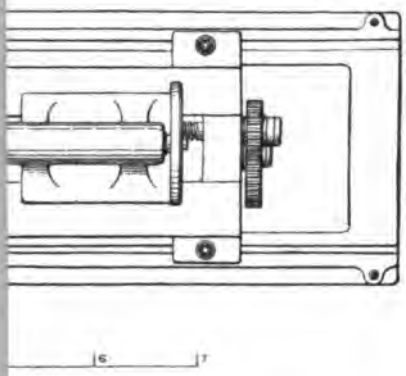

Fig 160.

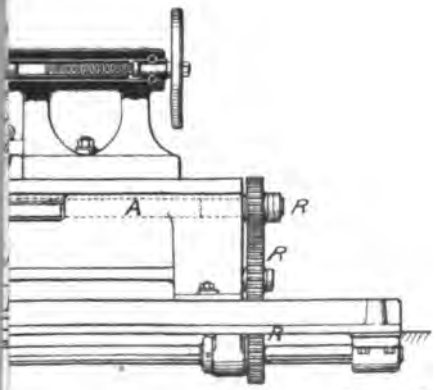

face p. 160

Digitized by Google

Digitized by Google

a bearing for the bar used instead. A table carrying the work is vertically adjusted by a screw, to accommodate various depths of work. (*See also Fig.* 249, *p.* 237.)

For large work, however, we have recourse to a machine similar to that in Plate VII., which is there driven by an engine fixed to the bed. We will first describe it as though driven by belt from main shaft, the usual plan. The worm shaft A would be provided with a large cone pulley to take the power from the main shaft, and to give various rates of rotation to the machine. The worm B and worm wheel C effect a slow rotation of the boring bar D, upon which is the facing head L, for surfacing the flange of any cylinder bolted to the bed E; the tools F F being shown in position. Each star H catches the stop J after every complete revolution, and gives a small turn to the feed screw. Next on the bar is the boring head K, carrying alternately in notches on its circumference cutters or dummies, the latter to steady the head in the cylinder and prevent 'chattering'; this is seen also at Fig. 163. As the head revolves, it is fed slowly along the bar. Referring to Figs. 162 and 163 it is seen that the head has a nut M screwed on its inner surface, and sliding in a groove in the bar. But the screw N engages with this nut, and it follows that any rotation of N will cause the head to advance, giving the feed. Such rotation is obtained by spur gear at the right end of bar, where four wheels P, Q, R, S form an epicyclic back gear, giving S a slightly quicker speed than P; this difference of velocity being communicated to the screw through the pinions T and U. When required, Q and R may be slid out of gear by unscrewing nut V, and the wheel W will then be used for hand feed or adjustment. (See p. 523.)

To describe the engine: *a* is the cylinder, and *b* the crank shaft, *c* the steam entrance, and *d* the exhaust. A fly wheel or crank shaft carries the crank pin, and the motion passes to the worm through bevel pinion and wheel *f* and *g*; the remaining gear being as before. We must not omit the ingenious method of altering the engine speed. The governor *h* is driven by a strap placed on cone pulleys *j j*, having an ample number of steps. If we attempt to give the governor a high velocity the tendency is to throttle the steam and produce a lower speed on the crank;

Digitized by Google

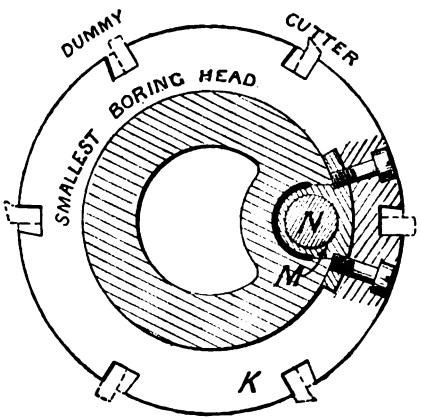

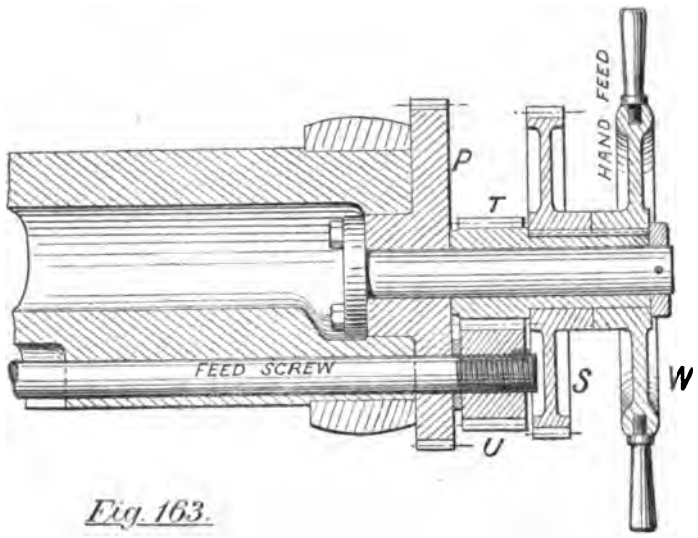

Fig. 163.

Sections of Boring Bar

Digitized by Google

PLATE VII.

INE COMBINED.

n & Co.)

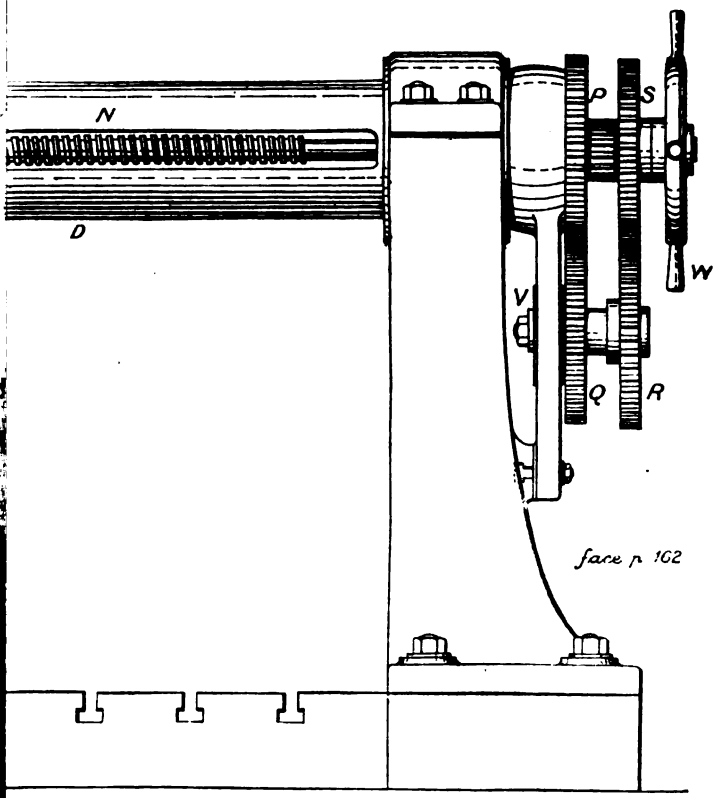

face p. 162

Digitized by Google

Digitized by Google

conversely, the effect of a decreased governor velocity is to admit more steam and increase the crank speed.

The Drilling Machine.—This, again, occurs under various forms, as double and single-geared, radial, and multiple drills. The last will be explained in Chapter VII., being applied to boiler work; the others we will describe in order.

The Double-Geared Drilling Machine is shown on Plate VIII., as made by Messrs. Smith, Beacock, & Tannett. The back gear is the same as in the lathe; thus the cone-pulley A may drive directly by bolting to wheel B, which is permanently keyed to the mandrel; or, loosing the belt C and putting wheels D and E respectively in gear with B and F, we may have a slower rotation of mandrel when drilling holes of large diameter; D and E are put in or out of gear by turning shaft *h* in eccentric bushes as usual. The revolutions of the mandrel are transferred to drill spindle by mitre wheels H and J; J being fixed to a sleeve K held between bearings L L, seen more clearly at Fig. 165. The sleeve K carries a feather key M, fitting in a long key-way in the drill spindle, thus allowing the latter to rise and fall. Passing upward, a smaller spindle N is attached by a pin, and forms one piece with M, while a loose sleeve P, having a rack formed on its right side, is held on the smaller spindle by nut Q and check-nut R. The rotation of a pinion S will thus raise or lower the drill spindle without affecting its rotation. Steel plates at T T diminish the wear caused by thrust of drill or weight of spindle.

The feed motion thus obtained is worked by hand or automatically. A worm wheel U, Fig. 164, on rack pinion shaft, is rotated by the worm on the spindle V, which takes its motion from the mandrel through another worm and worm-wheel W, driven by cone pulleys X X, to give varying rates of feed. If we wish to feed by hand, use is made of the arrangement at Y, shown in detail at Fig. 166. A race *z* is formed on the boss of the worm-wheel which drives the vertical spindle, and a small crank *a* serves to lift or lower the worm-wheel, to put it in or out of gear with the worm. The handle *b*, whose movement is limited by the groove *c*, is shown holding the wheel *out* of gear, when wheel *d* is used for hand feed or adjustment.

Coming to the table *e*, carrying the work; it is fastened by set

Digitized by Google

screw to a projecting arm *f*, and provided with slots for bolts, as in the lathe face plate. The pillar *g*, which supports *f*, has rack teeth turned upon it, so that the lifting apparatus may always remain in gear, whatever the position of arm *f*.

The lifting gear is as follows: A spindle *q* turns a worm, gearing into wheel *j*, which has on its axis a pinion engaging with teeth on the pillar *g*. The handle *k*, serves either for spindle *q*, or for hand drilling when applied to the mandrel. Some machines have a plain pillar, as in the next example. A very deep piece of work is accommodated by bolting to the foot or bed, and swinging the table out of the way.

In double-geared drills the countershaft is usually self-contained, as at *m*; and the pulley *n* is driven from main shaft; the fast and loose pulleys lying side by side, and the fork being moved by handle *p*.

The Single-Geared Drilling Machine in Fig. 167 needs little further description. Back gear is dispensed with, and the cone pulley A keyed to the mandrel. Hand drilling is provided for by the handle B on fly-wheel C. S is the hollow sleeve driven by mitre wheels; and a feed screw at D takes the place of the rack, being provided with a long key-way, while a key E (shown black) is fixed to spur wheel F, so that a feed may be obtained at any height of drill spindle. The feed screw further passes through a nut G, fixed to the casting H, and a rotation of F will therefore raise or lower the screw; such rotation being effected by turning the hand-wheel on spindle J, the latter carrying a pinion K gearing into F. A socket L in drill spindle receives a cylindrical projection on the screw, in which a race is turned; and a pin M, passing through the spindle tangential to the race, allows the screw to lift the spindle without affecting the rotation of the latter. In the best machines the feed screw is a hollow sleeve.

The table and supporting arm are similar to the last example, the lifting gear consisting of a handle N and worm P, worm-wheel Q, and rack pinion, the rotation of the last lifting or lowering the arm. The rack R is a sort of strut fitted between the top and bottom collars of the pillar, but otherwise loose. If the table be moved horizontally the rack is carried round the pillar, and remains in gear with the pinion in all positions.

Digitized by Google

PLATE VIII.

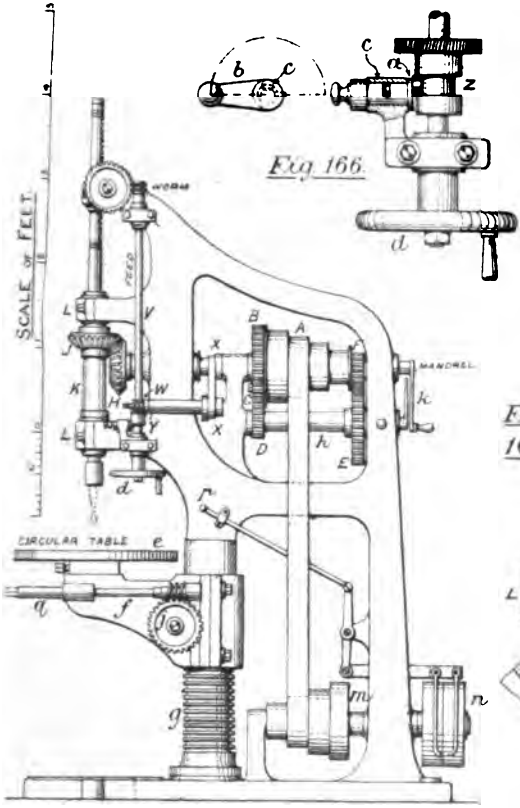

DOUBLE-GEARED DRILLING MACHINE.

(by Smith, Beacock & Tannett.)

Digitized by Google

Digitized by Google

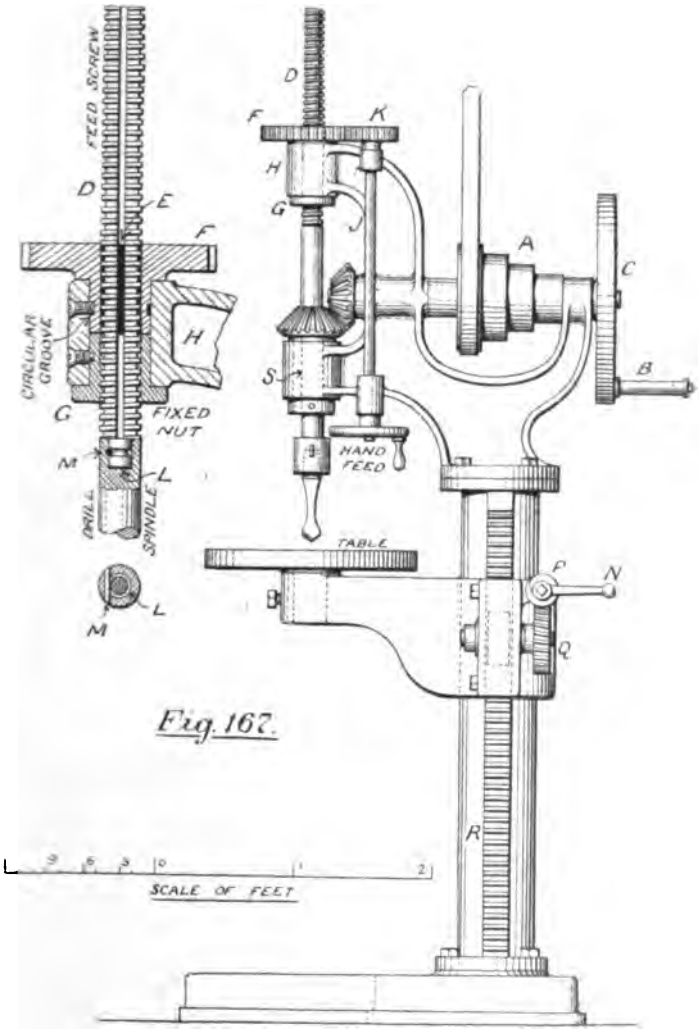

Fig. 167.

Single-geared Drilling Machine.

Digitized by Google

The Radial Drilling Machine is most useful for large work not readily moved, and has been, since first designed, much in request for holes in steam cylinders or boilers. The form of bed depends on the nature of the work, and is sometimes dispensed with, and a trolley run under the drill. Then the radial arm may be swung from a wall or roof stanchion. The machine in Fig. 168 has a stationary table, to the top or side of which the work is bolted; and the tool is adjusted over the work (1) by an angular movement of arm B; (2) a traverse of the saddle C; (3) a rise or fall of B. The last is obtained by turning the spokes E, which, through worm and wheel, rotate a pinion in rack F; and for the first both arm and pillar turn within the bed at X. The mandrel G is driven directly or by back gear, and mitre wheels H H transfer its motion to the spindle J, from which again the power is taken to the horizontal spindle L by mitre wheels K K. As arm B must rise or fall, K is supported by a bearing projecting through a slit in the hollow pillar D, and a feather key connects K and J.

The saddle C has bearings M M, and a sleeved mitre wheel N drives the drill spindle P. A bearing Q supports a short spindle, to which are keyed the mitre wheel R, spur wheel S, and cone pulley T, from the last of which various rates of feed are obtained as usual; and power is given from L to S by a pinion U, which, having a feather key, follows the saddle, so as to keep always in gear. (*See Appendix III.*)

The drill power passes therefore through five shafts, G, J, L, Q, and P, but this is not considered complicated in view of the advantages obtained. The saddle is moved along the arm by turning the hand wheel V, which rotates a small pinion, gearing into the rack W. (Further Drilling Machines in Chapter VII.)

Drills.—Some forms are shown at Fig. 169, where A is *flat-pointed* and fits in taper hole in the spindle, the cotter *a* preventing slip. The method of sharpening is seen at *b*, *c*, and *d*, and notches *e e* increase endurance of point. B is a *pin-drill*, where variation in diameter of circle cut is permitted by the movable cutter *f*, wedged in the slot *g*, a hole being first drilled in the work to receive pin *h*. Cutting angles have been previously discussed.

The *twist drill* C, no doubt the very best form for accurate work, is much in favour. A socket *i* fits the spindle, and takes

Digitized by Google

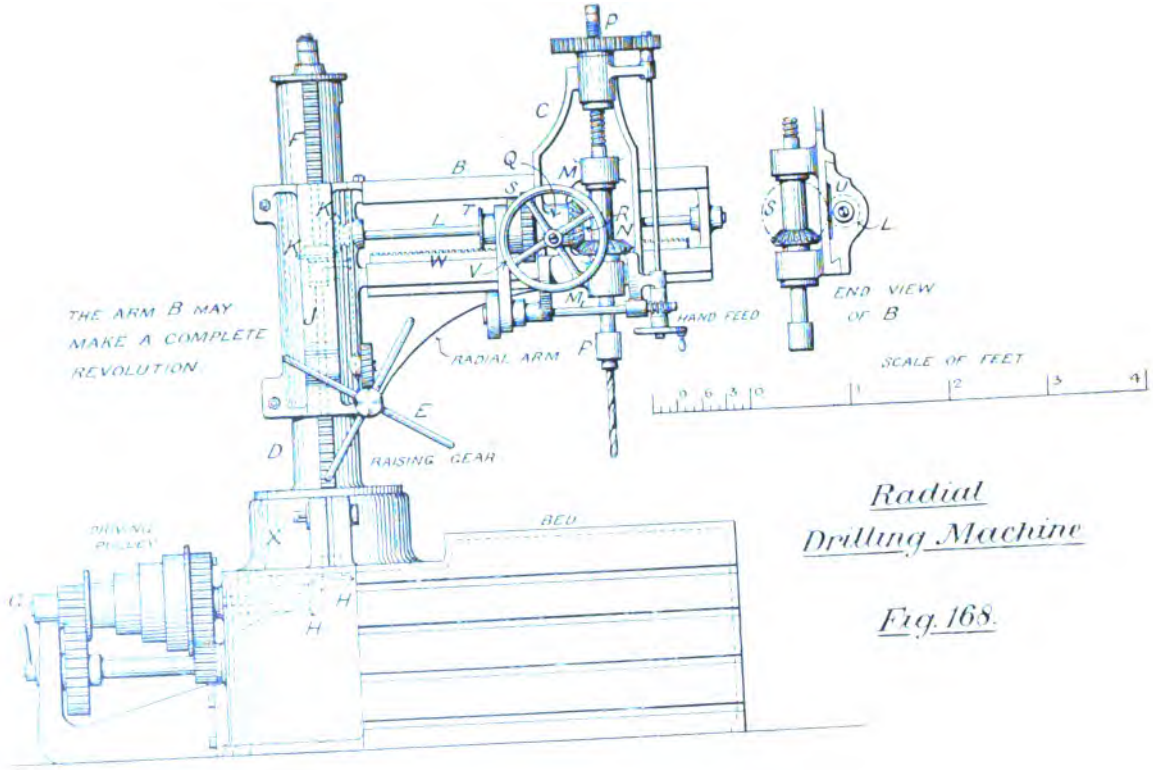

Radial Drilling Machine

Fig. 168.

Digitized by Google

the larger drills; a second socket *k* within the first is for medium drills; and a third, within *k*, fits the smaller sizes. These are carefully ground to fine taper, and are quite rigid.

The Slot-Drilling Machine (now metamorphosed into the vertical milling machine) has a saddle carrying the drill spindle

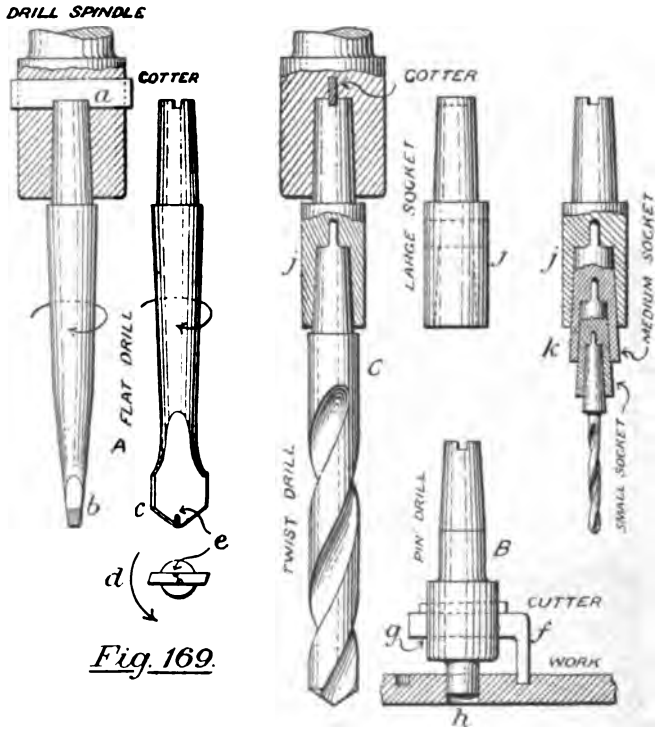

Fig. 169.

as in Fig. 168, but arm B is made immovable. While rotating, the spindle also receives a traverse along slide B, taken from a leading screw, lying within B, in addition to the shaft L. The drill thus cuts out a circle that travels along a straight line, known as a *slot*. Keyways and cotter holes are examples, and for such work vertical and horizontal feeds are required. (*See Appendix II.*)

Digitized by Google

The Planing Machine, as mentioned, is not strictly economical, because the tool cuts in one direction only, and the back stroke is wasted. To minimise this loss, and at the same time reverse the stroke without changing the continuous rotation of main shaft, ingenious motions called *quick returns* have been devised.

A large-sized planing machine is given in Plate IX., as made by Messrs. Hulse & Co. The table, stiffened with ribs, and having T grooves on its surface to receive clamping bolts, slides in V grooves B B, made true and level, being the copies. Thus the work travels, and the tool is fixed. The belt pulleys C, D, E are loose on their shaft, but C and E are technically 'fast' pulleys, because they drive the table, being fixed to pinions F and G. The strap being on pulley C, pinion F engages with wheel H; and pinion J on the axis of H gears with K; L in turn with M; lastly pinion N moves the rack P fastened to the table. A slow cutting advance is thus obtained. At the end of the stroke the strap is moved from C to E, and then K is driven directly from G, the rest being as before. Dispensing with one pair of wheels we have effected two objects—(1) a reversal of the stroke; (2) a quicker rotation of N, or *quick return* to the table.

When at rest the strap is on loose pulley D, and handle Q lies at right angles to the bed. Being connected to strap fork through levers R, S, U, inspection shows that Q moved to the right will give the advance, and a reverse movement the return stroke. But, once started, these motions are automatic, thus—Let the table be returning leftward in Fig. 171, back stop X will at end of stroke catch lever Y, and move it to the left, shifting the strap rapidly from E to C, the advance pulley. If the table travel to the right, stop Z catches Y and puts the quick return in action. These stops may be adjusted to give various lengths of stroke.

Two vertical standards *a a* bolted to the bed have slides on their front edges, and are stayed by tube *b*. A cross slide *c* lies across them, supported by vertical screws *d d*, passing through long nuts at the back. On the slide are two saddles *e e*, carrying other slides *f f*, to give a vertical movement to the tool. Screws *d d* are to adjust the cross slide to any desired height, after which it is clamped by screws *g g*. A handle may turn shaft *h*, which is

Digitized by Google

connected to the vertical screws *d d* by similar bevel wheels *j j*, and the beam is thus kept horizontal; but in our example three pulleys are used, *k* being fast, while *m m* are loose, and driven respectively by crossed and open strap. Moving the forks by the handle *l*, either strap is placed on fast pulley at will, and the cross slide raised or lowered by power.

When the work has cleared the tool on the advance, the stop *n*, having passed projection *r*, catches *q*, and moves it to the right. These projections are cast on bar *u u*, which is provided with teeth engaging with spur wheel *v*, and thus shaft *w* will rotate more or less according to the position of *n*. Mitre gear transmits this motion to shaft *x*, and from it to the feed motions, which may, by moving *n*, be varied from $\frac{1}{32}''$ to $1\frac{1}{2}''$ for each stroke. The wheel 10 is connected with ratchet wheel 14, but is loose on *x*, driving only through plate 11, which carries a pawl fitting in the ratchet teeth; the pawl may be withdrawn, and the feed motion suspended by turning the eccentric lever 13. On the return stroke the stop *p*, by catching *r*, will bring back bar *u* to its first position, without turning *x*.

The principal feed is that across the table. Screws 8 8 engage each with one of the saddles *e e*; and wheels 6 7, when slid to the right, connect through 4 and 5 with wheel 3 on shaft 2, which takes its motion from *x* by mitre gear *z*. A cross feed is thus given in one direction; but if 6 and 7 are moved to the left, and 3 with them, the direction of feed is reversed; and the intermediate position leaves 6 and 7 at rest.

A vertical feed is obtained when wheels 15 and 16 are in gear, motion being given to shaft 17, and from it by two pairs of mitre gear and horizontal spindle to the screws 18 (these screws serve also for fine adjustment of tool). The bolts 19 fit in a circular T groove formed in the saddle, and thus allow an angular clamping of front slides 20, when the last-mentioned feed becomes angular. Using suitable wheels, one tool may be fed horizontally, and the other vertically or at an angle.

The tool box may also be fixed at a small angle, limited by the slot 21; and the front or flap is so hinged at 22 that it may lift during the return stroke and avoid useless wear of tool, an automatic motion being sometimes provided for relieving the

Digitized by Google

PLATE IX.

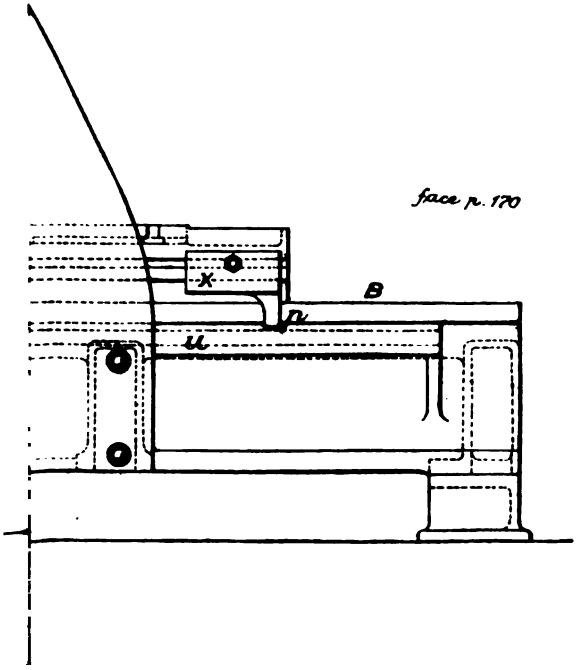

Digitized by Google

Digitized by Google

tool altogether. Special clamps 23 hold the tool, having large square holes to receive it, and the turning of the set screw serves both to fix tool to clamp and clamp in tool box.

The tool itself is shaped as in Fig. 172, being so bent back as to place the point nearly in a line with the hinge and prevent 'digging.'

The Shaping Machine is a planer with moving tool and fixed work, having on this account some advantage for small articles; for if a moving table be employed, its stroke must exceed the length of work, so as to leave space for the acquisition of velocity in such a heavy mass; while the moving parts in the shaping machine, being much lighter, enable us to adjust the stroke with nicety, besides absorbing less work by friction.

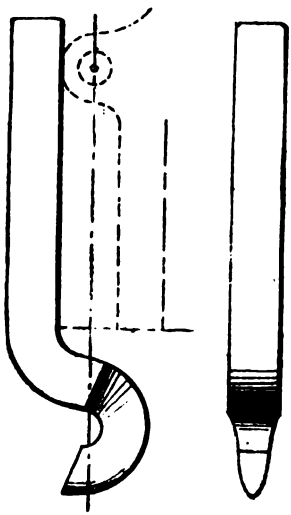

Planing Tool.

Fig. 172.

The machine in Plate X. is by Messrs. Smith & Coventry. The tool box A is fixed to a 'ram' B, the sliding of which in saddle C gives the cut. The saddle moves along the bed D to give the feed, and an arm E, cast upon it, supports a rocking lever F, which actuates the ram through the rod H. The cone pulley rotates right-handed, carrying on its shaft (which extends the whole length of bed) a pinion K, giving wheel L a left-handed rotation. L turns on a stud fixed to the arm E, and carries a crank pin P, whose throw may be adjusted similarly to that in Plate XI. A die on this pin slides in a slot M, formed in the oscillating lever F. Referring to Fig. 174*b*, the *uniform* rotation of L will give the ram a slow advance when travelling from *a* to *b*, and a quick return from *b* to *a*, because *ab* is a longer path than *ba*, as shown by the arrows; the proportion being 23 to 14

Digitized by Google

in the example. The pinion K can slide on shaft Z, and so keeps always in gear with L, being driven by a feather key. Length of stroke is adjusted by the position of P, but *position* of ram is given by adjustment of the nut Q.

The table R, supporting the work (which is bolted to top or side as found convenient), may be adjusted for height by the handle S, which, by mitre gear T, rotates the screw within the nut U, fixed to the bracket V. The horizontal position of the work may be varied by moving V along the bed to the point required.

W is a mandrel upon which hollow cylindrical work may be placed by removing the loose collar X, and gripping the work between the cones. The bracket Y steadies the end of the mandrel.

Three feeds are required, each of which may be worked by hand if desired. The pinion 4 (Fig. 174*a*) drives wheel *g*, carried on a stud *e*. An adjustable crank pin on *g* is connected to the lever *h*, which gives, through ratchet *d*, an intermittent rotation to the spindle *j*. Upon this spindle is a worm gearing into a worm wheel on the mandrel W, and thus a rotary feed is conveyed to the mandrel. The latter may be used for such articles as lever bosses, which are interrupted on one side by the lever arm, and therefore unsuitable for lathe work. The second feed is a horizontal motion of the saddle for work fixed on the table. A crank pin *k*, on the wheel L, is connected to the ratchet *m*, and the motion transmitted by *n* to the wheel *p*. *p* forms a nut attached to the saddle, and as the screw *q* is fixed to the bed, it is evident that a rotation of *p* will advance the saddle along the screw.

The third feed is vertical. *r* is a bracket fixed to the saddle, and *s* a rod sliding in *r*, as well as in brackets *t t* carried on the ram. At each back stroke of the latter the tappet *w*, on rod *s*, is caught by the bracket *r*, and *s* is moved to the left, causing the ratchet gear *x* to turn the screw *y*, and give a small vertical advance to the tool box. When the ram reaches the end of the advance stroke the tappet *z* in turn catches *r*, moving *s* back to its original position. The head A can be fixed at an angle to the vertical by unclamping bolts 2 2, and refixing, when the last-mentioned feed becomes angular; and the position of the tappets may also be varied.

In addition to the above, a fourth movement, enabling us to fix the tool box at an angle while preserving the vertical feed, is

Digitized by Google

Digitized by Google

PLATE X.

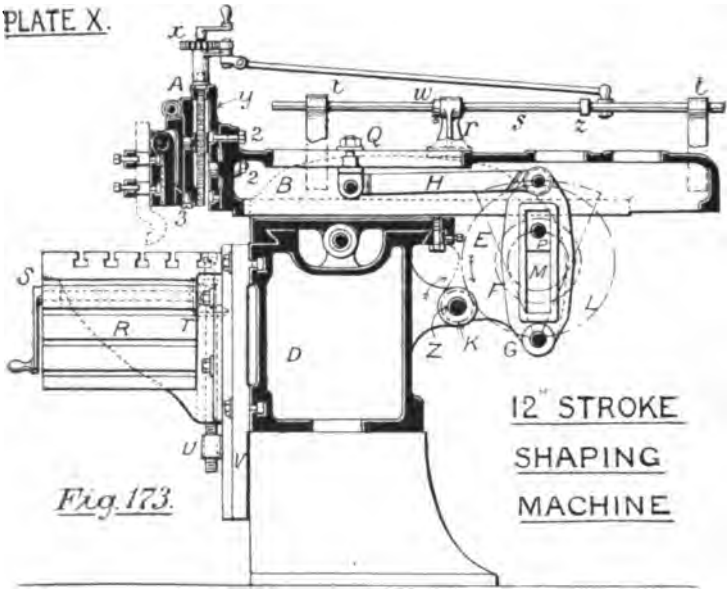

12" STROKE SHAPING MACHINE

Fig. 173.

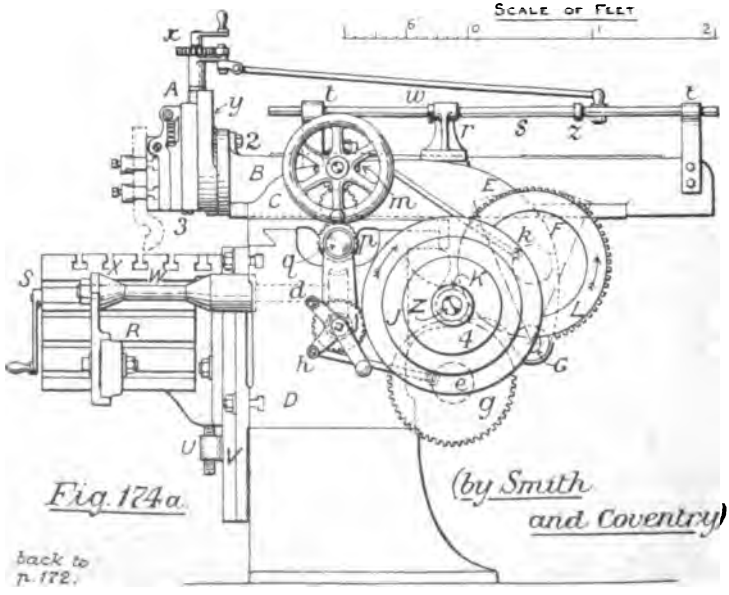

Fig. 174a.

(by Smith and Coventry)

back to p. 172.

Digitized by Google

PLATE X.

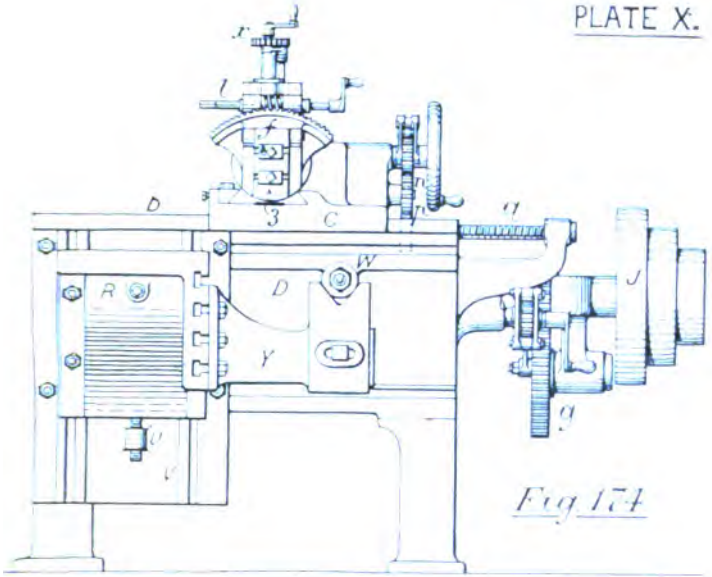

Fig 174

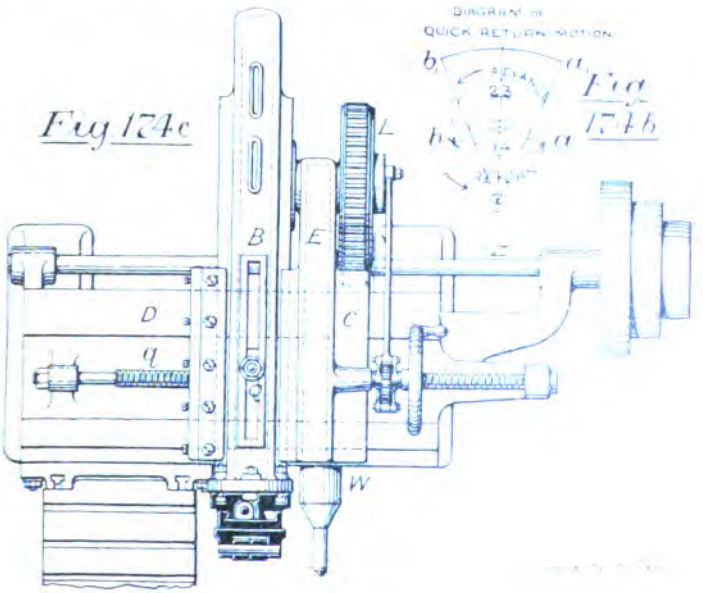

Fig 174c

Fig 174b

Digitized by Google

Digitized by Google

obtained by means of the worm spindle *l*, provided with a handle, and worm gearing into the segment *f*, which is pivoted at 3. We may thus shape a corner or give a feed (by hand) for a concave surface. The front of tool box is provided with the usual flap to relieve the tool during the return stroke, and the tool itself takes the same shape as that described for the planing machine.

The Slotting Machine is probably the least economical of machine tools. While the planing machine takes simple horizontal cuts, and the shaping machine tools cylindrical work lying horizontally, the slotting machine is for the production of *vertical* cylindrical and plane services. Though working at a disadvantage in having to lift a heavy ram, this machine has served a purpose, and is still used to a large extent. Smaller work can generally be accommodated in a shaping machine, but the slotting machine is used for heavier work, and is made more powerful.

Plate XI. represents one of these machines, as made by Sir J. Whitworth & Co. Power being given to the cone A, it may be passed directly to the mandrel B, or through the back gear at C, the back shaft being moved to the left or right, or (Fig. 175) to put the wheels in or out of gear respectively. The power is further taken from the mandrel to the ram through the medium of a quick return motion. Looking at the front of the ram, and keeping our attention on both views, the spur wheel E is driven by the pinion F, and the motion transmitted to the crank disc G by pin H. The spur wheel turns on the boss J, and the crank disc in K, their centres being 1½ inches apart horizontally. Referring to Fig. 177, if the spur wheel rotate uniformly it will pass through 10 divisions while bringing the pin from H to H_1, but through only 7 divisions from H_1 to H, and the advance will bear the proportion of 10 to the return 7. As some sliding takes place between pin H and disc G, a die is provided. The rod L connects the crank disc with the ram M, and there are two adjustments; one at N to fix the height of the ram; the other at P, where the rotation of two screws is made to move the pin and regulate the throw of the crank. A brake block Q, bearing on the crank disc, may be tightened by screwing up the wedge R, and serves to fix the ram in positions where it might fall on account of its weight.

There are three feed motions, all taken from cam S, the

Digitized by Google

Figs. 175 and 178, which is connected by a shaft with the disc G. At every rotation of the cam a vibration is given to the lever T, which is connected to the lever U (Fig. 179), carrying a ratchet pawl, and a partial rotation of shaft V (Fig. 175) thus obtained. Both levers are provided with slots to adjust the amount of feed.

The table W to support the work, is circular in form, and has worm teeth on its lower rim. It is mounted on two slides X and Y, which are again supported on the bed slide Z. The shaft V turns the bed screw *g* through the wheels *e* and *f*, giving a longitudinal feed, useful for cotter holes and such like. Putting *f* out of gear by sliding, a cross feed is effected by wheels *a* and *d*, the former taking its motion from V by mitre gear, and the latter being fixed on the cross slide screw *h*, so that Y would be stationary and X would traverse. The third feed is a rotation of the table obtained by the worm gearing above mentioned; the wheel *d* being slid out of gear, and *b* put in, the worm shaft *j* is rotated, and its motion transmitted to wheel *k*, cast on the table. This motion is analogous to that of the shaping machine mandrel.

It has been customary to attach the tool directly to the ram, and let the point scrape on the work during its return, giving useless friction and wear, but it is now recognised that a flap is advisable, and such a tool box has been shown. A spring on the front or counter-balance at the back is necessary to bring the tool back to its work, gravity not being otherwise employable.

The form of tool may be as for previous machines.

The Milling Machine, though in its present form of recent introduction, has been known for a very long period; but it was not till milling cutters or 'mills' were produced more cheaply and correctly by emery grinders that the principle could be sufficiently extended.

Cutter.—As already mentioned, a rotating cutter is employed to which the work is fed, and this we shall first discuss. Fig. 181 represents a spiral mill for tooling flat surfaces. All these mills are keyed to a mandrel or cutter spindle, which is either rotated between centres, or fixed into the catch plate and only centred at its opposite end. Fig. 182 shows a key-seating or grooving cutter for cutting key ways or as a parting tool. Being ground both on circumference and sides, it becomes narrower at each re-grinding, and therefore inaccurate. This can be avoided by

Digitized by Google

PLATE XI.

OTTING MACHINE.

Joseph Whitworth & Cº)

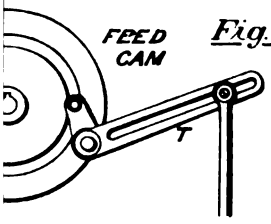

Fig. 178.

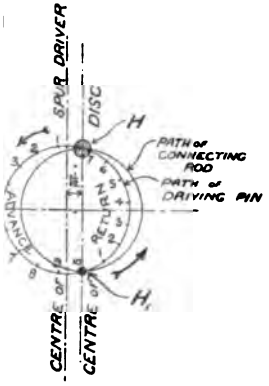

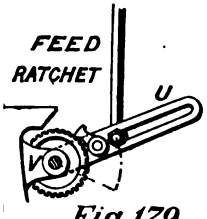

Fig. 179.

Fig. 180.

PLAN OF SLIDES.

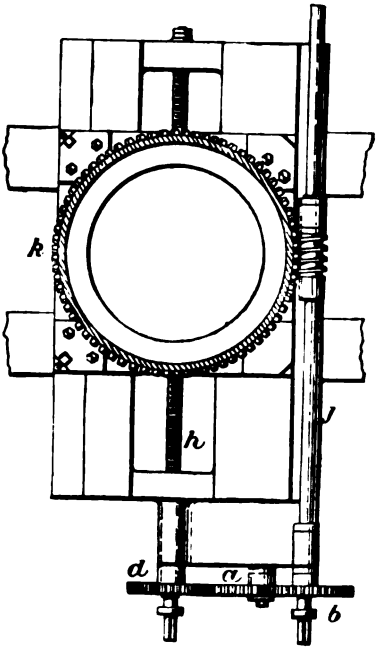

face p. 174

Digitized by Google

Digitized by Google

the use of the expansible cutter in Fig. 183, which is divided at *a b* by a plane slightly inclined to that of the cutter, and has thin discs inserted to preserve the normal width. If *a b* were at right angles to the axis a strip of uncut material would be left on the work, which is here obviated, besides which, various widths of grooves may be cut. Further, if required, two mills may be placed on one spindle, the teeth being interlocked, and a groove of about twice the former width thereby cut, but it is important that the mills be of exactly the same diameter, obtained by grinding them together on the same spindle. Fig. 184 shows a pair of heading or twin mills for forming the sides of hexagon nuts or other parallel work, the width being varied by the insertion of suitable packing. In Fig. 185, A is a mill for grooving a screw tap, B for fluting a rimer, and C an angular mill for cutting the teeth of other mills. (*See Appendix II.*)

When a grooving mill is allowed to cut on its side only, say, when fixed in a vertical machine, it is termed a face cutter, but such an application is not desirable.

The steel or 'blank' to form the cutter is turned to correct diameter while soft, and the teeth then cut. It is next tempered to a straw colour, and the edges are finished by grinding with a small emery wheel of the same shape as the mill C, Fig. 185. Great care must be taken to avoid cracking while hardening, but distortion is now removed by grinding the *hardened* mill.

Fig. 186 represents a cutter for forming the teeth of spur wheels by removing the interspaces. *a* is the relief angle or bottom rake, a side rake being provided by cutting the profile in an arc eccentric to that of the point path when rotating. Thus *b* is the centre for formation of the cutting tooth surface, while *c* is the centre of rotation. Now *d d* and *e e* are curves struck from *b*, and sections on each of these lines would be rectangular, but a section on *d e* must take the shape shown at *f*, because $d_1 d$ is greater than $e_1 e$ as seen in the end view. But as *d e* is the path of the point *d* during the revolution of the cutter, clearance or relief angle is therefore given at the side, and the cutter is said to be 'backed-off.' Of course this method can only be used with cutters of tapering profile; it enables us to preserve both form and width of cutting tool, however much is removed from the face, and is an improvement on the old cutter, which became

Digitized by Google

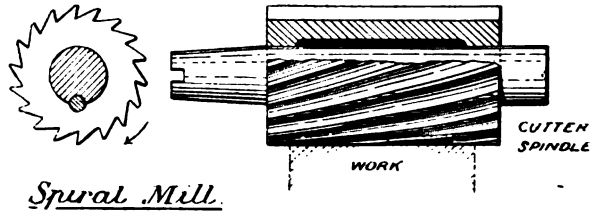

Spiral Mill.
Fig. 181.

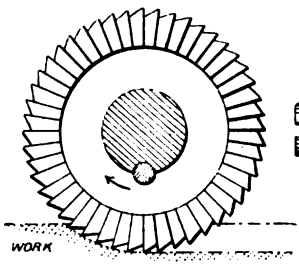

Grooving Mill.

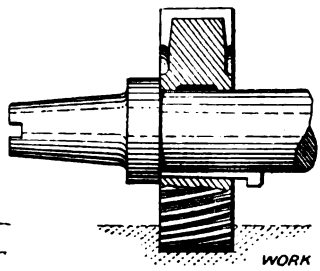

Fig. 182.

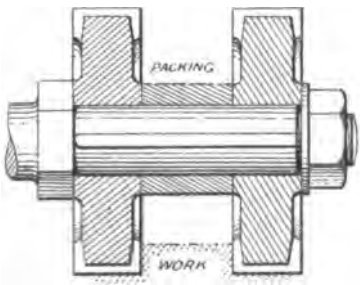

Twin Mills.
Fig. 184.

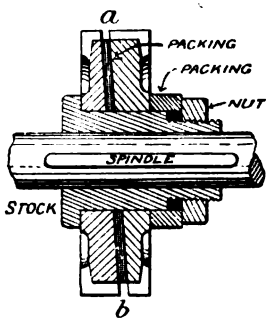

Expansible Mill.
Fig. 183.

Digitized by Google

narrower on re-grinding. The space between the teeth is to admit an emery wheel for grinding the faces.

Angle of tooth, although important, is still rather in dispute, principally because the same cutter, to avoid expense, is being used for various materials—a wrong procedure, without doubt. Probably some variation on the angles already given is necessary because of the higher speed of cut. Experience seems to suggest the following:—

Cutting angle	80° to tangent.
Angle of relief.....	10° to tangent.
Front rake	10° to radius.

giving a tool angle of 70°. Small mills are made with radial teeth, corresponding to a cutting angle of 90°. A side rake of 10° should be given, and the teeth cut spirally or obliquely on a finishing tool.

Speeds.—There is still more variation in practice regarding these. They can be considerably higher than for other tools, because each tooth is in contact for only a small portion of the revolution, and has ample time to cool. The result is the more highly finished work that has brought milling into favour. The following speeds give the result of experience, and are fairly correct:—

Milling Speeds in feet per minute; and revolutions per minute, in terms of radius (r)" of cutter.

	Roughing Cut.		Finishing Cut.	
	Ft. per M.	Rev. per M.	Ft. per M.	Rev. per M.
For Steel	30	$\frac{57}{r}$	40	$\frac{76}{r}$
„ Wrought Iron	40	$\frac{96}{r}$	55	$\frac{105}{r}$
„ Cast Iron	60	$\frac{114}{r}$	75	$\frac{143}{r}$
„ Gun Metal	80	$\frac{152}{r}$	100	$\frac{190}{r}$
„ Brass	100	$\frac{190}{r}$	120	$\frac{228}{r}$

Digitized by Google

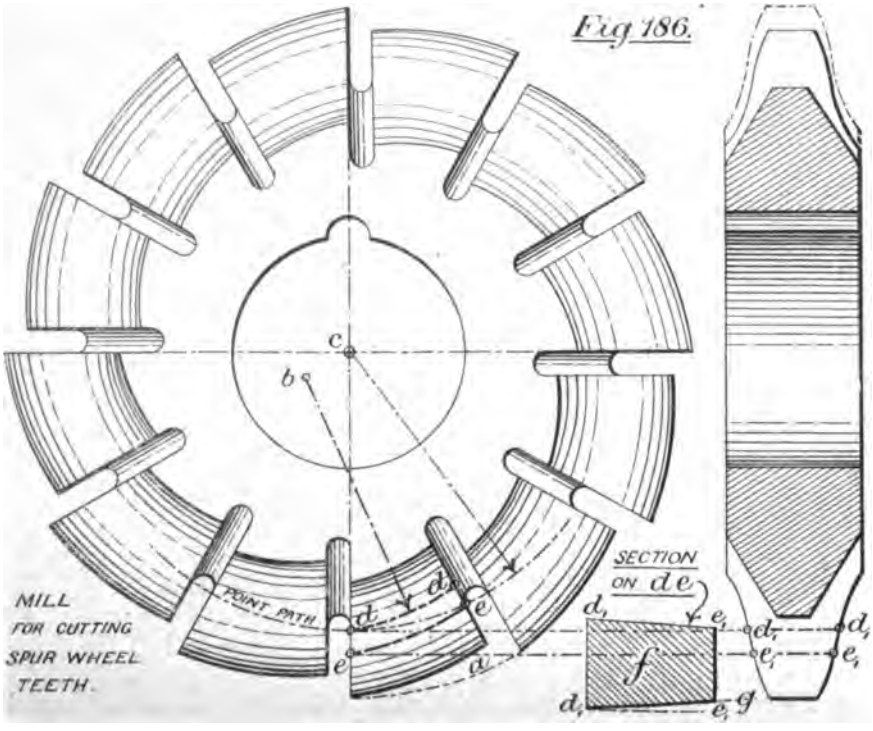

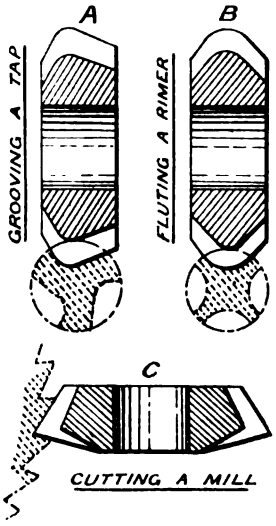

Fig. 185.

Digitized by Google

The *Universal Milling Machine* was of American design in the first place, and one of these useful machines is shown in Plate XII., as made by Messrs. Tangye.

The mandrel A is driven from the cone pulley B, either directly or through the back gear, the latter being thrown out by the handle C, which turns eccentric bushes as usual. The mandrel is of large diameter, for stiffness, and revolves in coned bearings D D, the thrust when using a face cutter being taken by the steel tail pin E. A strong overhanging bracket F carries a small head H and centre G, to support an edge cutter, which centre is roughly adjusted by unbolting H, and finely by unscrewing the check nuts. The bracket is usually made round, and that form has some advantages, but is not so steady. The mill is either supported between centres, and driven from the catch plate; or has a shank similar to that described for the drill sockets at Fig. 169, when it is further steadied by the outer centre G; the latter is the more common method. A twin mill is shown in position. Sometimes tools are fixed in the holes shown in the catch plate at J, which is thus transformed into a face cutter, but the points must all be placed in the same vertical plane, so that each may take its proper share of work.

A vertical slide K, having square edges for rigidity under heavy cuts, supports a knee bracket L, which carries the table M, and between L and M are two slides N and P, the first for longitudinal, and the second for cross traversing. These swivel on the circular table Q, formed by their common surfaces, and P is made of extra length in plan to steady the table, a detail often neglected. A special point is the improved means of traversing the table. This is often effected by telescopic shafts with universal joints connected to the *end* of the table, and these sometimes act at such bad angles that the joints in crossing centres cause a slight dwell, which is reproduced on the work. This is avoided in the machine illustrated. A small cone pulley R on the mandrel drives the lower pulley S, keyed to the worm shaft T. This shaft carries a worm, gearing into a worm wheel *g*. A telescopic shaft U is connected to the inside of the worm wheel by a universal joint, and to the mitre wheels V W by a corresponding joint; these convey the motion to the screw X, which gives a cross feed to the

Digitized by Google

table. They are fixed in the centre of the swivelling table, and will transmit the feed motion with steadiness, even when the table is swivelled up to 45°, say for cutting spiral mills, twist drills, &c. By moving the hand lever Y the mitre wheel W may be drawn out of gear, and the cross feed given by hand, if desired, a catch Z ensuring the contact of the wheels when in gear. The longitudinal feed from screw *a* is rather a setting motion, there being few cases where other than a cross feed is desired.

The handle *b* is to raise or lower the table, which it does by turning the screw *e* through the medium of the worm gear *d*.

Other forms of machine are Vertical Milling Machines and Profiling Machines. In the former the cutter spindle is vertical, and a circular feed, as well as traverse, is given to the table. The latter is a smaller tool, where a vertical mill is traversed by a hand lever so as to accommodate itself to intricate forms. Good lubrication is necessary for all mills, and should be supplied under pressure from a small pump.

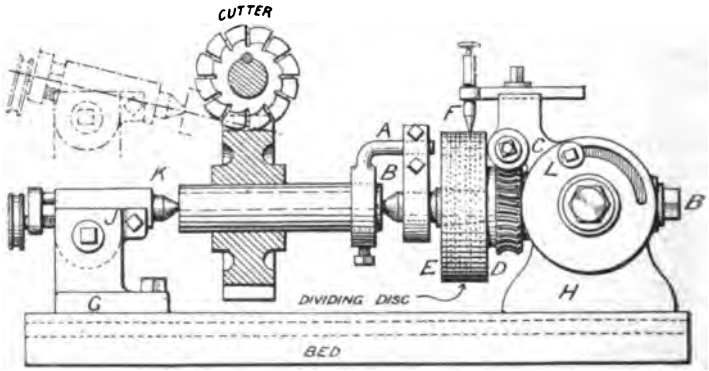

Dividing Headstocks.
Fig. 189.

Dividing Head.—When milling teeth of wheels, cutters, rimers, &c., the work is supported in centres shown in Fig. 189, which are fastened to a small bed and bolted to the machine table. The wheel to be cut is fixed on a mandrel, and held in position

Digitized by Google

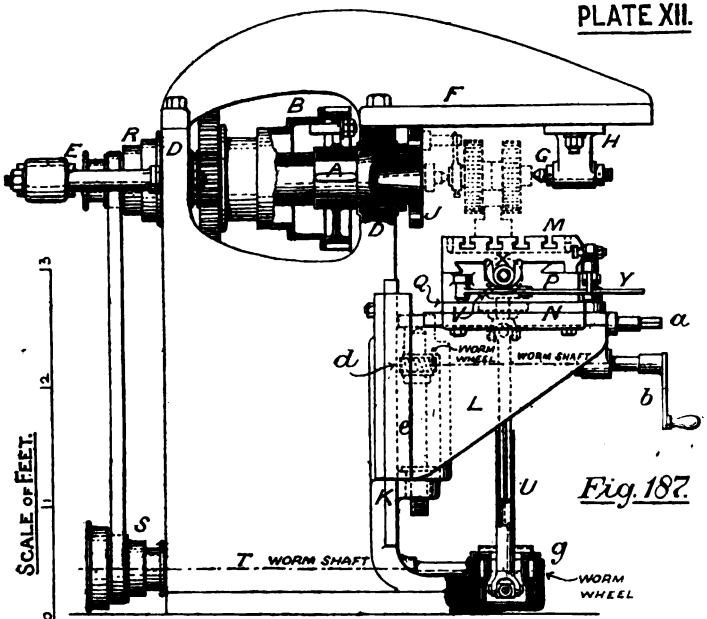

Fig. 187.

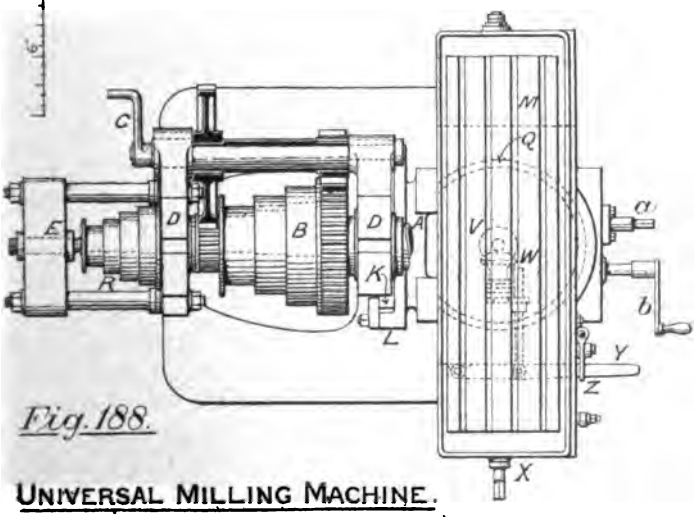

Fig. 188.

UNIVERSAL MILLING MACHINE.

(by Tangye's Machine Tool Co)

face p. 180.

Digitized by Google

Digitized by Google

by the carrier A, which is screwed on the right hand centre, fixed in spindle B B. The spindle B B may be turned through any desired angle by the worm C and wheel D. E is a steel drum provided with small holes, representing various exact divisions of its circumference, and the point F can enter any of these, so as to set the spindle in the desired position. Knowing the number of spaces in the wheel to be cut, or flutes to the rimer, drum E, called a dividing plate, can be placed in each position in turn, and a cut taken. The heads G and H can be either bolted directly to the table, or packed to any convenient height, to accommodate a larger piece of work; or H may be bolted to the

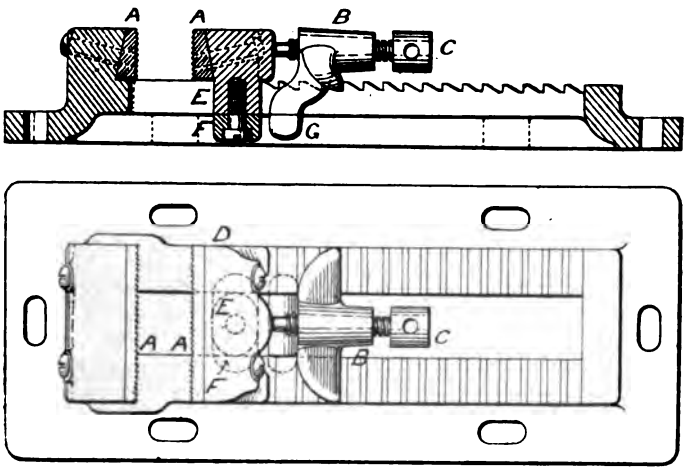

Fig. 190. Taylor's Machine Vice.

table, G packed, and the centres placed at an angle, as shown by dotted lines, useful for tapered work. This is obtained by releasing the screws J and L, when centre K may dip, and B be tilted between the cheeks of H. B may be further turned at any angle up to the vertical, for milling cutters of various angles, and E has a conical socket to hold the mandrel supporting the work.

Similar centres are used when milling spiral cutters or twist

Digitized by Google

drills, but then the spindle must be rotated gradually, by change wheels connected with the feed.

The Machine Vice is a very useful appliance for Shaping, Milling, and Drilling machines. It is shown at Fig. 190, and is bolted to the table of the machine, its object being the holding of work too small to be fastened down directly, or to facilitate the setting and re-setting of such work. A great desideratum is that the latter should bed firmly on the surface of the vice, accomplished in the example by the bevelled jaw plates A A, which pull the work down at the same time as it is gripped, by sliding on the bevelled surface. The nut B can be rapidly changed to any notch, and fine adjustment be given by applying a tommy to the screw C. The jaw D has a cylindrical shank and plate F; it can therefore be set at any horizontal angle, and the screw C will still bear upon it normally. B is also provided with lips at G, to resist upward pull.

Digitized by Google

CHAPTER VI.

MARKING-OFF, MACHINING, FITTING, AND ERECTING.

WHEN an engine or machine is first projected, a rough 'general' drawing is made by the draughtsman, in order to determine the relation of the several parts; after which the 'detailing' takes place, which consists in drawing out each piece separately to a large scale, and at the same time classifying the work—putting all the forgings upon one set of sheets, and the castings upon others—so as to facilitate the distribution of the parts to the various shops and avoid delay.

Detail Drawings are fully provided with dimensions, and have red lines drawn round surfaces that need Fitting or Machining, viz., such as are required to fit or work together; and the Pattern Maker and Smith are thus enabled to decide where to leave extra material. It is the business of the *Marker-off* to 'line out' the rough work received from the above men; that is, indicate by a boundary line the amount of material to be removed by the *Fitter* or *Machinist*. The work is then finished and passed on to the *Erector*, who carefully puts it together to form the completed machine.

The Marker-off's Tools.—A large **plane table** or *Surface plate* is first required. This is shown in Fig. 191, and its size varies with the average work to be lined-out upon it—from 4 ft. by 2 ft. up to 12 ft. by 4 ft. It is well ribbed underneath to prevent any possible distortion, and is planed very truly, being better also if filed up and a little scraping done upon it. The edges should be planed truly and adjacently at right angles, so that squares may be applied to them when necessary. Lastly, the feet should stand upon a firm bed of concrete, and be adjusted until the surface of the table is truly level, which often assists the marking-off considerably.

V blocks, to support cylindrical work upon the table, are

Digitized by Google

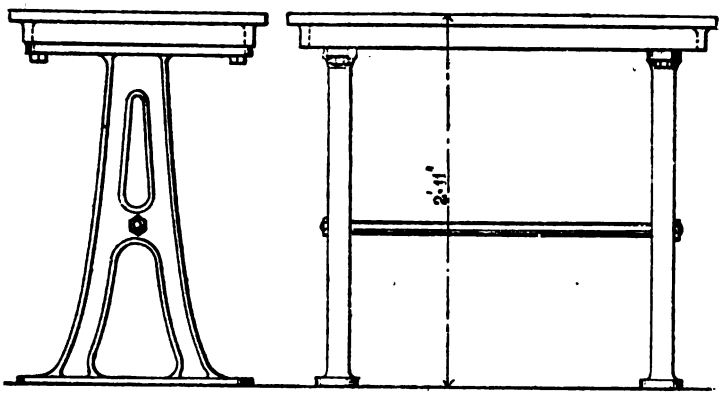

Fig. 191.
Marking-off Table.

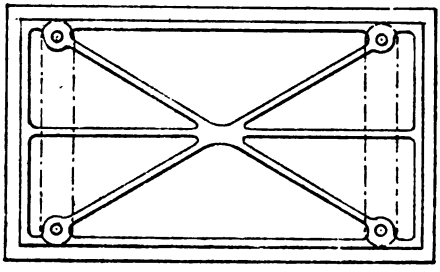

underneath view

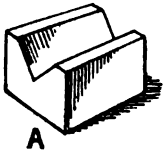

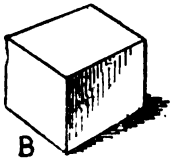

Fig. 192.
Blocks.

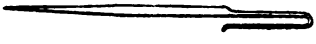

Fig. 194.
Scriber.

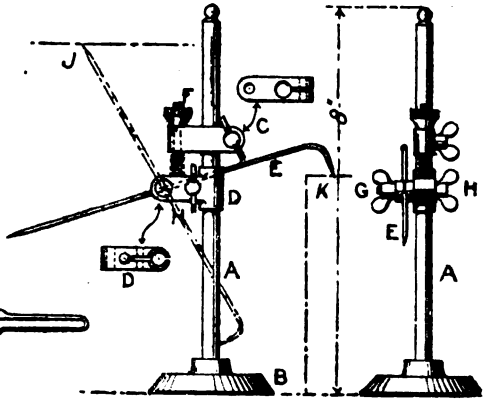

Fig. 193. Scribing Block

Digitized by Google

shown at A, Fig. 192; and **Cubical blocks** are also provided, of several sizes, but each of known depth and so figured. They have their surfaces truly parallel, and are used to gain greater height for the Scribing block, as well as for the purpose of packing up the work (*see* B, Fig. 192).

The **Scribing Block,** Fig. 193, is a most important tool. It consists of an upright pillar A, fixed in a base B, which has been truly scraped underneath. Upon A slides the head D, which can be set to any height by tightening the nut H, a pointer or scriber E being at the same time fixed at any convenient angle by nut G. Most scribing blocks have no other adjustment, but in that shown there is a screw at F for further accuracy; here the head C is first clamped, and D left free until finally adjusted by the screw F, after which D is firmly tightened and the scribing done. The scriber has one point straight and the other curved, the uses of these being shown, where J can be made to 'scribe' a horizontal line on the work by moving the block along the table, and H may serve to 'feel' the height of certain other work. The scriber is of steel, well-hardened, and must be kept sharp by rubbing on an oilstone.

The **Hand Scriber** (Fig. 194) is to the marker-off what the pencil is to the draughtsman. It is pointed at one end, and hooked at the other for hanging to the pocket.

Compasses and **Trammels** must be provided for striking arcs of various radii, and as some pressure is required to make a sufficiently clear line on the work, both these tools should be sufficiently rigid; the former being supplied, for this purpose, with an arc and screw. Both tools are shown at Fig. 195.

Accurate measuring **Rules,** with inches divided into eighths and tenths; **Squares** large and small (3 in. to 3 ft.); **Straight Edges** of different lengths; and **Callipers,** both for internal and external measurement, are all necessary tools; while if the work is too large to mark-off on a table it should be levelled, and all lines be drawn by reference to an ideal horizontal or vertical plane, necessitating the use of either a *Spirit Level* or the **Square and Plumb-Bob** shown at Fig. 196, the latter being the only tool in favour with the best workmen, as levels are known to get out of order so easily.

Digitized by Google

Of **Centre Punches** two are required, the larger for marking main centres only, and the smaller, or *Dotting Punch*, for the purpose of making a scribed line more lasting and apparent, by marking a series of punches or 'dots' along its length.

A light crane arm and Weston block is also of use when work of large size is to be manipulated.

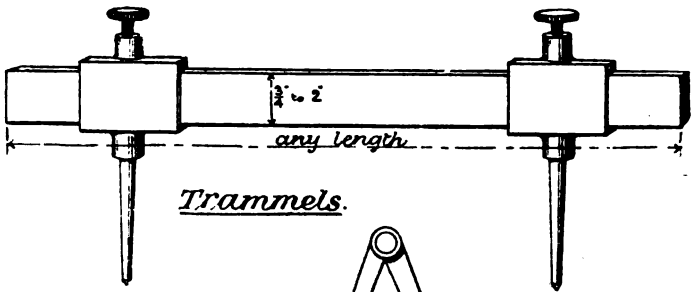

Trammels.

Fig. 195.

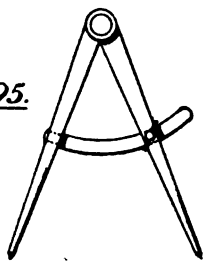

Compasses.

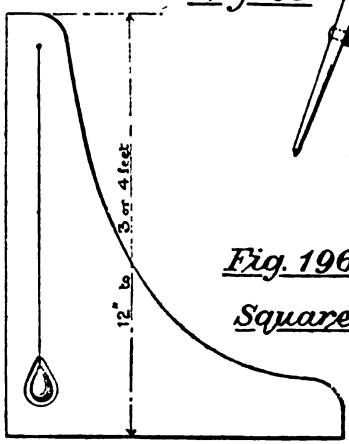

Fig. 196.

Square with Plumb-Bob.

Fitter's Tools.—Most fitting is done at the bench, the work being gripped in a vice, of which there are two principal kinds, 'Leg' and 'Parallel.' The old-fashioned **Leg Vice,** made of wrought iron with steel-faced jaws, is still considerably used, because capable of withstanding a large amount of hard

Digitized by Google

usage caused by heavy chipping, &c. It is shown at Fig. 197, and is fastened to the bench by coach screws at A, while the leg B serves as a steadiment. Although the pin C is a long way down, the jaw faces are very far from parallel when the vice is opened to its widest, and then wedges must be inserted to secure an even grip. To avoid this difficulty the **Parallel Vice** was introduced, and is now extensively used. It may have either a simple screw arrangement for gripping, as in the leg vice, or may have some method of rapid adjustment or *instantaneous grip*. The example in Fig. 198 is of the latter class, and instead of a screw there is a set of levers forming a toggle joint. Referring to the diagram, A_1 A are the toggle bars, A_1 being pivoted against the casing C, and A against the toothed bar B, which is capable of engaging with the teeth in the sliding bar E. The bars are further held together loosely by the spring D. In order to grip a piece of work, the handle is first thrown back as in the figure, and the bar E, being free, is pushed *nearly* up to the article. The handle G is next pulled towards the operator. When it reaches the position H, the bar A_1 is released, and the spring D brings the teeth at B and E into contact. Then, as the handle is pulled further forward, the eccentric boss J acts on the back of the lever A_1, and, nearly straightening the toggle, forces the bar E forward with great force.

The proper height to place the vice is an important consideration, and depends on the class of work for which it is to be used. If this be light, the jaws should be rather higher than the elbow, to bring the work nearer the eye; but if the work be heavy, the fitter needs to put his whole weight on the file, and the jaws are then placed rather lower than the elbow. A good average is 42 ins. to the top of the jaws, which requires a bench 2 ft. 9 ins. high. The **Hand Hammer** has a head of about 2 to 2½ lbs. weight (the latter only for very heavy chipping), and a shaft from 12 to 15 ins. long. It is shown at Fig. 199. The 'face' is flat, but the 'pane' is usually spherical, for riveting purposes.

The Fitter's chisel, called 'cold,' or 'chipping,' has three varieties:—The **Cross-cut Chisel**, Fig. 200, is for roughing out work for the flat chisel to follow upon. When in use A is

Digitized by Google

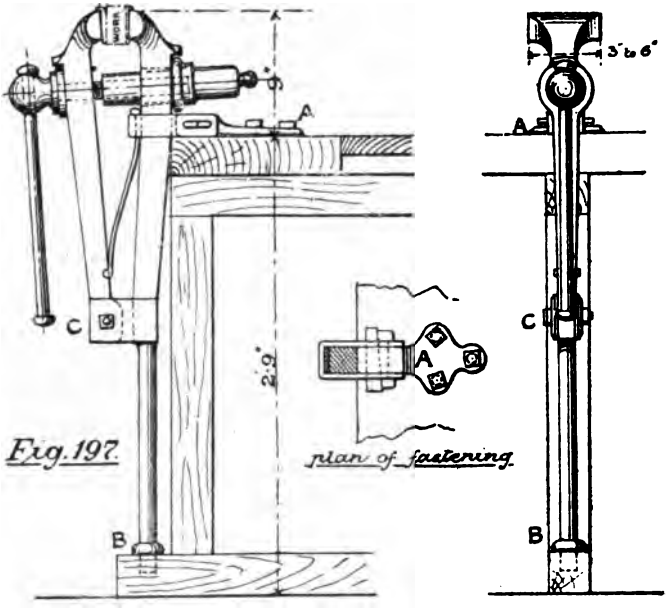

Fig. 197.

Leg Vice.

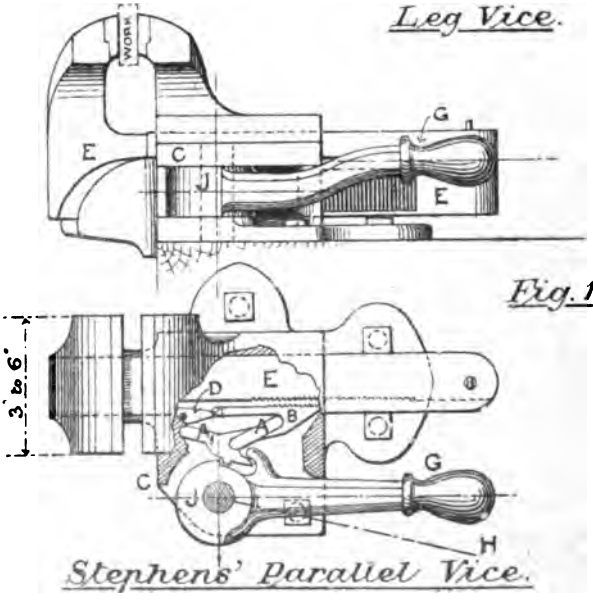

Fig. 198.

Stephens' Parallel Vice.

Digitized by Google

the elevation, and B the plan view. The **Flat Chisel**, Fig. 201, is used to true up surfaces previous to filing; and the **Round-nosed Chisel**, Fig. 202, is for chipping out concave flutings; but the last is more of a machinist's than a fitter's tool, the lathe-man and driller both using it for 'drawing' a centre-punch mark or countersink, which has been begun untruly, by chipping a little to one side of the depression so as to alter the position of the centre, after which the drill or square-centre is again applied.

The point of a flat chisel is ground symmetrically on each side, and should enclose an angle about equal to that of the **V** screw-thread, viz., 55°, though a slightly smaller angle may be used in finishing. After chipping, the surface must be further trued by filing.

Files may be classified in two ways: (1) by the *contour*, both in length and in section; (2) by the kind of cut and degree of fineness. The length must also be stated, measured along the edge, not including the tang. The cut may be double or single, the latter being also called 'float' cut, but as this is principally used for saw files, it will not be considered further. Longitudinally, files may be *parallel* or blunt, and *taper* or pointed; and in cross section they may be *flat*, *three square* or triangular, *half-round*, *round*, and *square*. The fineness of cut is represented by the terms *rough*, *middle*, *bastard*, *second-cut*, smooth, and *dead-smooth*, the last four only being required by the Fitter. *Safe-edge* files are those left uncut on one narrow edge, to serve in filing a surface near a corner, without destroying the truth of that at right angles to it. Files are either machine or hand cut, of which the latter are most in favour. It will be seen therefore, from the previous information, that a particular file may be described something as follows:—'12 in. hand, taper, flat, bastard, double-cut, safe-edge file.' As the teeth only cut in one direction the file is analogous to a planing tool.

Scrapers still further true up a surface left by the file or machine tool. They are made from old files, by grinding off the teeth and sharpening the edges, and have three principal shapes as shown in Fig. 203: *Half-round* (A), useful in scraping a bearing; *three-square* (B), sharpened on the long edge for truing up

Digitized by Google

Fig. 199.
Hand Hammer.

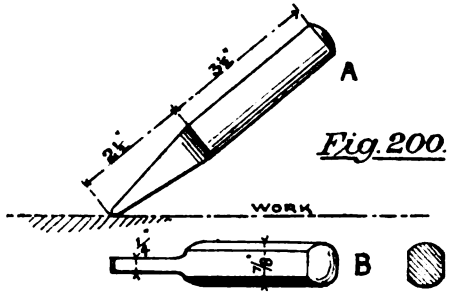

Fig. 200.
Cross-cut Chisel.

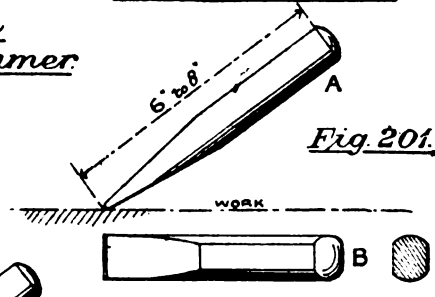

Fig. 201.
Flat Chisel.

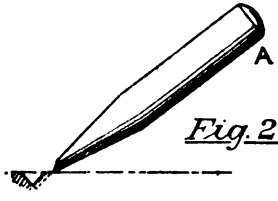

Fig. 202.
Round-nosed Chisel

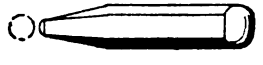

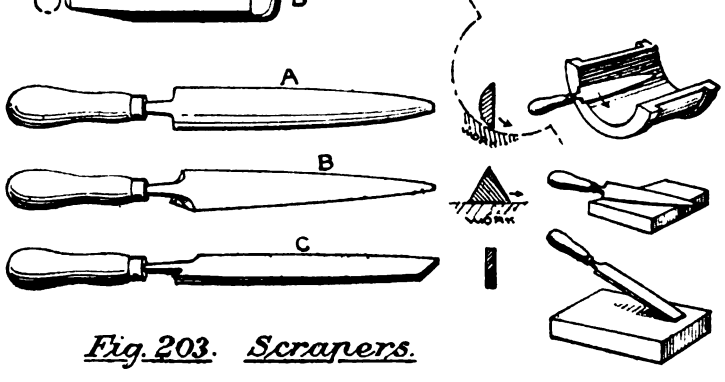

Fig. 203. Scrapers.

Digitized by Google

narrow flat surfaces or slot holes; and *flat* (C) used on the end for scraping a large plane.

Surfaces that are to be trued by scraping must be referred to *surface* plates, of which the Fitter should possess two, as perfect as possible in workmanship; one (A, Fig. 204), of

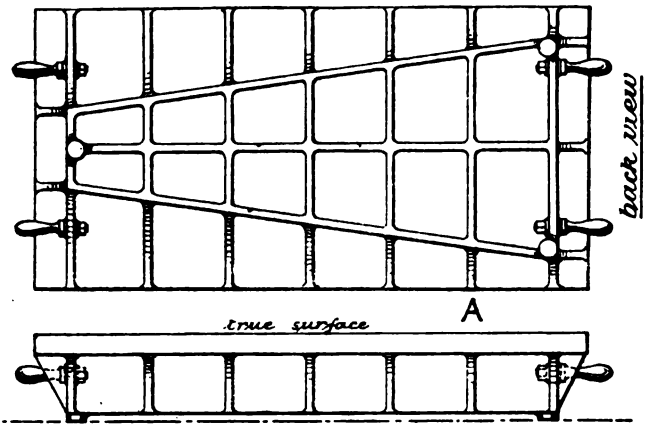

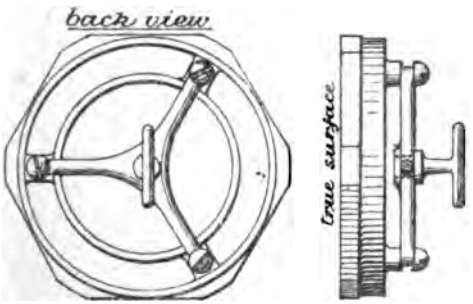

Fig. 204.

Surface Plates.

moderate size, so as to suit the average work to be *laid* upon it; and a *hand* plate (B, Fig. 204), to be moved *over* the work, which, being supplied with a removable handle, may serve as a fixed plate when needed. Their method of use will be treated later.

Lastly, Screwing Tackle is required, which consists of **Stocks**

Digitized by Google

and Dies for bolts or spindles, and taps for the nuts in which these spindles are to fit. **Taps** are made in sets of three to each diameter of screw, and to cut **V** threads of 'Whitworth' pitch; that is, whose pitch per diameter agrees with those in the table devised by Sir Joseph Whitworth, and which is here appended:—

V Threaded Screws (Whitworth).

Dia. in ins.	Threads per inch.	Dia. in ins.	Threads per inch.	Dia. in ins.	Threads per inch.	Dia. in ins.	Threads per inch.
3/16	24	1	8	2 1/4	4	4 1/2	2 7/8
1/4	20	1 1/8	7	2 1/2	4	4 3/4	2 3/4
5/16	18	1 1/4	7	2 3/4	3 1/2	5	2 3/4
3/8	16	1 3/8	6	3	3 1/2	5 1/4	2 5/8
7/16	14	1 1/2	6	3 1/4	3 1/4	5 1/2	2 5/8
1/2	12	1 5/8	5	3 1/2	3 1/4	5 3/4	2 1/2
5/8	11	1 3/4	5	3 3/4	3	6	2 1/2
3/4	10	1 7/8	4 1/2	4	3		
7/8	9	2	4 1/2	4 1/4	2 7/8		

Very rarely are taps used beyond 1½ ins. diameter, larger sizes being screwed in the lathe. The set of three is shown at Fig. 205, and includes 'taper' (A), 'middle' (B), and 'plug' taps (C).

These are made by forming in the lathe a perfect screw thread upon a 'blank,' and afterwards fluting to the section shown enlarged at E, so that when the tap is turned right-handed it has a cutting angle of 90°, and a small relief or clearance angle, removed with the file. Next, two-thirds of the length of the taper tap, and one-third of the middle tap are turned off, after which all are hardened as shown at page 127. When in use the nut must first be tapped, and the bolt afterwards screwed to fit it. After drilling to 'tapping size,' that is, to the diameter at the bottom of the screw thread, the taper tap is first entered (while the nut is held in the vice), and is turned round by a wrench D applied to the square on the top. Only when turned right-handed is the thread cut, as will be seen on reference to E,

Digitized by Google

Fig. 205; and a left-handed turn will release the tool. When the taper tap has done its work the middle tap is introduced in like manner, carrying the operation a little further, and finally the plug tap is passed through to give the finishing cut. After every stroke forward, the workman releases the tool slightly, so as to avoid undue pressure and perhaps breakage.

A stock and dies is shown at Fig. 206. A is the stock, provided with handles for turning, and B is an enlarged view of one of the dies, having a thread upon it in reverse, and four cutting surfaces at 90°, two to each direction of rotation: so that the thread may be cut both on advance and return. The dies are shown in position in the stock A, being dropped in at *e* and slid along: then tightened by a tommy applied to the screw *d*. The bolt to be screwed is first turned to the outside diameter of the tap, and then fixed in the vice. The dies are separated slightly, the stock brought over the bolt as at C, and the screw advanced. The stock is now rotated until the length of the bolt is traversed; then, on reversing the motion, a slightly increased pressure given to the dies; and so the bolt is re-traversed again and again, until so cut into by the dies as to show a perfect thread, and gauge to proper diameter, which may be proved by trying upon it the already tapped nut, and any degree of tightness obtained after such trial. At each stroke a slight backward release is given as before, and oil may be used as a lubricant. Various sized dies may also be applied to the same stock.

For screws under a ¼ in. diameter the **Screw Plate** in Fig. 207 replaces the stock and dies, and only one tap is required instead of three.

The pitch of a screw being measured lengthwise from centre to centre of the threads, let us unwind the latter, both at the top and bottom of the V groove. The diagram in Fig. 208 will show the result obtained in each case, and it will be clearly seen that the angle at the bottom of the thread is larger than that at its top. But the action of the dies, in cutting, is to first mark out the top of the thread with that part of the die formed to finish the angle at the bottom, and it follows that by the time the thread is finished, there will be an unnecessary endlong play of the bolt in the nut. These faults are somewhat avoided by the use of the

Digitized by Google

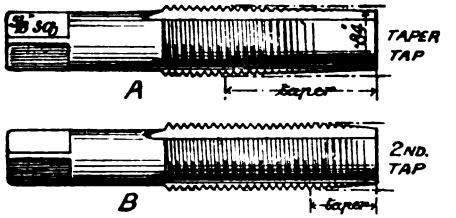

Set of Taps.

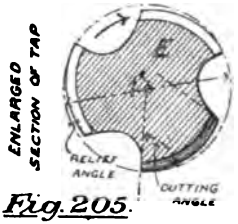

Fig. 205.

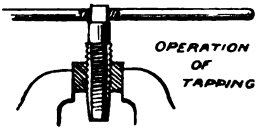

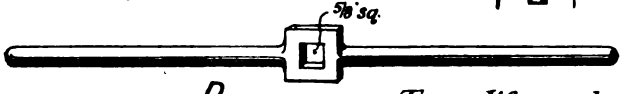

Tap Wrench

Stock and Dies.

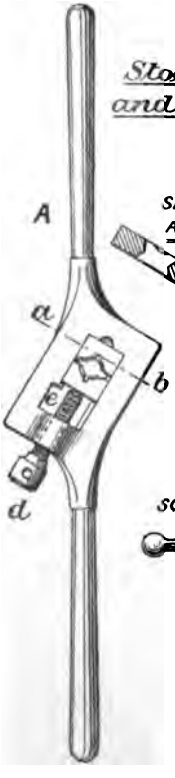

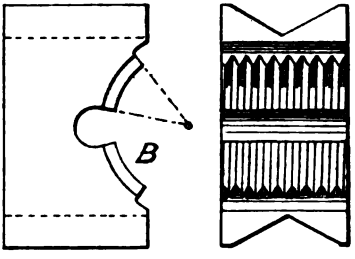

Fig. 206. ENLARGED VIEW OF DIE.

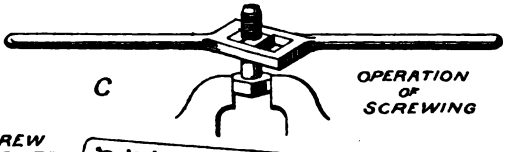

Fig. 207.

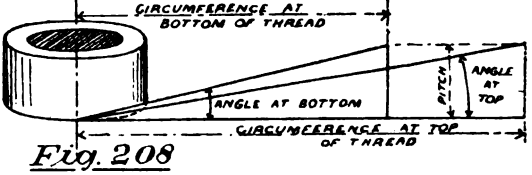

Fig. 208

Digitized by Google

Whitworth **Guide Screwing Stock** in Fig. 209. Here there are three dies, *a* being the 'guide,' cut so that its ridges just fit the bolt *at first*, and are made to mark out the correct angle for the *top* of the thread. *b* and *c* are the cutting dies (gradually advanced by the wedge bolt *d*), and these ultimately give the correct form for the *bottom* of the thread. But the only perfectly true method of cutting a screw is by means of the lathe, where the tool is fixed in the slide rest and the thread formed by the gradual advance of the rest coupled with the rotative movement of the work.

Machinists' requirements, in addition to the tools mentioned in Chapter V. These consist principally of grinding and sharpening tools.

The **Grindstone**, though banished from some shops in favour of emery, is still so extensively used as to deserve mention. It is shown at Fig. 210, and the stone fits on a square spindle having journals at the ends, lying in simple bearings. Large washers are placed on each face of the stone and the nut *a* tightens these. Fast and loose pulleys are provided for driving by power, and a shield *b* to prevent the water flying about, the latter being a necessary lubricant. *c* is a rest for the work, placed rather high up, and as close to the stone as possible, to avoid accidents. The direction of rotation of the stone is shown by the arrow, and the speed is such as to give from 800 to 1000 ft. per minute surface velocity. It is not advisable to actually run the machine in water as this tends to soften the stone.

The **Emery Grinder** is seen at Fig. 211. Its bearings are longer than those of the grindstone, and its peripheral velocity much higher, being about 5000 ft. per minute. A plentiful supply of water is required for tool sharpening, otherwise, with most emery wheels, the temper would be drawn and the wheel become glazed. The water is shown in the figure as coming from a vessel above the wheel, but is sometimes supplied under pressure from a small pump. Glazing is caused by the cementing material becoming softened by the heat produced in grinding, though properly the cement should wear gradually and fall away with the emery powder.

A very useful form of emery grinder is shown in Fig 212,

Digitized by Google

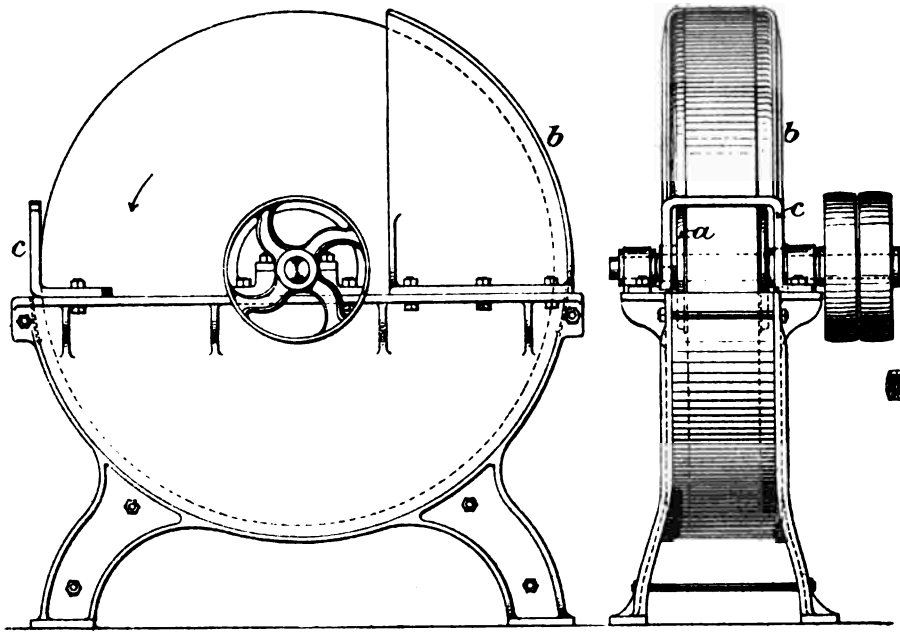

Fig. 210 Grindstone.

SCALE OF FEET 0 1 2

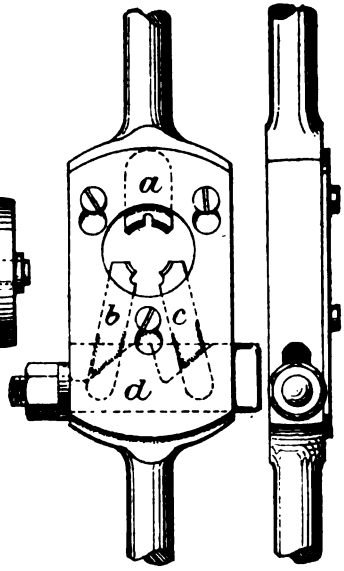

Whitworth's Guide Screwing Stock

Fig. 209.

Digitized by Google

suitable both for tool grinding on the larger wheel, and fluting, &c., on the small wheel. It is made by Messrs. Selig, Sonnenthal & Co., and a small attachment is provided to carry the wheel when grinding milling cutters, the latter being then held on the

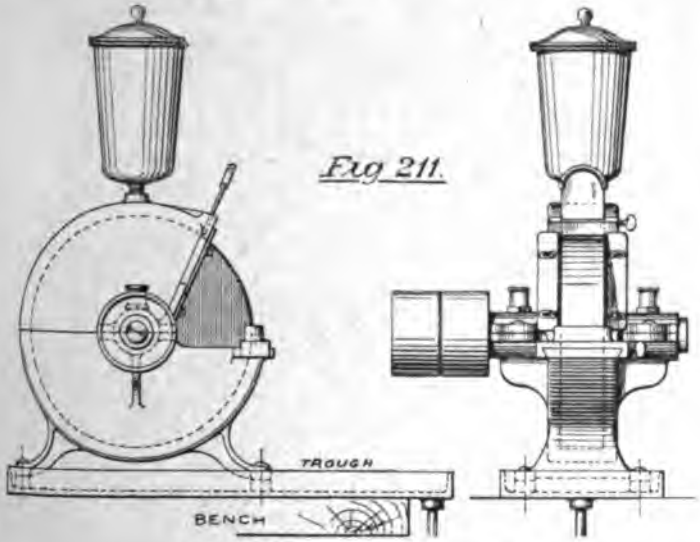

Fig 211.

Emery Tool-Grinder

spindle of the machine, and the wheel driven by catgut band. Emery wheels may be used for general grinding and removing of surplus material and thereby save a large amount of fitting.

Twist-Drill Grinder.—These are of various designs, the one in Fig. 213 being made by Messrs. Selig, Sonnenthal & Co. The end of a twist-drill would be conical in shape but for the clearance or relief angle. The true surface becomes, accounting for clearance, a cone having a helix for its base, and enclosing an angle of 118°. A section of this cone, then, made at right angles to one of the slant sides, would give a curve deviating slightly from a hyperbola, due to the clearance. We will now examine the method by which this hyperbolic surface is ground in Messrs. Selig's machine.

Digitized by Google

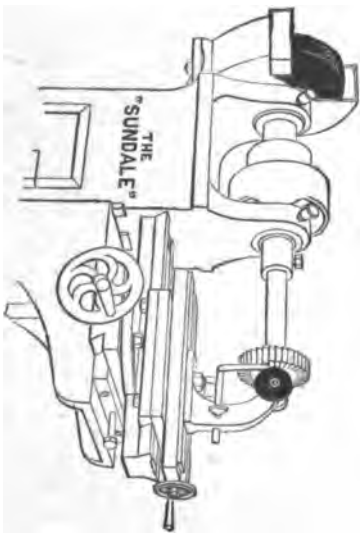

FOR CUTTER SIDES

FOR
CUTTER EDGES

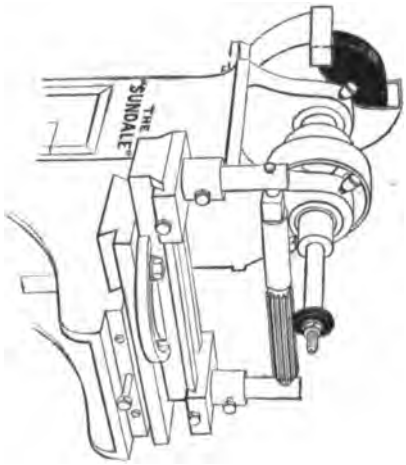

FOR FLUTING
RIMERS, TAPS &c.

Universal Milling-Cutter Grinding Machine.
BY SELIG, SONNENTHAL & Co.

Fig. 212.

Digitized by Google

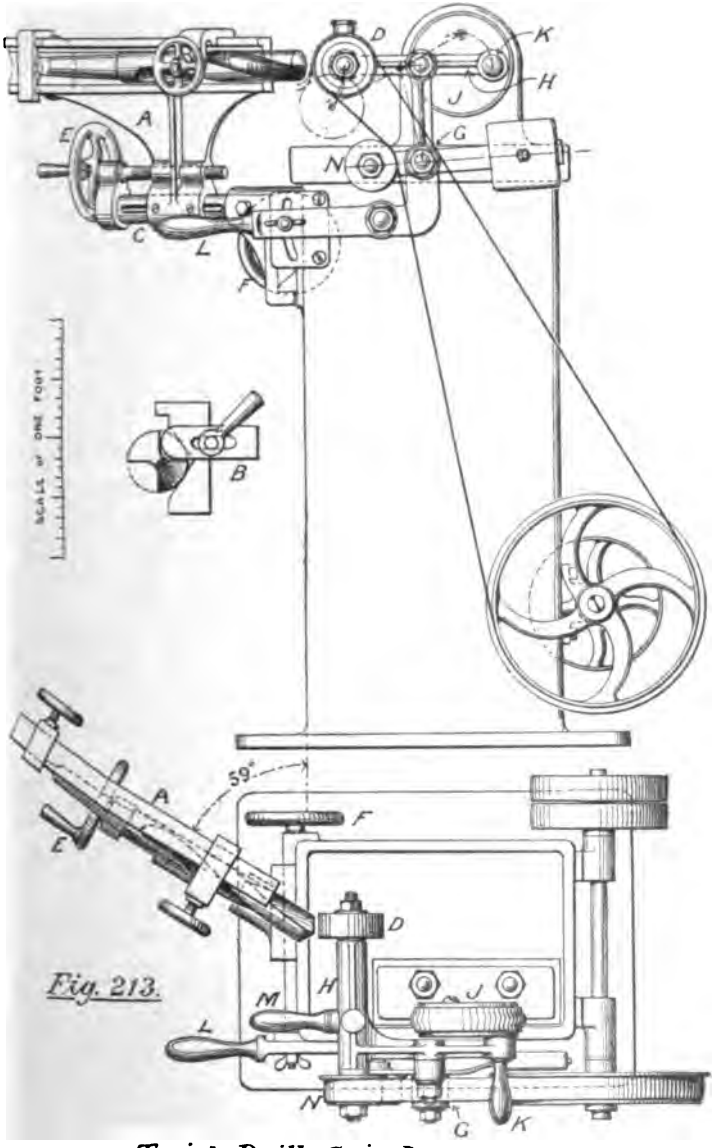

Fig. 213.

Twist Drill Grinder
(By Selig, Sonnenthal & Co.)

Digitized by Google

First the drill is clamped in a V groove made in the support A, and is held in the proper position by means of the plate B placed at the front end of the groove. The support A rides on a guide-arm C, which, in plan, is set at an angle of 59°, or half the angle of the drill. This allows the surface of the drill point to lie parallel to that of the emery wheel D. The hand-wheel E serves to bring the drill to the wheel, and F turns a screw for the purpose of taking up various surfaces of the wheel so as to produce equal wear. G is a fulcrum, supporting a rocking arm, which, in turn, carries a horizontal arm H. One end of H encloses the emery wheel spindle, and the other is pinned to the rotating disc J. It follows, therefore, that if the disc J be turned left-handed by taking hold of the handle K, the rocking arm will deviate to the front, and the centre of the emery wheel will describe the approximate hyperbola required to be ground off the drill point, as shown by the dotted lines in elevation. By fixing the fulcrum G at slightly varying heights by means of the hand lever L, it is possible to obtain sufficient variation in the drill curve to suit various sizes of drills; and, as the driving strap is changed in position, it is kept tight by the jockey pulley N provided with a balance weight. When using the machine the workman takes hold of the handles M and K, and pulls K towards him, and after one surface of the drill has been ground the latter is turned round in the V groove, and the opposite surface trued up, B then serving to register the second position with the first.

The Capstan or Turret Head.—Although we were supposed to have completed our descriptions of machine tools in Chapter V, our work would be incomplete without an account of this very important labour-saving appliance. The lathe in Fig. 214 is shown supplied with both Capstan-Head Slide Rest, and Screw-Copying apparatus, and is designed by Selig, Sonnenthal & Co. A is the head, which is capable of holding six tools, to be used in succession on the work in the lathe. These are placed in position by releasing a catch E, turning the head by hand, allowing catch E to return to its place by means of a spring, and finally clamping the rest firmly by means of the lever D; all this occupying but a very short space of time. Of course, it may often be necessary to use both slides to put the tools in position, as will be seen, and the

Digitized by Google

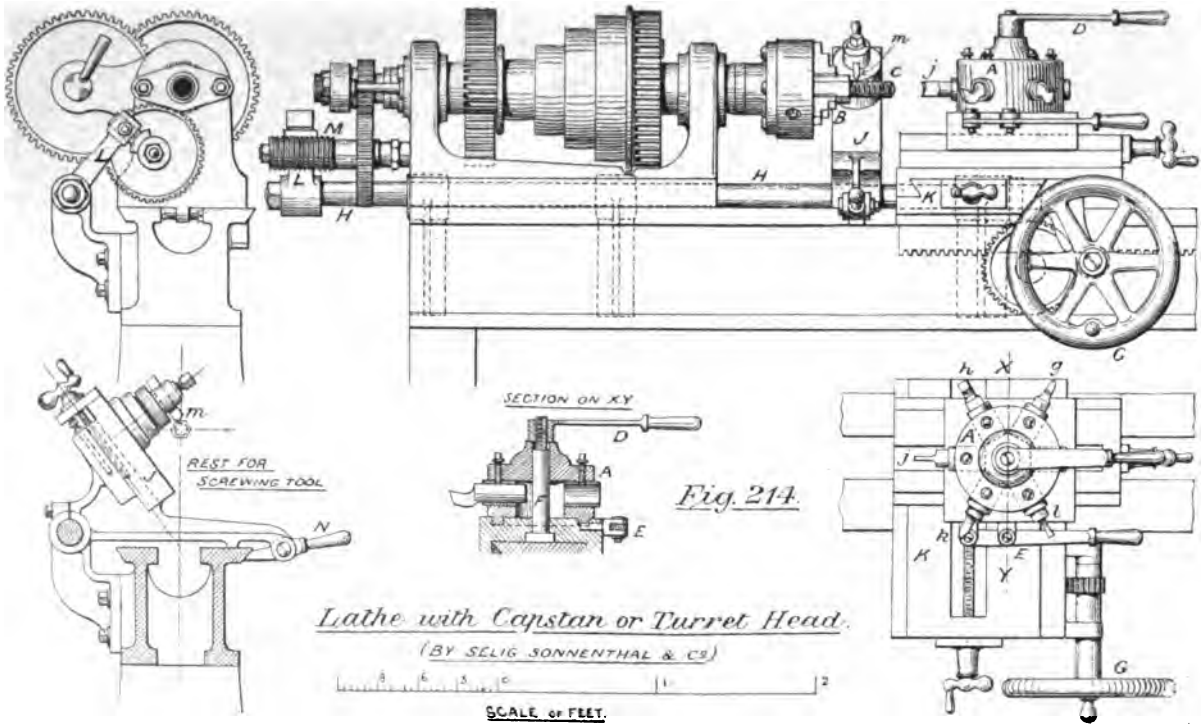

Fig. 214.

Lathe with Capstan or Turret Head.

(BY SELIG SONNENTHAL & Co.)

Digitized by Google

usual rack is provided for moving the saddle some distance along the bed.

Turning now to the screwing gear, J is a rest for the screwing head, with screw for adjustment, and when in position for work is held by the handle N. At the same time a lever L, provided with a screwed die fitting in the threads of the screw M, is placed at the other end of the shaft H, so that when the screwing tool is on the work, L engages with the screw M, but if the rest J be lifted and thrown back, L is at the same time released. When in operation the screw M is rotated from the mandrel by gearing of 2 : 1, so that a screw is cut at C, having half the pitch of the copy and of reverse hand, M being usually left-handed, and C right-handed. Of course the shaft H is capable of longitudinal motion, and the piece M, being hollow, can be removed, and another of different pitch applied, while the die, usually made of copper or soft brass, does not need special cutting, but will find its way into the threads of the screw.

Lastly, the lathe is provided with a hollow mandrel, which is very useful for small articles that can be cut from a continuous bar. An example of such work is shown in progress, being the making of a small tap bolt. A hexagonal bar is held in a concentric chuck, drawn forward to a convenient length, and the *roughing* tool *g* first applied, traversing to the front for position. The bolt being roughed down, is *finished* by the tool *h*, and has its end *rounded* by *j*. Next the *screwing* is performed by bringing over the tool *m*; and, lastly, the *chamfering* and *parting* are done respectively by the tools *k* and *l*. It will be, therefore, clear that a great deal of time and labour may be saved by the use of such a tool where articles have to be made in quantity. All bolts and studs are turned at such a lathe.

Erector's Tools.—These must include Lifting Tackle and a Portable Drilling tool. The latter is known as the **Ratchet Brace**, and is shown at Fig. 215 in position for drilling a hole. The pillar A is clamped to the work, and carries an arm F, which can be set at various heights, to take the brace and drill B. As the latter is ground to cut in one direction only (see *d*, page 168), the brace is made to enclose a ratchet wheel C fixed to the drill spindle, which wheel is driven by the spring pawl D, so as only

Digitized by Google

to be in action when the handle is pulled towards the operator; the back stroke being ineffective. The feed is given by holding the nut E with the left hand, while the drill is turned right-handed, the screw thereby receiving a downward advance.

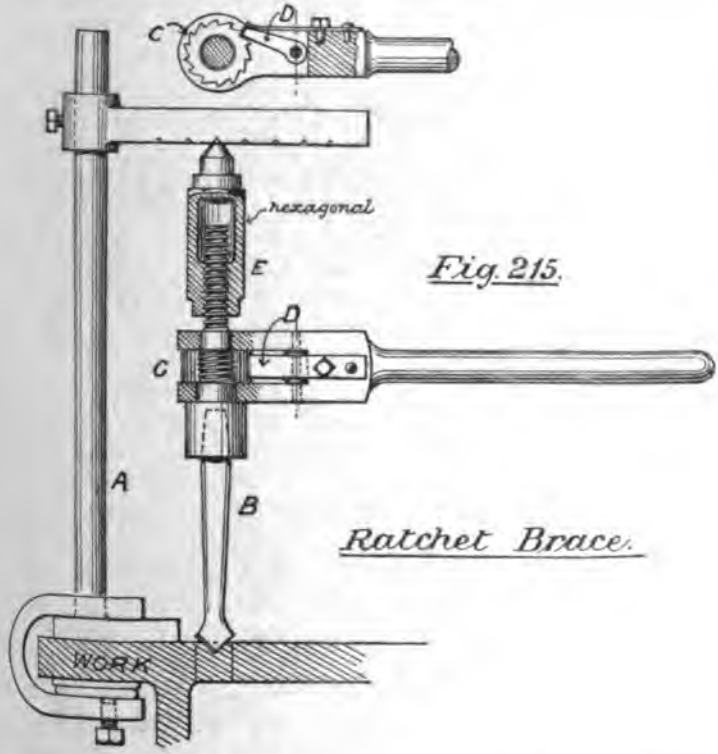

Fig. 215.

Ratchet Brace.

As a simple Erector's lifting gear, the **Weston Pulley Block** has stood its ground well. The principle is differential. The upper pulleys A B are cast together, and are slightly different in diameter. They are gripped by the chain, which lies in a specially-formed groove, and while the upper pulleys are once rotated, the lower or movable pulley is raised by half the difference of the circumferences of A and B, thus giving a great

Digitized by Google

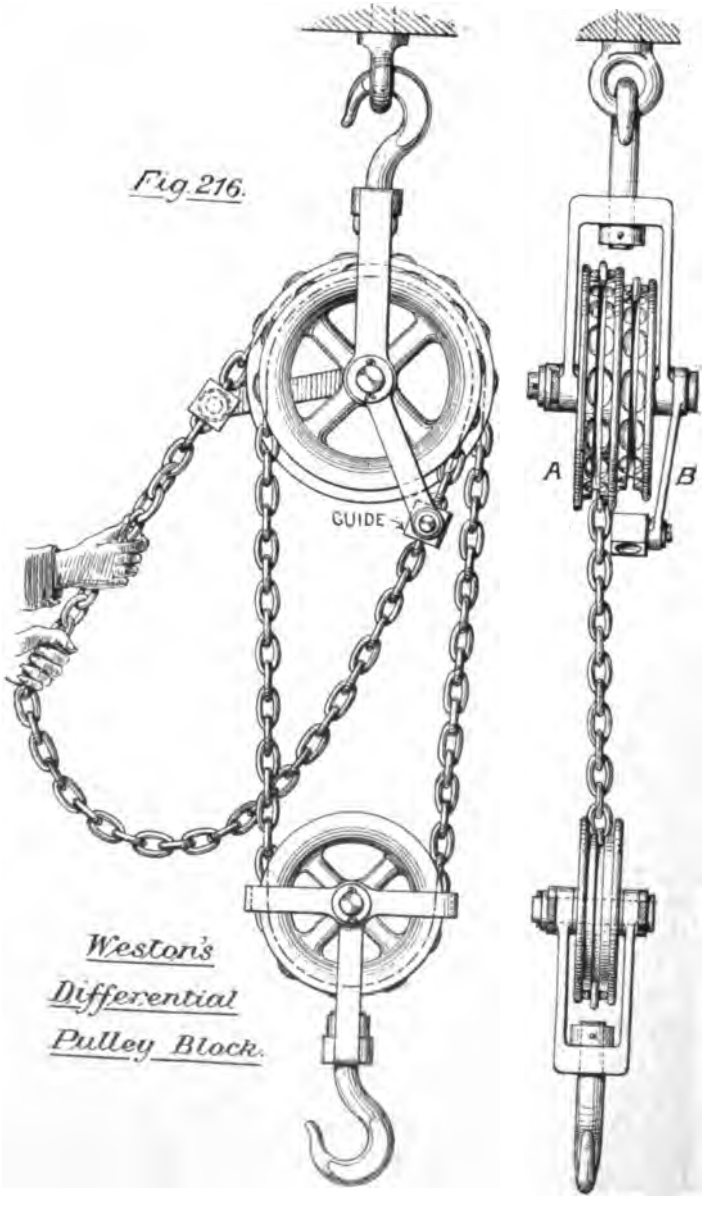

Fig. 216.

Weston's Differential Pulley Block.

Digitized by Google

mechanical advantage. There is a very large loss by friction (some 70 per cent.), but this resistance is useful as serving to sustain the weight when the chain is released by the hand.

Jacks are useful where overhead support cannot easily be obtained. Fig 217 shows a simple **Bottle Jack**, the 'bottle' serving as a fixed nut in which the screw rises when turned by a tommy bar; and Fig. 219 represents a more powerful **Jack with worm gear.** Here the screw is prevented from rotating by the jaw *d*, and is, therefore, raised by the rotation of the worm wheel A, which acts as a nut. In the example a handle of 14 ins. radius turns, by means of a worm, a worm wheel of 16 teeth, enclosing a screw of $1\frac{1}{4}$ in. pitch; and a weight of 10 tons is thereby lifted. The lower jaw *d* is for loads that are near the ground, and the jack may be traversed, when in position, by the ratchet arm C, applied to the screw *b* at either end.

The **Hydraulic Jack** is both very useful and very interesting, and is shown at Fig. 218. It has an upper and a lower jaw to suit various work, and both are part of the cylinder A. B is a reservoir in which is placed oil, or water and glycerine. The handle being moved upward on the fulcrum C, the pump plunger D is thereby raised, and the liquid enters the pump through the suction valve E; on the down stroke it is forced through the delivery valve F, and exerts a pressure behind the ram G, thus lifting the cylinder A. The valves are 'non-return,' being loaded by springs, and the ram is packed by a cup leather. It being required to lower, the screw-down valve H is released, and the liquid runs back to the reservoir. Screw J is for filling the latter, and K is an air hole to assist the pump suction. The power obtained depends both on the leverage and on the ratio of the areas of plunger and ram, and may be calculated in the same way as for the hydraulic press, which is discussed at *p.* 736.

There are a few other small tools of use to the Erector. The **D Cramp** A, Fig. 219*b*, is for temporarily fastening two pieces of work together; and the **Key Drift** B for releasing keys when fitting wheels upon shafts. The file C is provided with a special handle, usually made from a bent bolt, to enable a very large surface to be filed; and the **Square Drift** at Fig. 219*c* is really a Fitter's tool, being used to clean out square holes too small to be

Digitized by Google

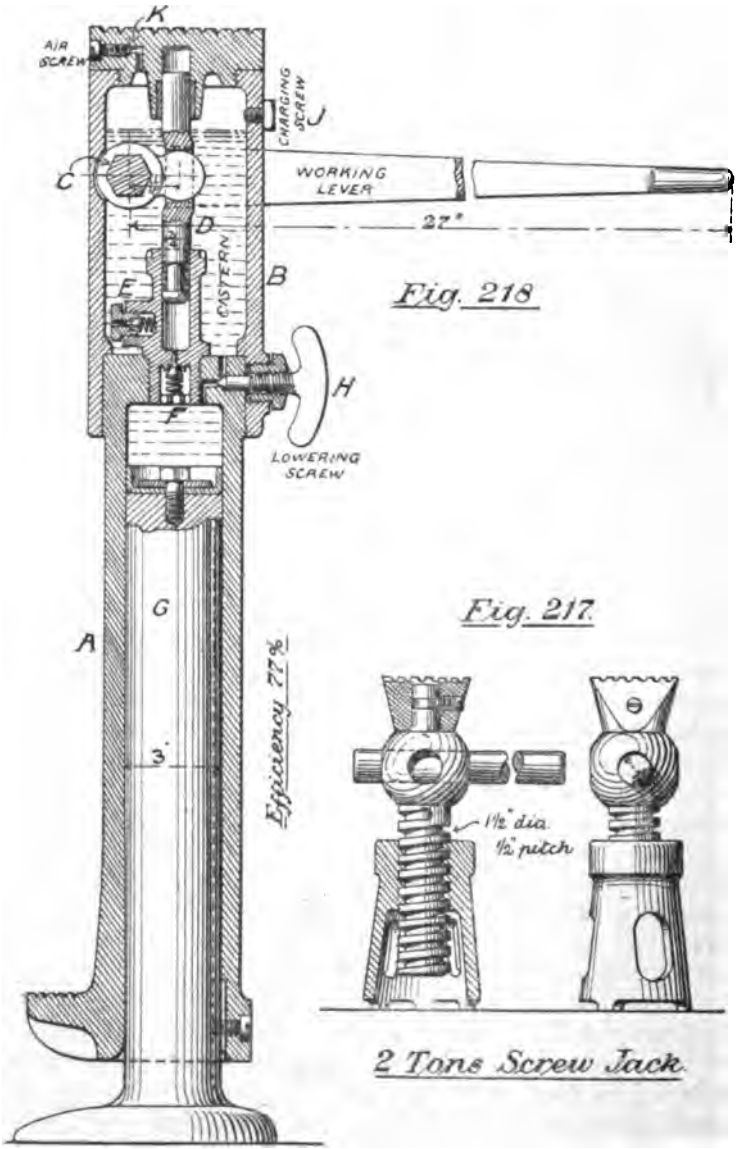

20 Tons Hydraulic Jack

Digitized by Google

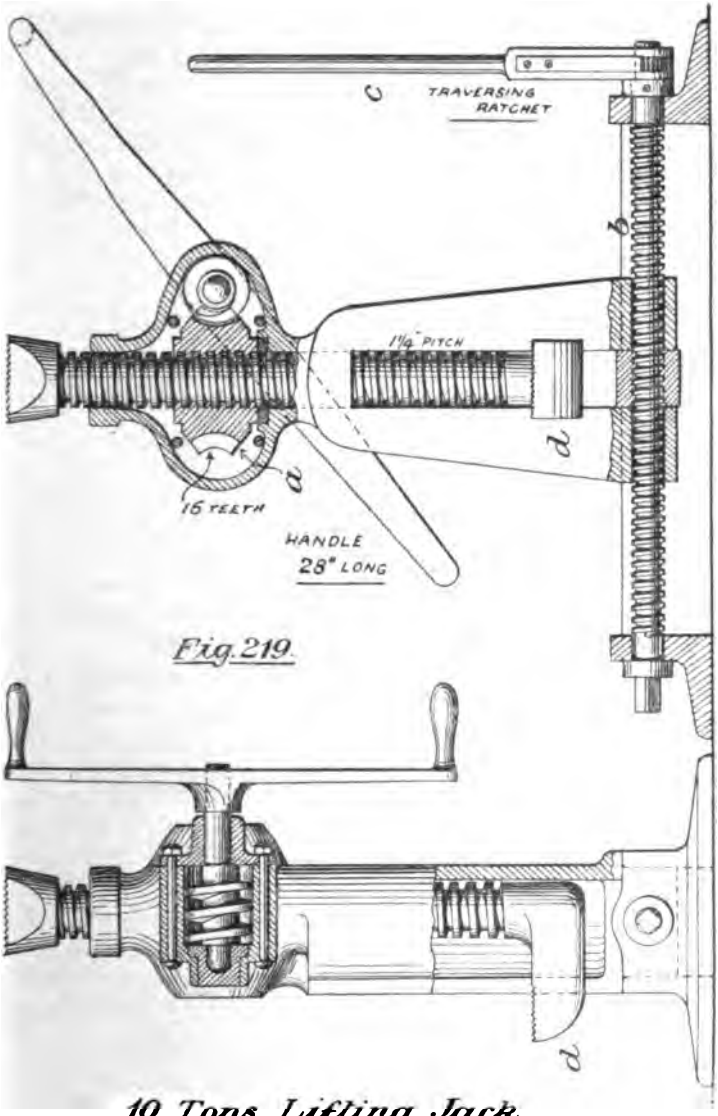

Fig. 219.

10 Tons Lifting Jack.

WITH WORM & WORM WHEEL
& TRAVERSING SCREW.

Digitized by Google

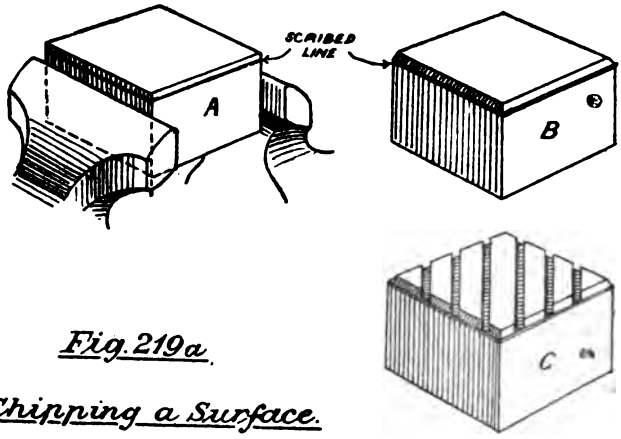

Fig. 219a.

Chipping a Surface.

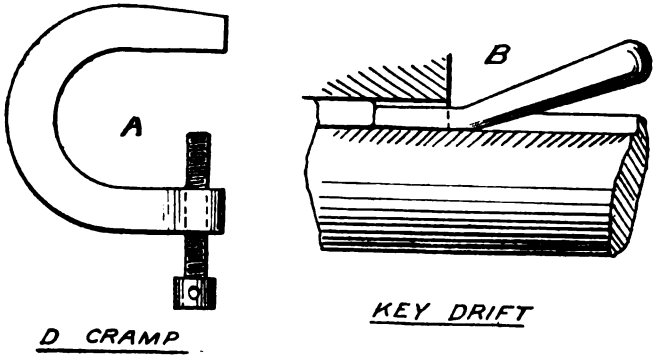

D CRAMP

KEY DRIFT

FILE FOR LARGE SURFACES

Fig. 219. b.

Digitized by Google

drilled and slotted. A **Lead Hammer**, for use on finished work; a **Hack Saw**; and an **adjustable spanner** are also advisable. Round holes are cleaned by the **Parallel Rimer** in Fig. 231, and taper holes by means of a **Taper Rimer** similarly constructed.

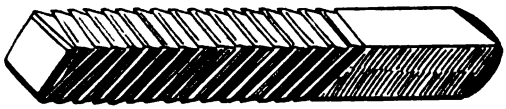

Square Drift. Fig. 219c.

General Processes.—Chipping.—Although hand processes cannot well be taught on paper, a general idea may yet be obtained. We will consider ourselves provided with a cubical block of metal, and that it is desired to remove a rather large amount of material from one of the surfaces. We commence by placing the block on the marking-off table, and, chalking the edges, scribe a line round as shown at Fig. 219*a*, to indicate the layer to be removed. This done we place the work in the vice and chip with flat chisel a chamfer along the edge of the block, *nearly* down to the scribed line, as at B, and make this fairly straight with a rough file. Now the cross-cut chisel is applied, and with it the cross grooves are cut as at C, each groove being tried with a straight edge, to make sure it is not carried too far below the general surface. We are now in a position to commence the removal of the strips that remain by means of the flat chisel, constantly trying the work with the straight edge, until the whole is as perfect as the chisel can make it. The position of the workman and the angle of chisel are shown in Fig. 220, and practice only will show the steepness of angle required for the deep cut, and the shallower angle for the lighter cut.

Filing.—The file is next applied, and the various 'cuts' used in order from bastard to smooth. True filing requires considerable skill, the tendency to the production of a convex surface being very great. The back stroke needs no pressure, as the teeth do not then cut; but during the forward stroke all possible

Digitized by Google

pressure is put on with both hands, and the file carefully guided in a perfectly horizontal direction, the position of the hands being shown in Fig. 221. Comparatively narrow surfaces that are not to be scraped are generally smoothed by 'draw-filing,' the file teeth being rubbed with chalk to compel the small particles to drop out, and thus avoid the scratching of the work, and a still further polish given by means of fine emery cloth wrapped round the file. The position is shown at Fig. 222. There is some difference in the grip of the file upon various materials, it being greatest on wrought iron or steel, and least on cast iron or brass, so that a file may best be used when new upon brass, then on cast iron, and finally on wrought iron or steel, for it will grip the latter when worn on the former; but the reverse method would not be feasible. During filing the surface should be constantly tested with straight edge, and when finishing, a hand surface plate, being slightly greased with oil and red ochre, will, on application to the work, at once indicate the parts to be taken down. The skin of a casting should always be removed, either by chipping or by pickling in dilute acid, before applying the file, otherwise the teeth would be at once dulled by such a hard surface.

Scraping.—If the surface is to be further trued, recourse is had to the scraper. We will assume that the tool B, Fig. 203, is to be used. It is held in the hand, as shown in Fig. 223, and the portions to be removed are discovered by smearing a hand surface plate with oil and red ochre and applying the plate to the work. Patches of colour will be transferred to the higher portions of the surface, and when these have been scraped down the work is cleaned again and once more tried, when the colour patches will be found larger in number, but smaller in size and more evenly dispersed. The operation is continued until further accuracy is hindered by the grain of the material. Then we have what is known in the workshop as a *true plane.*

Originating a Surface Plate.—When a new surface plate is required it is generally *copied* from a standard plate kept in the workshop, the method of the last paragraph being employed. But if no such standard be at hand, or if the truth of our first plate be doubted, it is necessary to use three plates in order to originate a true surface. These three plates are first planed truly

Digitized by Google

Fig. 221.

Filing.

Fig. 223.

Scraping

Fig. 222.

Drawfiling

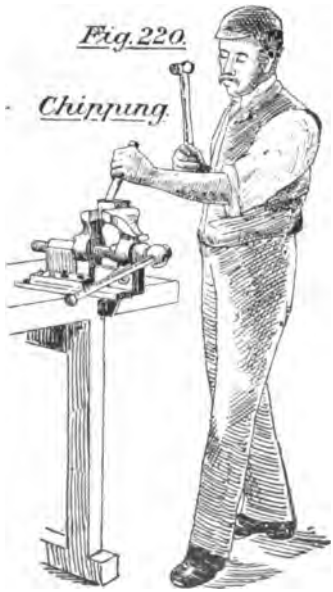

Fig. 220.

Chipping

Digitized by Google

by machine, and next filed with a smooth file to obliterate the tool marks. We will indicate the plates by the numbers in Fig. 223*a*. First (1) and (2) are scraped and tried by the colour-patch method, then (2) and (3), and, finally (3) and (1), the cycle of operation being repeated until all fit together with great accuracy. The reason for this method is shown in the diagram. Thus—(1) and (2) may happen to be convex and concave; then (2) and (3) would be made concave and convex. But if (3) and (1) be now put together, the convexity (or concavity) of both will be apparent, and may, of course, be corrected. But when all three fit equally well they must clearly be equally true.

Although fitting processes are less performed now than heretofore, yet all the best work is trued up by the last-described methods, after it comes off the machine, for however perfect the latter may be, there is always some little distortion caused by clamping the work, which, though slight, must be removed if great accuracy be required. (*See Appendix II.*)

Cutting a Screw in the Lathe.—This cannot be fully discussed until velocity ratio of toothed gearing has been entered on, but the practical considerations may be detailed. It will be clear, from what has been said in Chapter V., that if the leading screw be connected to the mandrel in such a way as to revolve at the same rate, a tool of the shape shown in Fig. 224 will cut a screw groove on the spindle that has been centred in the lathe, of the same pitch as the leading screw thread. If, on the other hand, the mandrel were to rotate at twice the velocity of the leading screw, a screw of half the pitch would be formed on the work, or of twice the number of threads per inch. Summing up then, the pitch obtained will depend on the relative velocities of mandrel and leading screw, a proportionately quicker speed of mandrel giving a finer thread, and a slower speed a coarser thread. The consideration of the proper change wheels to be introduced will be left for Part II., but we may here point out that when both shafts turn in the same direction the screw produced will be right-handed (viz., same as its leading screw), and when revolving oppositewise a left-handed screw will be the result.

The correct section of V thread, as adopted by Sir Joseph Whitworth, is shown at Fig. 225, one-sixth of the theoretical

Digitized by Google

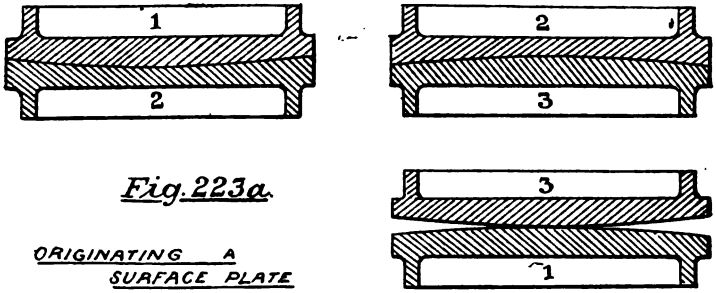

Fig. 223a.

ORIGINATING A SURFACE PLATE

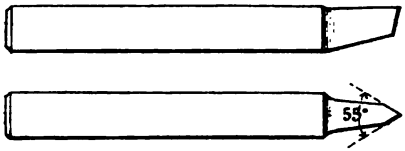

Fig. 224.

LATHE SCREWING TOOL

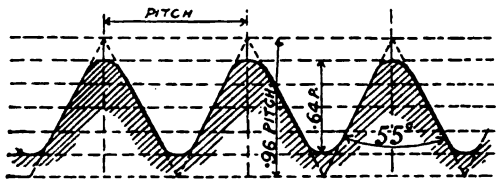

Fig. 225.

SECTION OF WHITWORTH V THREAD

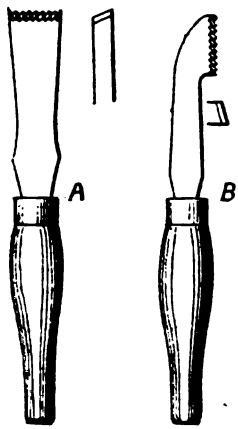

HAND CHASING TOOLS

Fig. 226.

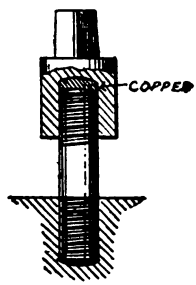

STUD BOX

Fig. 227.

Digitized by Google

depth being rounded off at top and at bottom, and the angle being 55°. The rounding at the bottom is given by the tool in Fig. 224, but that at the top, as well as the general finish, is obtained by hand-chasing tools. These are seen at Fig. 226, where A is for the spindle, and B is for chasing the nut; the first being held transversely and the second longitudinally. They are both carefully cut to correct section of thread. (*See Appendix II.*)

Fixing a Stud.—Studs are used in places where bolts are inadmissible. because the material cannot be drilled right through. The stud hole being drilled and tapped, and the stud having been turned and screwed so as to fit *tightly* in the stud hole, the former is entered, and a stud box placed upon the opposite end, as in Fig. 227. Outwardly this tool has the appearance of the box key described on page 113; but is screwed internally to fit the stud, and has a small plate of copper at the bottom of the socket to avoid damaging the work. A wrench being applied to the square, the whole is advanced until stopped by the plain portion on the stud, when the box may be removed by a sharp back turn.

Cylindrical Gauges are of great value in securing accurate work. They are shown at Fig. 227*a*. B being termed a 'plug,'

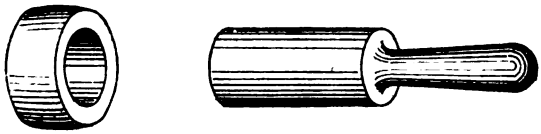

Cylindrical Gauges.

Fig. 227a.

and A a 'ring' gauge. The first is used for testing the accuracy of a socket, and the second that of a pin, and both are made to such perfection that the tested pin would be found to fit in its socket freely, but with no appreciable shake. There are cases where the ring gauge cannot be applied, and then the 'horseshoe'

Digitized by Google

form is used instead, combining both internal and external gauge. For interchangeable work *high* and *low* gauges are required, varying in size by a very slight but known amount, and the aim is to make the work lie somewhere between the two, so that any pair of parts will then fit, and the 'play' between them never be more or less than certain fixed values. (*See p.* 277.)

Details of Horizontal Engine.— Having fully described machines, tools, and general operations, we shall now proceed to apply the information obtained to enable us to take piece by piece the various parts constituting a 20 *Horse-power Non-condensing Engine*, with automatic expansion gear; and, having received such parts in the rough condition from the Smith or Moulder, to follow them through their various stages, until put together by the Erector to form the complete work. That course has been thought advisable in dealing with this, the most important chapter in Part I, in order to avoid any risk of omitting a good example; it being supposed that if a student could thoroughly discuss the whole of this machine he might be considered reasonably capable of thinking out any new case that might be placed before him. In order to avoid repetition we will make a few premises.

The Marker-off either chalks or white-washes his work before commencing, and obtains the height for his scriber point by first marking the same on the block B, Fig. 192, and then setting the point to this mark. He should know something of the allowances made by Smith and Pattern-maker, which are usually $\frac{1}{8}$ in. all over machined surfaces, and in extreme cases $\frac{1}{4}$ in. Bed plates, for example, warp $\frac{1}{4}$ in. or even more, and special material must be left on their seatings.

Machining is marked on drawings to indicate *all* tooled surfaces; being shown by red lines; but in our case a thick dotted line will serve the same purpose, thus: ▬ ▬ ▬ ▬. Further, although such drawings are copiously and fully supplied with dimensions, these will be omitted in our examples, the scale being given instead. The sizes represented on the drawing are known as 'finished sizes,' and the allowance on machined parts is left to the judgment of the Pattern-maker or Smith.

In drilling, there are at least three various sizes that a hole may be made, although all figured the same on the drawings.

Digitized by Google

Clearance size is for bolt holes, so that the bolt may drop in freely; *tapping* size is that at the bottom of the screw-thread; and *gauge* size is divided into 'working fit' and 'driving fit,' the first having both pairs made to gauge, and the second having its socket to gauge and the pin callipered to suit the plug gauge.

As regards the drawings; these are classified as previously described, but we shall further give each article a number in Roman letters; and in nearly all cases the drawing itself will be indicated by the letter A, while the various operations take the succeeding letters of the alphabet. At the close of the descriptions a 'general arrangement' or complete drawing of the engine will be given, and we shall thus have followed in nearly every particular the practical methods of the workshop. One sheet is omitted, that representing a collection of all the bolts and studs to be used on the engine. This has been thought unnecessary, as the capstan lathe has already been described where these parts are tooled. It may further be mentioned that there are always more ways than one of performing the various operations, both as regards sequence and the tools used, and it may also follow that each method is equally good; in many cases, too, where the marking-table is mentioned in our descriptions, it might be found more convenient to scribe the work while in the machine.

I. Regulator Lever (Fig. 228).—This must first be set upon edge, on blocks, as at B, until level; and a centre line be scribed all round it. The circles may be struck, just to see if the stuff 'holds up,' and the length of the handle marked off from these. Now punch all the five centres. (A method of centering with scribing block by laying the lever successively on its four sides and scribing any convenient height is shown at D.) Lay the lever next on its side (C), and pack up until the centres are quite horizontal, as measured with scriber. Then scribe the centre line all round, and mark at the same time the thickness of the bosses, and of the lever itself, as measured from this centre. Next put in the lathe, and square-centre; then turn and polish the handle. Remove and clamp to the table of a shaping machine, so as to shape across the flat parts; then clamp on the lathe face plate as shown at E, for the purpose of drilling the

Digitized by Google

bosses and turning them. Of course the boss must be carefully centred on the plate, and the blocking must be exactly the same

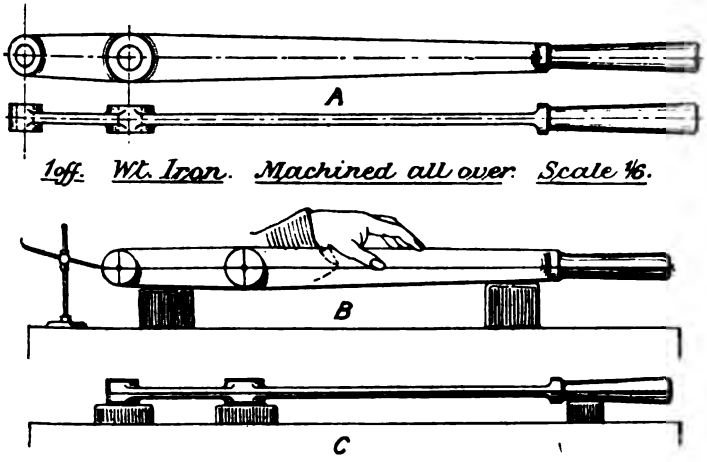

Fig. 228.

I. Lever for Regulator Valve.

thickness. The drill point is placed against the centre of the boss, and the loose headstock brought up to the other end of the

Digitized by Google

drill. The latter is then packed in the slide rest, and firmly grasped, when the drilling may proceed. The bosses are surfaced to the scribed mark, and to the shaped lever; the diameter being gauged by callipers. When these are finished, the sides are marked out as at F, and the lever next clamped on an 'angle plate' placed on the table of a planing machine (see G), being packed at such an inclination that the edge may be planed; and four settings are of course necessary. The angle plate is an appliance which will be found useful for a variety of purposes. Now finish off the lever by draw-filing and emery cloth. If the work be too long to allow the bosses to be turned, the latter are tooled as separate pieces, having a portion of the lever attached, and are afterwards welded to the handle by the smith.

II. Brackets for Regulator Lever (Fig. 229).—First centre at the ends as at B, and punch; then try in the lathe to see if there is sufficient stuff at the middle. Turn the shank to dimensions, gauging with callipers, and cut the screw thread in the lathe at the same time; the taper of the shank being obtained by setting the top slide of the rest by the requisite amount, and giving a hand feed to the tool. Polish while in the machine, with file and emery, all but the collar, which may be left rough, because it is to be afterwards cut; the diameter then being made equal to that across the corners of the hexagon. Now remove from the lathe, and, setting again on the table in the position B, line out the flat cheeks of the fork, and shape or mill these. Upon the tooled surface thus obtained further lining is performed as shown at C, the centres being again placed exactly horizontal. Strike the pin hole and punch. Drill the hole in machine vice to gauge, and, bolting down to the centre of a slotting or vertical-milling table D, tool all round with hand and machine feed. Once more line out, this time for the fork slot as at E, and also mark a circle for drilling, making sure that the line *a* is taken for this, not *b*. Drill the hole last marked, and take out the rest of the fork slot in the slotting machine, finishing by cutting the oblique portion in the vice by chipping and filing (F). It may here be mentioned that all bright work is held in the vice between plates of lead resting on the jaws, and called 'vice clams.' Lastly, cut the hexagon on the collar by dividing out as at G, and filing off the flats.

Digitized by Google

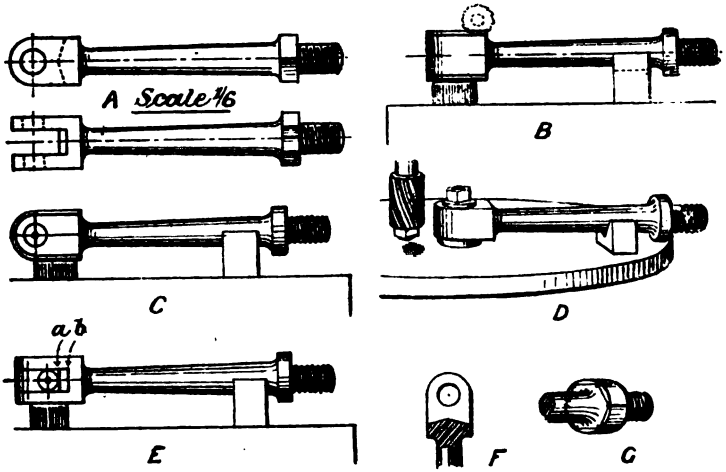

II. Bracket for Regulator Lever. 1 off. W.I.
Machined all over Fig. 229

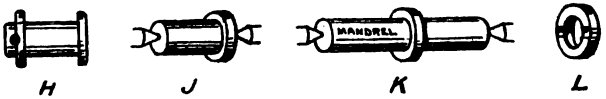

III Pins for Regulator Lever 3 off. W.I.
various sizes Fig. 230.

Fig. 231

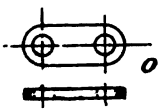

IV Links for Regulator Lever
2 off. W.1.

Scale 1/6

Fig. 232

Digitized by Google

III. Pins and Washers for Regulator Lever (Fig. 230).—Three of these are required, of various sizes, to be made to the drawing H. Centre for the lathe; turn to gauge and polish as at J. The washer is made from a piece of plate, by first drilling the hole, and afterwards turning the rim on a mandrel, as shown at K. Then, the lever, bracket, valve spindle, and links are all fitted together; a *broach* or *parallel rimer* (Fig. 231), of exact gauge passed through each set of holes to clear out the irregularities produced in drilling, the pins put into place, and the split pins marked off —— a groove being cut in the washer as at L, to prevent turning and undue wear.

It is advisable to make all pins of steel that have to withstand much wear, and their corresponding lever bosses, if of wrought iron, should be case-hardened.

IV. Links for Regulator Lever (Fig. 232) are marked on a piece of plate as at M, which has first been planed on all four sides, then drilled, cut in two pieces, and bolted together. They are finished off by filing in the vice, though, if large, they would be slotted round, or milled. Polish with emery.

V. Regulator Valve Spindle (Fig. 233).—Lay this on its side, in V blocks, as at B; centre the ends, and scribe the flats. Then put in lathe and turn to exact diameter, at the same time cutting the screw. Remove, and tool the flats in a shaping machine. Now mark off the eye, as at C, and punch the centre; drill the hole to gauge, and take off the outer material with vertical milling cutter fitting the curve *a*. Finish off in vice and polish.

VI. Nut for Valve Spindle (Fig. 234).—Lay on table, and line out for thickness, as at B; plane or shape the flats; mark off the hole, as at C; and, placing the nut in a concentric chuck, bore and screw in the lathe as at D, so as to fit the valve spindle easily.

VII. Regulator Valve (Fig. 235).—After cleaning with rough file to remove fins, this has only to be machined on certain surfaces, as shown by thick dotted lines on the drawing A. As the face must be reasonably true with the lugs, first find centre of the latter, as at B, and square a line from the back surface *a a*, having previously blocked the hole with a piece of hard wood; do this for both lugs. To produce this centre line on to the

Digitized by Google

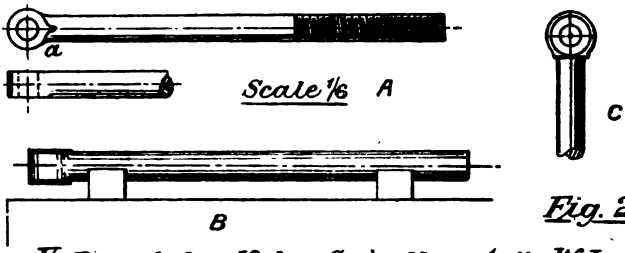

Fig. 233.

V. Regulator Valve Spindle 1 off. W.I.

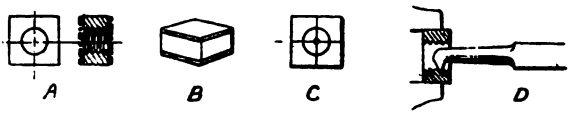

Fig. 234.

VI. Nut for Valve Spindle 1 off. Gun Metal.

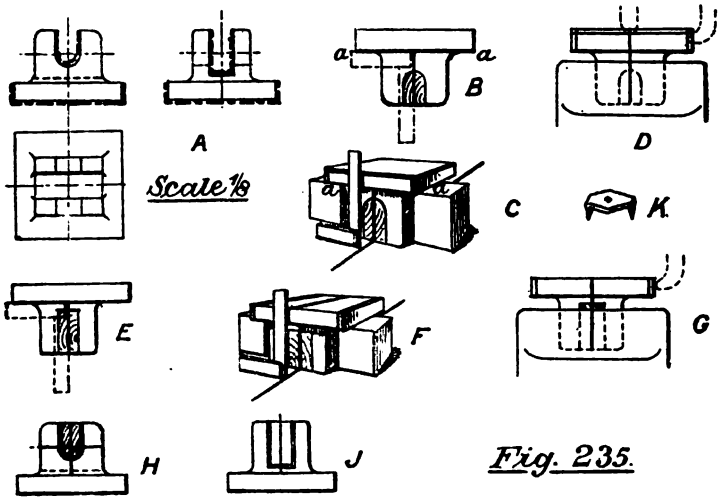

Fig. 235.

VII. Regulator Valve. 1 off. Gun Metal.

edge of the plate, the valve is supported, as at C, on the marking-table, so that its back surface, our present guide, is level, and the

Digitized by Google

just scribed vertical line put in contact, both at back and front, with a line which has been marked on the table. Then set up this line with square, as shown, so as to mark the centre of the valve plate, and measure off to right and left the width of the valve. Scribe also the thickness of the plate all round. Now set in machine vice to plane the top surface, as at D, with a front tool, and the edges with a side tool, and be sure that the travel of the tool is exactly coincident with the scribed lines. The valve is now removed, and treated similarly for planing at right angles to the former direction. For this the fork is blocked, as at E, and the centre squared; next produced upward, as at F, and the width of valve marked, then planed, as at G. There only now remains the cutting out of the fork, which is lined by squaring and scribing, as at H and J; then J is planed out, and H is finished by hand. Finally scrape the valve surface very truly, as described in a previous paragraph. It should be mentioned that when wood is used to block or bridge a hole, and a centre required, it is advisable to shape a small piece of tin or zinc, as shown at K, to receive the compass-point.

VIII. Regulator Valve-box, Cover, and Gland (Fig. 236).—Commence by bridging or 'spanning' the two end holes, and striking the circle representing the diameter of the flanges, as shown at B; measure also the length of the box over the flanges, and mark this. The valve-box is now to be mounted on the face plate of a lathe, and as the casting is rather long, it must be supported by angle plates, as shown at C, being tightly bolted between them, as well as having one flange fastened to the face plate. Having been carefully adjusted until central, it is turned on one flange and surfaced; reversed, and turned on the opposite flange. Next place the box on a planing machine, as at D, making sure it is both level and square, packing if necessary, and having scribed the top seating and boss, measuring from flange centre, plane these. Remove, and bolt to slotting machine in a similar manner, as at E, and slot the front face, measuring the distance *a* in finishing. It should be noticed that two tools are here necessary, cranked respectively to the right and left hand, as at F. Set out the bolt-holes in circular flange as at G, and drill with clearance drill. Set level as at G, and, squaring up the centre line, join this

Digitized by Google

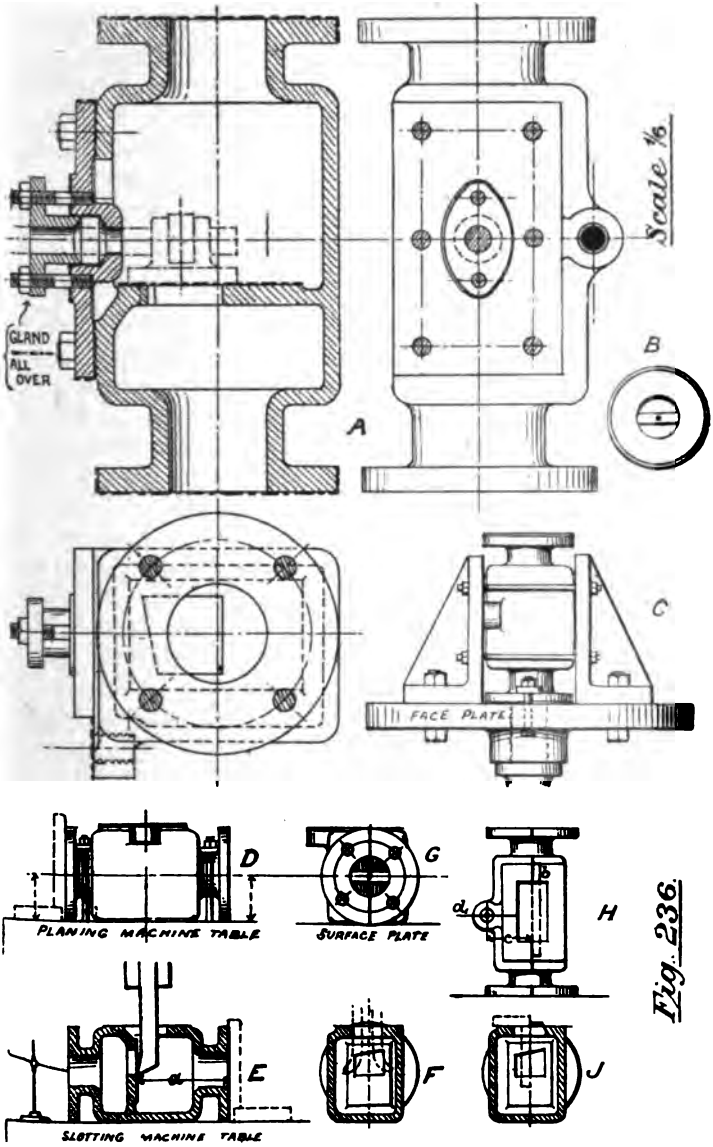

Fig. 236.

VIII Regulator Valve Box. 1 off. Cast Iron.

Digitized by Google

along the top, as at H. Then, in position H, scribe and square the centre *d*, measuring the distance *c* from a straight edge at *b*. Strike the circle for the hole, drill this tapping size, and tap to suit the Bracket No. II. To ensure rigidity, the bracket should have been screwed rather 'full,' and be now taken down with stock and dies until a perfect fit in *d*. The port is to be marked off, as at J, with square and straight edge, and measurements from the square flange, and the edges are then to be chipped and filed by hand, an operation involving some trouble.

The **Cover** is to be planed and drilled. Find the centre of the gland seating as at B, Fig. 237, and mark also the centres at each end; then draw a line across. Set the cover level on the marking-table, as at C, and squaring up the centre *d*, scribe the thickness of the plate, and mark its width. Set central, on the planing machine, in a machine vice, or its equivalent, as at D and E. Level the cover to the scribed lines, and plane the side surfaces, *a a* and *b b*, as well as the edges. Remove, and square across for the adjacent sides, as shown at F, using the gland seating as a guide. Then set in the planing machine, and tool the edges; finish the surfaces *e e* to the same level as *a* and *b*. Now reverse the plate, and, setting level in the machine vice, as at G, scribe the gland surface to measure correctly from the surface *a b e*, and plane. The cover is next to be marked for drilling, which is shown at H, and the holes *g g* drilled to clearance size, *h* to tapping size, while *j* must first be drilled for the smaller diameter, and the stuffing-box afterwards taken out with a pin drill specially cut, as at J.

The **Gland** is first drilled in the lathe (B, Fig. 238), which may be done more truly by blocking up the hole with wood through its entire length, and letting the drill take this out. The front may be surfaced at the same time. Next place upon a mandrel as at C, and turn down to dimensions. Remove, span the centre, and mark off the gland face as at D; then drill the holes (clearance), and finish off the edge with dead smooth file and fine emery. The cover holes are lastly to be marked off on the box by tracing through from the cover, then drilled and tapped.

IX. Valve Spindles: Main and Expansion (Fig. 239).

Digitized by Google

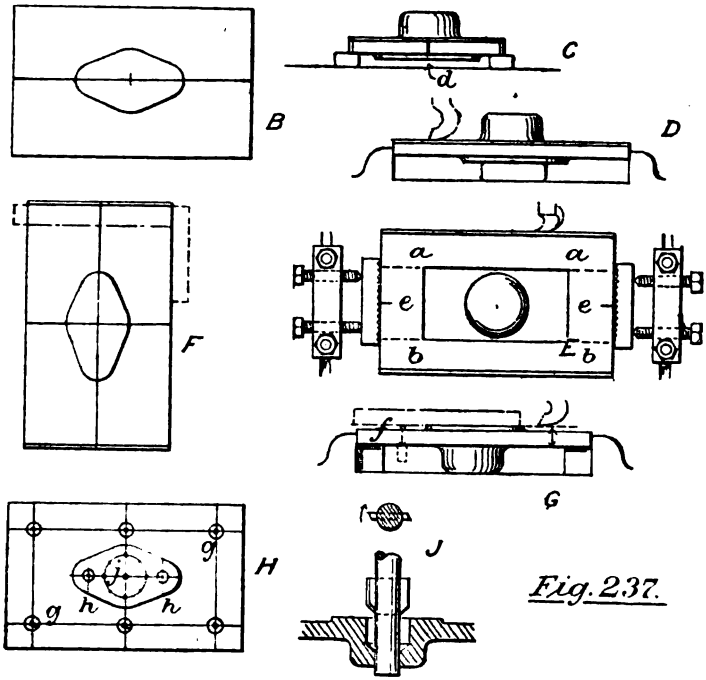

Fig. 237.

Cover for Regulator Valve Box.

1 off Cast Iron.

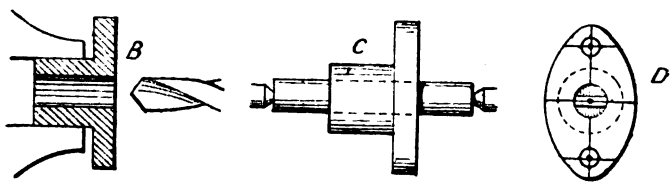

Gland for Valve Box. 1 off.

Gun Metal Fig. 238.

VIII a.

Digitized by Google

As with No. II., these are first centred, and scribed on the flat cheeks (D); then turned and screwed, and shaped on the cheeks. The hole is next struck as at E, drilled, and the outer curve milled; and the fork (F) is taken out last by drilling and slotting. Broach right through, and turn the pin as was described for No. III.

The **Nuts** are best finished by putting a number of them after drilling to tapping size, upon a mandrel, which is then placed between dividing centres on a milling machine, and milled by means of twin mills (see B). They are to be turned axially through 60° at each operation, and must be afterwards tapped, and chucked in the lathe for facing and chamfering.

X. Expansion Eccentric Rod (Fig. 240).—Centre this; also mark the length between the shoulders, and square up the thickness of the T end. Turn to the requisite taper by 'setting over' the loose headstock, as shown in plan at J, so that the front surface of the rod will then be parallel with the lathe bed. The amount of set-over will, of course, be equal to half the difference of the two end diameters. Surface also the T end. Remove from the lathe, lay level as at K, and scribe the cheeks *b*. Square and scribe the tee at *a* to dimensions, measuring from centre, and strike also the bolt-holes. Drill these to clearance size, and shape *a* and *b*. Then mark out the eye as at L and mill this with a cutter having the proper curvatures. The rod is long, but as the milling only requires it to sweep through a semi-circle, there will be no serious difficulty if it be well clamped.

XI. Main Eccentric Rod (Fig. 241) presents no difficulty after the previous descriptions. (*See Appendix II.*)

XII. Intermediate Valve Rod (Fig. 242).—This also would be tooled by previous methods. The manner of fastening the pin is worthy of notice. The bearing surfaces of the fork are but narrow, and it is unwise to allow movement at that place; the die, on the contrary, has a good wide surface, so it is there only that wear should be allowed. After the pin is put in position, a parallel hole is drilled right through the fork, and enlarged with taper rimer, the pin for this hole being turned in the lathe with an oblique hand feed. *All these pins are of steel, and all wearing surfaces are case-hardened.*

The **Die** is surfaced and bored in the lathe, and afterwards

Digitized by Google

Fig. 239 Scale ⅛. Fig. 240

Digitized by Google

shaped to dimensions, leaving sufficient excess of width to allow of accurate fitting to the Radius Link, after which it is case-hardened and polished.

XIII. Guide Bracket for Valve Rods (Fig. 243).—The machining is shown on the drawing at A. Set the bracket vertical by trial with square as at B, and line out the base *a*. Scribe also the line *b* all round the casting, and at the proper height from *a*. Lay level on its side as at C; find by measurement the height of the boss and that of the foot centre. Scribe the thickness of boss. Next shape to these lines as at D, the boss with a front tool and the foot with a side tool. It should be noted here that a side tool ought never to be used if it can be avoided, for there is a great twisting action thereby produced which is calculated to wrench the tool from its box; but a good deal is sometimes sacrificed to save two settings on the machine. Re-scribe the line *b* from the marks left on the side of the boss, and lay the bracket on its side as at F, packing until the centres are level; then scribe the heights of the large holes on both faces and strike the circles. The casting being hollow, the core-hole must be spanned as at G, in order to strike the bolt-holes, whose centres are found by scribing a horizontal line and squaring a vertical one when in the position C, and then bisecting the right angles obtained. The bolt-holes are drilled as at H, but the large holes are bored in the lathe, the bracket being clamped to the face plate, and the latter provided with a balance weight. This will be understood from B, where the face plate will be seen dotted, and the bracket clamped in position for boring *b*. In all such cases it is necessary to first drill a hole large enough to admit the boring tool.

The **Bushes** are bored in a chuck, and finished on a mandrel, and afterwards driven into the bracket, a block of wood being placed upon them to receive the blow of the hammer.

The oilcup cover is drilled for the hinge-pin, and finished by hand, and the oil-holes drilled, and countersunk slightly at the top. An $\frac{1}{8}$" spiral channel should be chipped in each bush with round-nosed chisel to allow the oil to flow.

XIV. Eccentric Sheave and Straps (Fig. 244).—The cast-iron sheave will be taken first. It is of the solid form, being

Digitized by Google

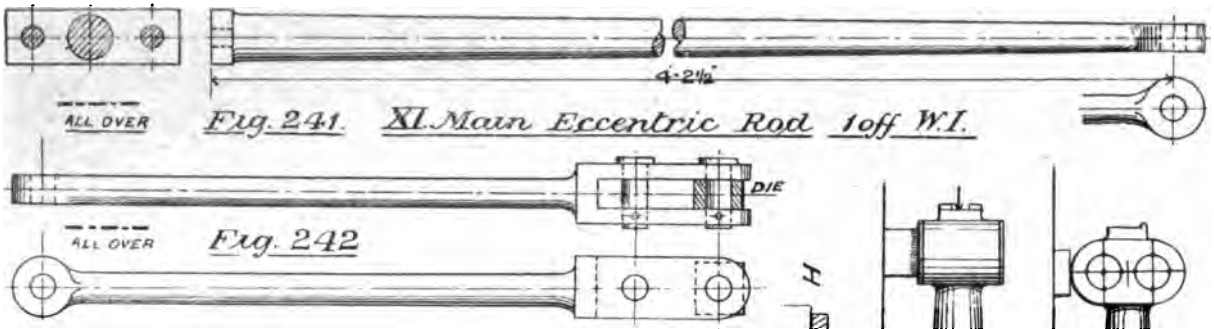

Fig. 241. XI. Main Eccentric Rod 1 off W.I.

Fig. 242

XII. Intermediate Valve Rod 1 off. W.I.

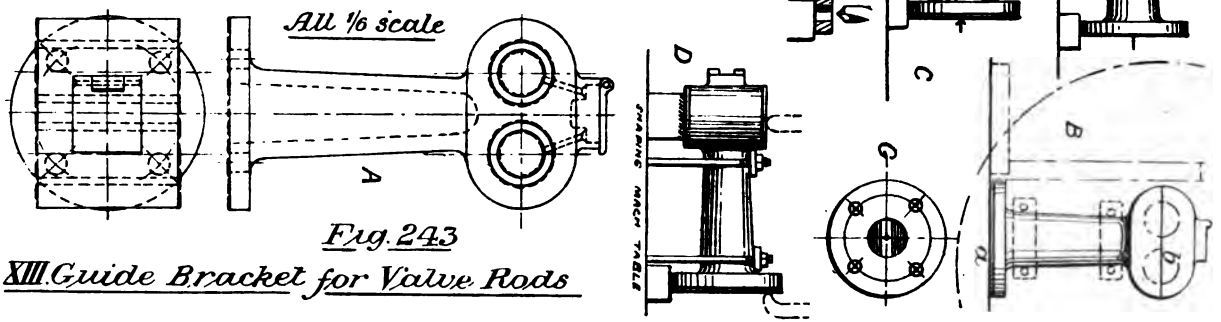

Fig. 243

XIII. Guide Bracket for Valve Rods

Digitized by Google

slipped on to the shaft lengthwise. But there are many cases where it is necessary that the sheave should be in halves for this purpose, and the machining would be then performed in a very similar manner to the eccentric straps to be described, namely, by bolting together the halves before turning. The drawing of the sheave is shown at A. Lay the casting level on the marking-table, as at A_1, and scribe the various thicknesses; span the hole, as at B, and strike a circle for its diameter. Grip in the dog-chuck, as at C, bore, and surface the projecting boss and the face of the sheave, marking the diameter of the boss in the lathe. As the sheave has to be chucked eccentrically, the face plate must, of course, be balanced. Next reverse, and turn the opposite face of the sheave, this time chucking centrally, as at D, and setting the already turned boss close to the face plate. Lastly, the outer circle is struck out, as at E, by re-bridging the centre, and marking the exact eccentricity on the centre line at *x*, and the work is then bolted to the face plate, as shown at F, each portion of the rim being measured in position, and carefully turned exactly to dimension, because it must be a correct 'working fit' with the strap. The key-way may be slotted out. (*See Appendix 1.*)

The **Straps** (drawn at *a*, Fig. 244) are first marked off, as at A_{11} and B_1 (Fig. 245), with the proper allowance for machining the feet, and the two are then bolted down together to the planing table, as at E_1. The bolt holes are next scribed and squared, as at D_1, the casting lying level on its side, and these are drilled, as at E_1. The thickness of the feet for the front strap being lined at F_1, and the stop for the bolt-head at H, these are cut out, the first with pin drill, as at G (known as 'knifing' or 'face-arboring'), and the second with chisel and file. Now place face to face in the vice, and broach the bolt-holes right through; then, having turned the bolts to a good fit, fasten both straps together. Lay the bolted straps level, as at J, scribe the width, and grip in a dogchuck, as at K, to face both sides, setting carefully for each. Leaving the work in the chuck, examine the outer rim for centrality (for this cannot afterwards be turned), and mark off the inner circle for boring, measuring with callipers and rule as the work proceeds. Remove from the chuck, and scribe the remaining surfaces—*b c d*, as at M, measuring from the turned

Digitized by Google

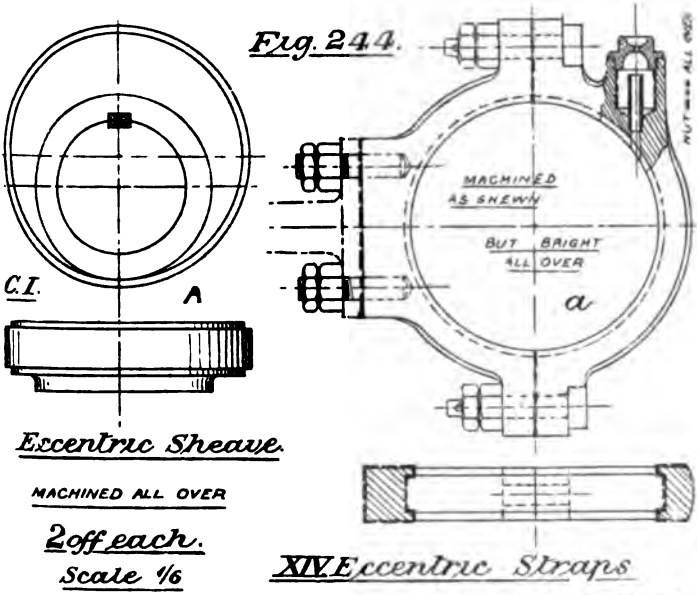

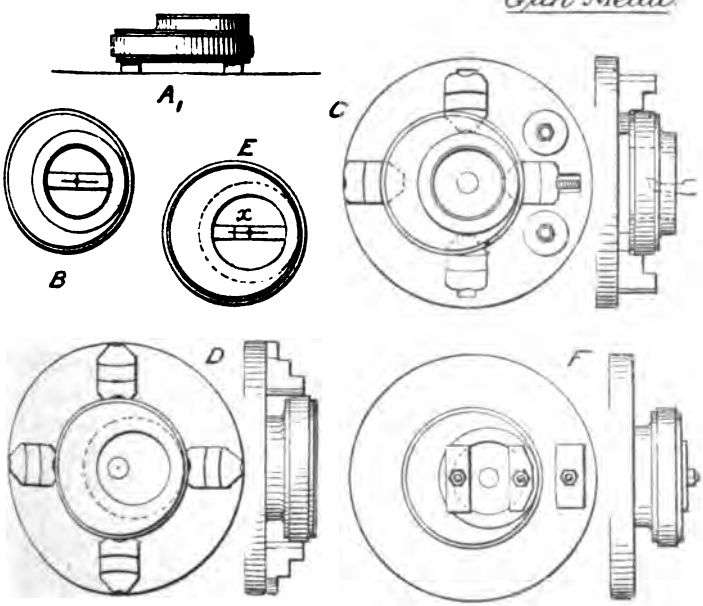

Digitized by Google

circle, and *e*, as at N, with scribing block. Shape the former, or finish by hand, and plane the latter, as at N. Line out the stud holes, as at P, though these are preferably marked, or at least checked, from the already drilled rod. Drill and tap, and bolt to rod to finish off the edges by hand. The oilcup must be drilled and knifed similarly to the cover in Fig. 237, and tapped for the cover nut, after which a short piece of brass tubing is driven in to form the syphon. (*See Appendix I.*)

The **Oilcup Cover Nut** is an example of simple turning and screwing in a universal chuck, the hexagon sides being milled.

XV. Slide Bars are clamped at sides and end, as at E, Fig. 237, and the back surface planed, as at A, Fig. 246. They are then turned over to the position B to machine the front edges. The width of the groove, being marked, is taken out to correct depth, finishing the surface with a flat-pointed tool, and the corners with a 'knifing' tool. The sides of the bars are planed in a similar manner. The ends are shaped to length, and the holes marked off and drilled. Channels near each end are left, in casting, to receive the slide block lubricant, and are now to be cleaned out by hand. After polishing all over, the groove should be scraped to suit the slide blocks.

XVI. Slide Bar Bracket and Distance Piece (Fig. 247).—The bracket is placed upright on the marking table, as at C, and set vertical by trial with square on both sides, measuring as at *a a*. Scribe the thickness of foot, and place upside down on the planing machine, clamping in machine vice; then plane the foot. Now reverse the bracket, and, clamping right side up, mark off the height of the bosses, measuring from the foot, and plane these. Remove, and block up on marking table, as at D and E, and scribe a centre line all round; then measure the positions of the stud-holes, so as to agree with regard to the square bosses. The bolt-holes are to be marked off by setting the casting as at F, and measuring with a square the two dimensions shown, the difference of which will be the distance between stud and bolt centres. Punch and drill the bolt-holes to clearance, and the stud holes to tapping size. Finally, tap the latter.

The **Distance Piece** is a simple example of shaping, which done, the hole is marked off and drilled to gauge.

Digitized by Google

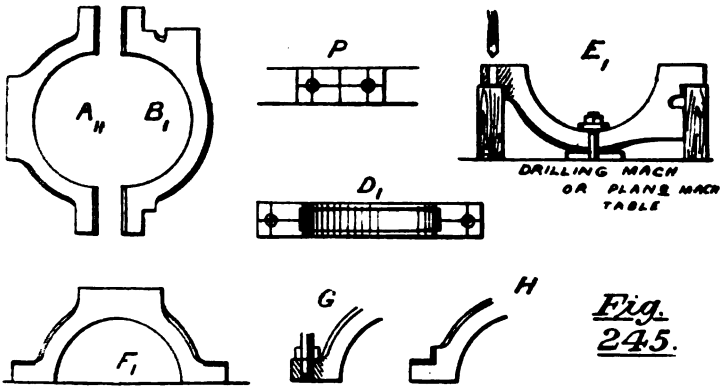

Fig. 245.

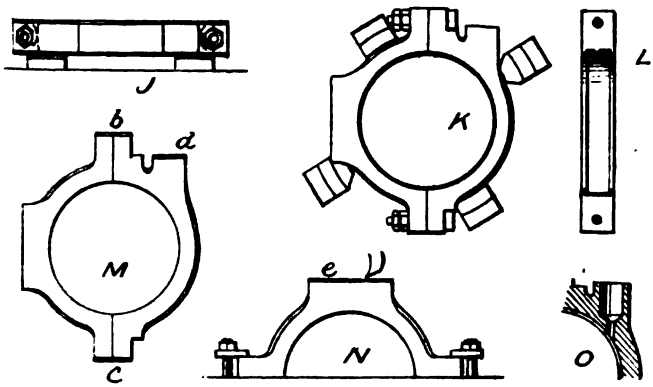

XIVa. Eccentric Straps. (continued)

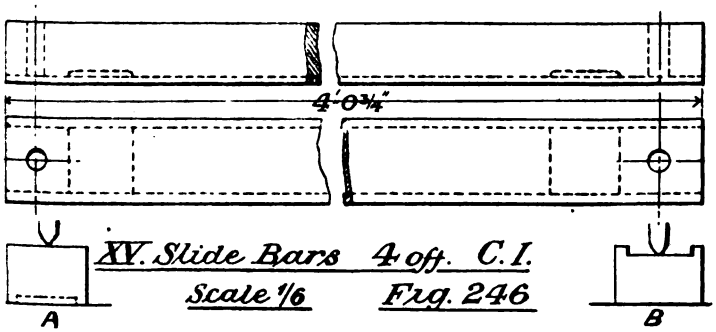

XV. Slide Bars 4 off. C.I.

Scale 1/6 Fig. 246

Digitized by Google

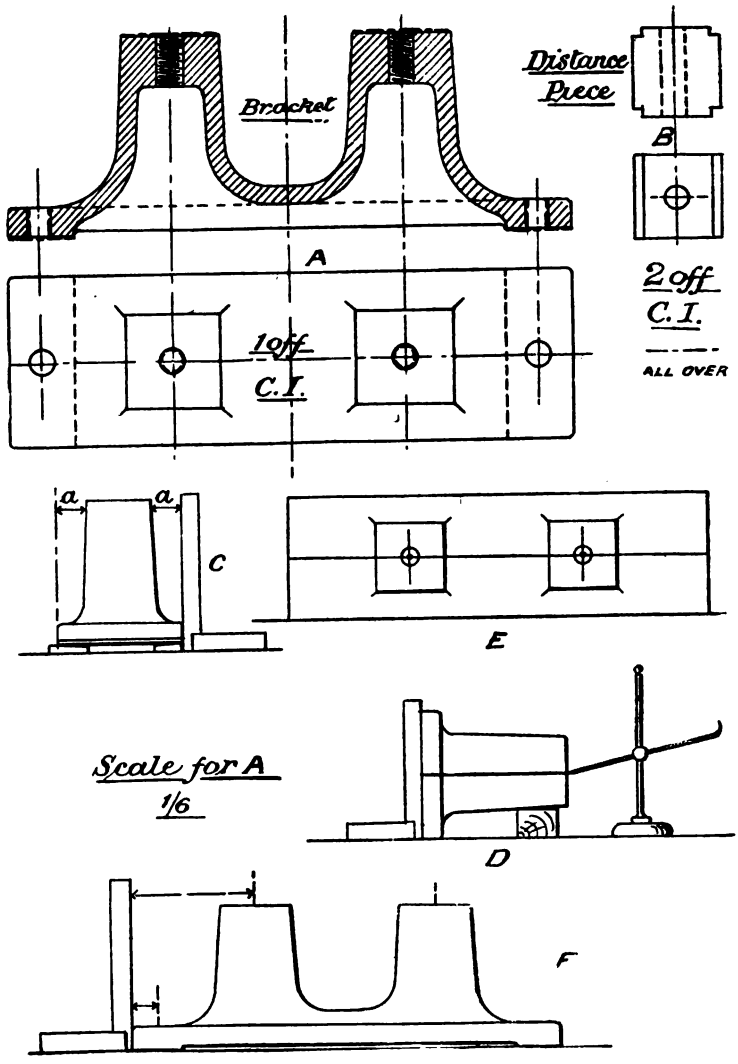

XVI. Bracket and Distance Piece for Slide Bars.

Fig. 247.

Digitized by Google

XVII. Crank Shaft Bearing (Fig. 248). The bearing is first laid level on its side as at B, the centre line obtained, and scribed round. The seatings for the brasses are measured and also scribed, after which the bearing is set up as at C (see both views), and adjusted by line and square till plumb. The foot is next lined, and the top of the bearing taken from this, making sure that there is sufficient stuff left in the bush socket. Now plane in turn the seating sides, the foot bottom, and the top. Stand the casting again on the marking table as at D, and find the centre of the socket. Square this up, as well as the socket sides. Scribe the bottom of the socket, measuring from the foot, and line the bearing centre all round. Square these lines across as in plan at E, and mark them on the opposite side. Find the centre of the set screw-holes, and measure the foot bolt-holes from the vertical centre line. Plane out the bush socket—the sides with a side tool, and the bottom with a front tool, finishing with a flat tool, and the corners with the 'corner' tool shown at F. Drill the holes.

The **Cap** or 'keep' is set on edge to line the seatings and scribe the two bolt-holes and oil-holes, as at G, being first, however, planed to thickness on its bottom surface. After planing also the seatings, and drilling the holes, it is placed in position on the top of the bearings, and the bolt-holes marked through to the latter. These are next drilled and tapped, and the studs put in place.

The **Brasses** are shown in Fig. 249. Being first laid on its side, as at A, the large brass has its width marked and its lips lined for thickness, and is then planed. The front and sides are next lined out on all surfaces to dimensions, measuring from the planed surface, and trying for depth of stuff between the lips, the brass being meanwhile packed with sides truly vertical, as at B. The whole is now planed by clamping in the successive positions, C, D, and E, so that every surface is done, either with a side or front or knife tool, the depth of the middle surface being gauged from the lip; and the small brass F is similarly treated. (*See App. I.*)

The packing plates are next machined, and all is ready to put together. The brasses and packing are to be carefully smooth-filed and scraped until they bed perfectly into their places in the

Digitized by Google

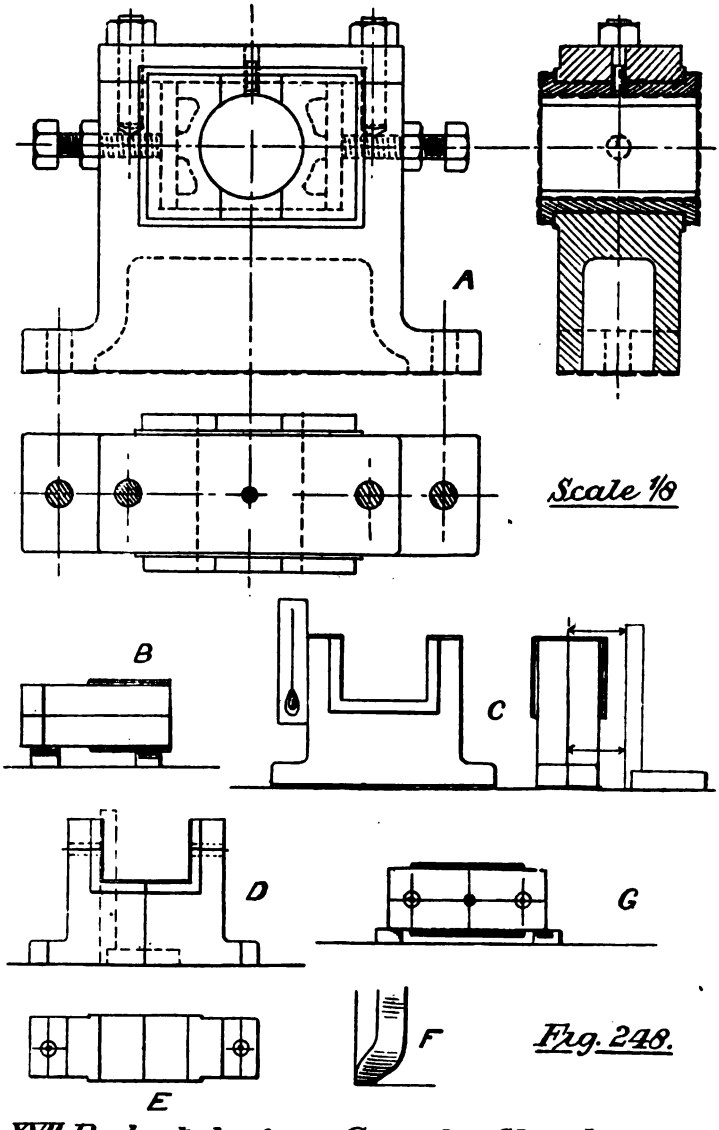

Scale 1/8

Fig. 248.

XVII. Pedestal for Crank Shaft.

2 off. C. Iron. Steps. Gunmetal.

Digitized by Google

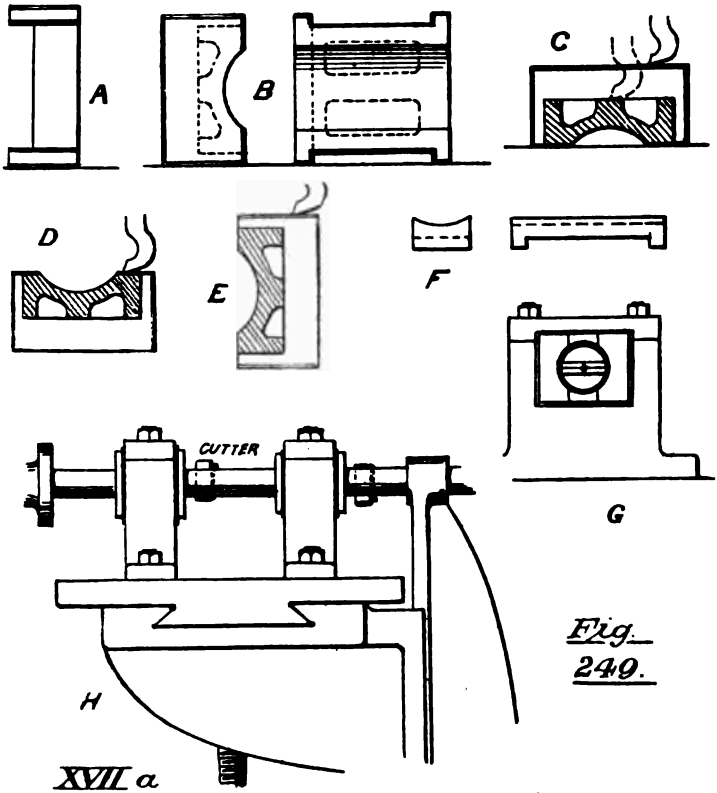

Fig. 249.

XVII a
Crank Shaft Pedestal. (contd)

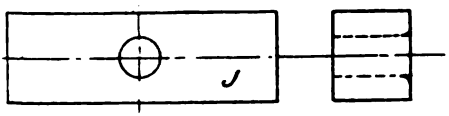

XVIII
Slide Blocks
2 off. C.I.

Scale ½. Machined all over.

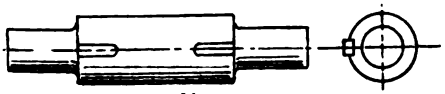

XIX.
Gudgeon.
1 off W.I.

Fig. 250.

Digitized by Google

bearing, and until their top surfaces and the main casting are all perfectly level. Put on the cap and fasten down, span the bush-hole, scribe the centre at the proper height, and strike the shaft circle. Then bolt both bearings, thus complete, to the table of a Horizontal Boring Machine of the lathe pattern (as mentioned in Chapter V.). First see that they lie truly at right angles to the centre line, after which raise the table by the screw, and traverse across until the boring bar can be passed through and the cutters (of correct radius) be put in place. A final adjustment is then given to the scribed lines, and the boring may proceed.

XVIII. Slide Blocks (Fig. 250) are planed or shaped and afterwards lathe-bored to suit the gudgeon.

XIX. Gudgeon (Fig. 250).—This is centred and turned, the corner curve being taken out with a tool ground to suit. It is afterwards laid level in V blocks, and the centre scribed round for the key-ways. These are then taken out in a slot-drilling machine, as at H, Fig. 251. Polish the work as usual, and gauge with ring gauges.

XX. Crank Shaft (Fig. 251).—The forging has been already described at page 123. The marker-off first centres the ends by setting the shaft on V blocks, and then tries with scriber and straight edge to see if there is sufficient stuff right through; if very far out, it should be sent back to the forge to straighten. Punch and countersink. Provide large wing pieces of the shape shown at C, bored so as to freely slip over the shaft. Place the latter in the position shown at E, supporting on packing and V blocks. A countersink having been already formed in the wings at a distance *b* equal to the throw of the crank, this has to be adjusted until in line with the crank pin, by measuring from the double plumb line at *a a*, and by setting plumb the crank web as at D. Then the set screws are tightened firmly on to the shaft, with packing strips underneath of such thickness as to adjust to the distance *b* with great accuracy. The whole may now be lifted from the blocks so as to admit the strut bolts *d d*, which have their end nuts turned till perfectly rigid. Lift the crank into the lathe, and place the wings between the centres, when the crank pin will of course be also central. The object of the wings will now be seen, for they either entirely or partly

Digitized by Google

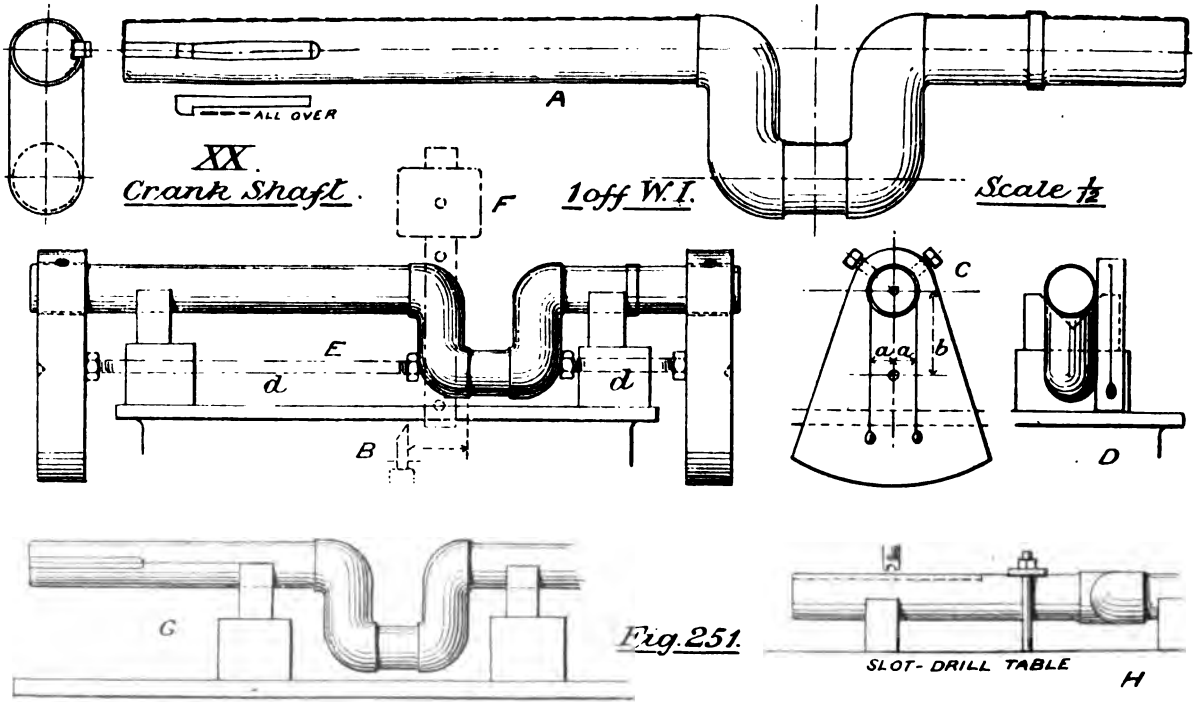

Fig. 251.

Digitized by Google

balance the crank shaft, so that it may be driven by a carrier in the usual way without producing a bad cut underneath the tool. It is advisable to use two carriers instead of the usual pin and carrier, one of them being gripped on the face plate centre and the other to the work, and the two then bolted together so as to produce a rigid driving arrangement. The crank pin is now turned to exact diameter and the width measured, so as to be central between the webs, and finally polished. The forging is next placed in the lathe for turning the shaft portion, with the wings of course removed. The method of measurement may be seen at E, where a tool or scriber is set at the correct distance from the crank pin, and is then traversed over so as to cut or scribe a line for the shaft shoulder. The same is done on the other side of the webs, and the shaft then turned to diameter, gauging with callipers. The length is checked with trammels, or a marked straight edge, and a finishing tool of broad flat form passed over all. Polish with emery, and remove to scribe the key-way as at G, which is milled out by the slot-drilling tool shown at H. During the last turning operation the crank pin may be balanced, if found necessary, by clamping the weight F to the webs, but more often the work is simply driven rigidly without balance. The eccentric key-ways are usually marked by the Erector and cut by hand, or sent back to machine for slot-drilling, and are not therefore shown.

The key at A is planed from good steel, and a taper given of 1 in 64, the fitting to wheel being left to the Erector.

The crank webs should be slightly chipped to remove roughness, filed with rough file, and afterwards painted.

XXI. Connecting Rod (Fig. 252). The large end of the rod is supplied with a strap enclosing the 'butt,' and a gib and cotter for tightening purposes; and the small end is turned 'solid.' The rod is first taken and laid fairly level on the table, as at B. It must be centred for turning by the following method:—Calliper each round end, and let the difference of *a* and *b* be half the difference of the diameters. Then 'feel' and measure both heights at *a*; add together, and halve. Do the same for *b*, and re-adjust till these quantities be the same. Then scribe this dimension, the height of the centre, all round, as

Digitized by Google

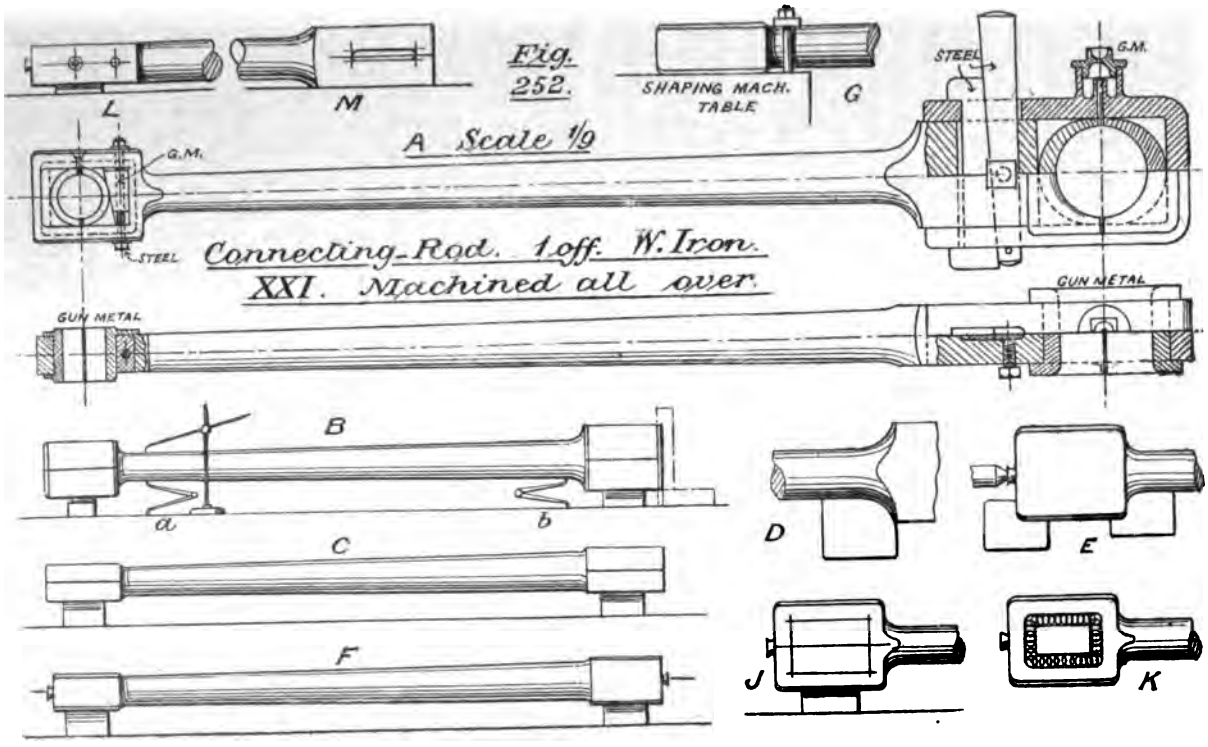

Digitized by Google

shown. Trammel between the shoulders, and square up the vertical lines, as well as the end lines; measured from these. Next lay the rod flat as at C, and scribe the centre line round in a similar manner to the last. Punch centres, and place in lathe, testing with chalk, and square-centreing. Now set the poppet head over by half the diameter difference, and turn the taper portion up to the shoulder radii, as shown at J, Fig. 240. Set the poppet head true again, and surface the ends of the rod, also the shoulders up to the radii. These last require very careful turning. They are to be roughed out by means of a combination of surfacing and traverse feed, and semi-finished by a broad tool ground to the curve, the position of which is gradually changed by turning round the top rest until the whole curve is gone over piece by piece. The last finish is given by hand with the same tool very sharply ground. Of course the work must be continually tried by means of a sheet iron copy called a 'template,' shown at D and E, the lathe being stopped at each trial; and the outer curve of the solid end is to be finished in like manner.

Remove from the lathe, finished, but not polished, and lay on the surface plate as at F, packing till level. Scribe the thickness of the butt and solid end, then fasten, as at G, across a shaping machine having two tables, and shape. Similarly also for the depth. Return to the marking table. Scribe the centre line afresh, and plot out the square hole in solid end as at J; do this on both sides, and well dot all round it. This may now be cut out in one of two ways—(1) a hole may be drilled large enough to pass a slotting tool, by twist drill and pin drill, and the rest of the work done by slotting; (2) a probably better method, is to take out all round by means of slot-drilling tool, drilling, say, a quarter of an inch down, traversing all round as at K, then a little further down, and so on till the hole is completely cut, finishing the sides with a milling cutter and the corners with a corner tool. There is then very little work left for the file.

Now mark off the bolt-holes at L, on both sides of the solid end, together with the oil-hole, and the cotter-hole at M. Drill the bolt-hole from each side, broach through, and countersink the oil-hole. Take out the cotter-hole in slot-drilling machine,

Digitized by Google

as above described, until cut right through, when there ought to be little finishing with file. Drill and tap for set screw in butt end, return the rod to the lathe for polishing, chip off the centreing pieces, draw-file, and polish the ends.

The **Strap** (Fig. 253), being forged fairly to shape, is first scribed to thickness, and planed. A sheet-iron template is next provided of the form shown at N, Fig. 253, which is placed on the forging and the form traced. Finish the contour with vertical mill or slotting-tool, clamping the work as at O for the outer and as at P for the inner tooling. The oil-cup is next marked off as at Q, and the strap clamped to an angle-plate as at R for turning, boring, and drilling. At the same time the screw is chased for the oil-cup cover. Lastly, line out the cotter hole as at S, and slot drill by blocking up in the machine vice as at T, and, on removal, draw-file and polish.

The **Cotter** U is first planed to thickness from good steel, and then marked off to length and width. Both edges are then planed to the marked lines, and the rest finished very exactly by file, with the aid of the gauge template V, great care being taken regarding the thickness.

The **Gib** W is similarly marked out, and the sloping edge planed. The channel is then removed with a shaping tool, several gibs being bolted together for economy, and the rest finished very carefully with the file.

The **Large Brasses** are marked off and planed in the same way as were those for the bearing, Fig. 249, and are then bolted down very firmly to the boring table as at X, with liners between to represent the draw of the cotter, and with bolts lying close up to the outer surfaces. See their faces are set at right angles to the boring bar, which is inserted as before, and the work traversed into position. Bore right through, and finish the radii with a specially ground tool, as at Y.

The **Small Brasses** are shown at *d* and Z. They are planed as before, with the exception of the sloping side, which requires a new setting, as shown at *e*, and is planed with a side tool. The 'ring' faces must also be left untouched, these being turned at the same time as the hole is bored, which is done by bolting the two brasses together, with a wedge between for the

Digitized by Google

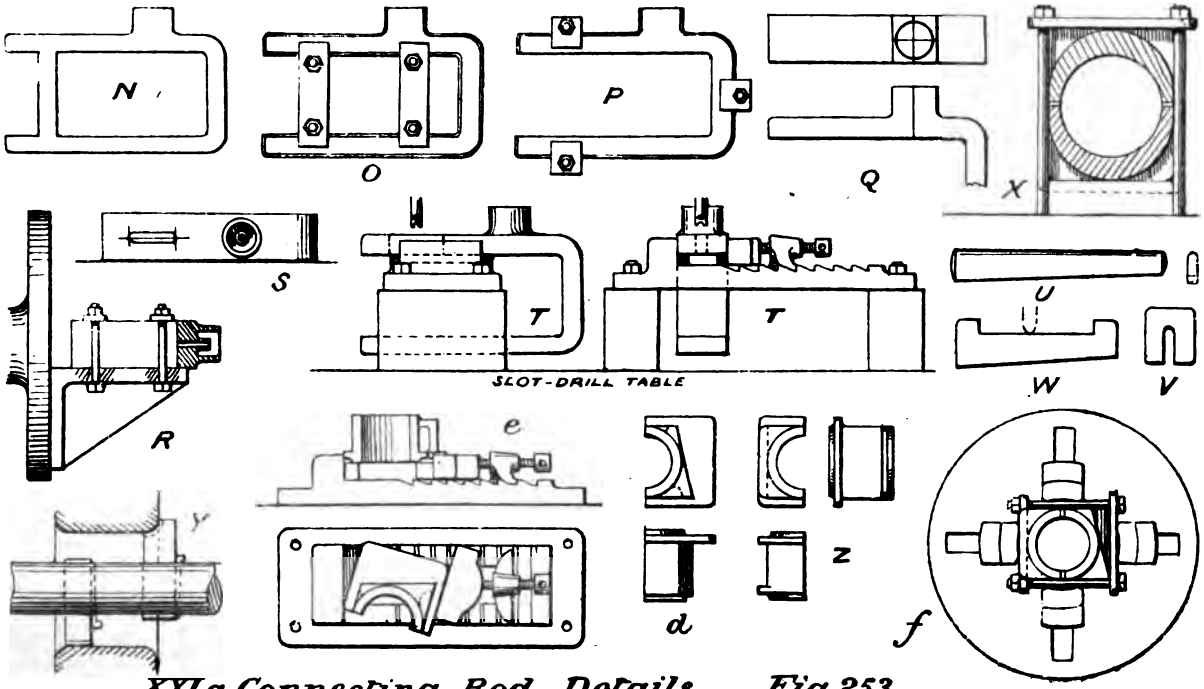

XXIa. Connecting Rod Details. Fig. 253.

Digitized by Google

slant edge, and a liner to represent adjustment allowance, and the whole chucked in the lathe, as at *f*. Two settings are of course necessary. (*See Appendix I.*)

The **Wedge** is now shaped to dimension, but not drilled; the wedge bolt and set screw for the large end both prepared. The oil-cup cover is then turned and screwed in a concentric chuck, and milled on the hexagonal faces with a horizontal tool by placing the work on a dividing plate. All is now ready to put together. For the small end, fit the brasses in place by smooth filing and scraping; fit the wedge, and mark off the hole for bolt by scribing through the rod end. Remove wedge for drilling and tapping, then replace. For the large end, the gib and cotter are first carefully fitted to their holes separately; then the brasses are fitted to the strap, and the latter to the butt end. Place all together, and file the cotter till it enters the proper amount; then mark off the split-pin hole and drill. Once more replace all parts, and the connecting rod is complete.

XXII. Crosshead (Fig. 254).—Centre the forging, as at B, and line the width across the cheeks; then turn the side and end, and shape the flats. Lay now upon the marking table, as at C (see both views), and scribe the horizontal centre line. Find the centre for the gudgeon hole, as at *a* and *b*, measuring from a straight edge, and test also with dividers; erect this line with square, and strike the circle on both sides, also the contour of the boss. Chuck in the lathe, as at L, and bore the hole, first drilling to admit the boring tool. Remove from the dogs, and insert next in a large bell-chuck, as at D, the exact position being found by placing the work between the lathe centres; afterwards firmly tightening up the screws, as shown. First drill the hole as large as allowable, the tool being centred, as at F, and clamped in the slide rest; and next bore the taper, as at E, by turning the top slide of the rest to the required angle, the feed being obtained by a small pulley on the screw, driven from the countershaft by catgut band. The hole is tested for diameter with callipers, and the angle of the rest noticed before removing (this being afterwards required for the Piston Rod). Now place the crosshead on the mandrel of a shaping machine, as at G, and shape all round up to the return curve, the latter being tooled with a

Digitized by Google

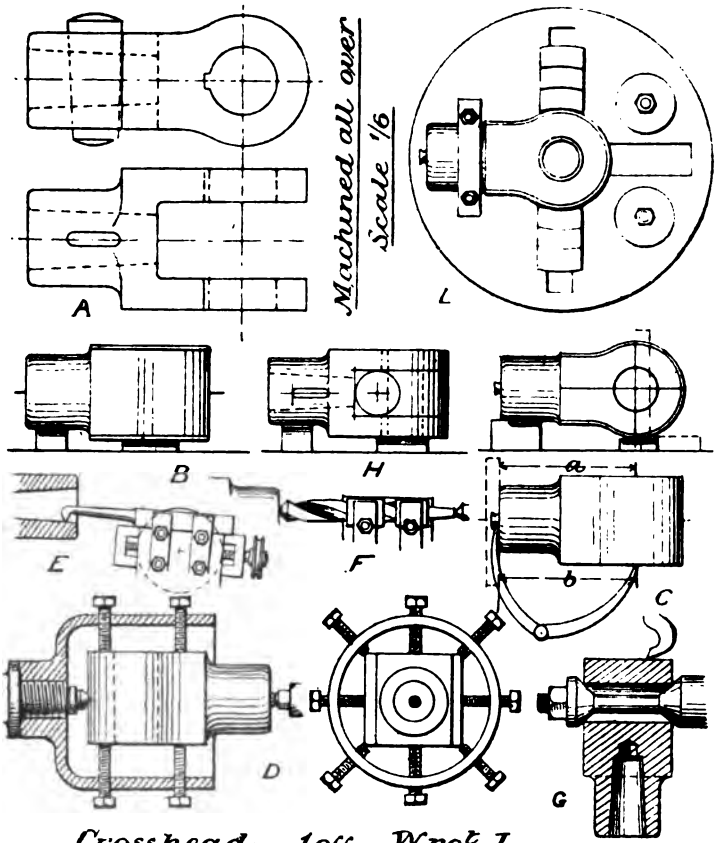

Crosshead. 1 off. Wrot I.

XXII Fig. 254.

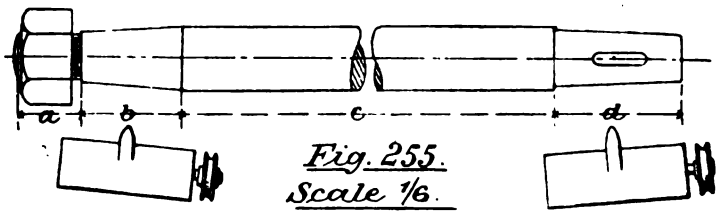

Fig. 255.
Scale 1/6.

XXIII Piston Rod. 1 off. Forged Steel.
Machined all over

Digitized by Google

concave feed (mentioned in Chap. V.), and the flat portion with horizontal feed. Take again to marking table, block level, as at H, and scribe both fork and slot-hole, measuring from shoulder. Drill and slot the fork, and slot-drill the cotter hole. Finally, slot out the key way to suit the gudgeon; prepare a cotter, and take out the taper in the hole with round file; then draw-file and polish. (*See Appendix I.*)

XXIII. Piston Rod (Fig. 255).—Centre on V blocks, and set in the lathe. Then traverse all over the work to the diameter at *c*. Mark off the various lengths *a*, *b*, *c*, *d*, and put a centre pop at each place. Turn down *d* to the larger diameter, and take down the taper at *b* and *d* by setting the slide rest, as at E (Fig. 254), and it should be noticed that if the rest be placed at the same angle both for rod and hole, the one is bound to accurately fit within the other. Turn down at *a* to screwing size, and chase; then finish and polish the whole.

The *Nut* may be turned, bored, and screwed in a chuck, and the hexagon milled. Lastly, the rod is fitted into the crosshead, and the cotter hole marked through to the latter, then slot-drilled, and finished with file.

XXIV. Piston (Fig. 256).—This is to be turned on the rim, and bored to fit the piston rod. The latter operation is done at B, and the former upon a taper mandrel at C, the grooves being turned at the same time to exact gauge, so as to fit the rings as truly as is consistent with freedom. The plug holes, *b*, left during casting (see B, p. 30) are to be drilled and tapped, centres unimportant, the plugs being made from a round bar, screwed in the lathe and parted off to length. They may be an easy fit in the holes, but must be painted with sal-ammoniac, so as to form a rust joint.

The rings are rolled from ¼-inch brass bar, being received at the works ready formed, sprung out to a somewhat larger diameter than the cylinder. The joint is shown at *a* (Fig. 256), and should be as nearly as possible closed when the piston is in place.

XXV. Radius Link (Fig. 257).—The forging should be fairly to shape, being made to template. First line to thickness, and plane. Make a template exactly to drawing A, with the exception of the holes, which consist of quarter circles, as at B, with

Digitized by Google

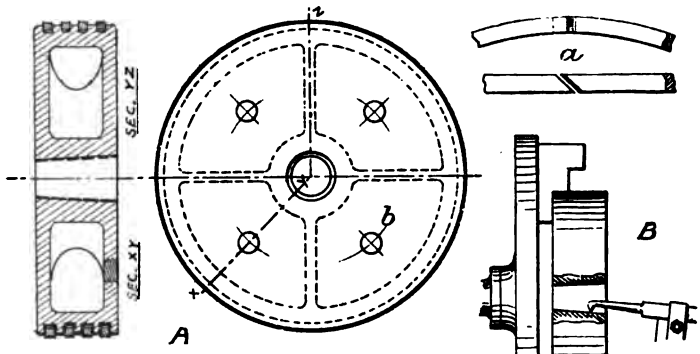

Scale 1/8

Fig. 256.

XXIV.

Piston. 1 off. Cast Iron.

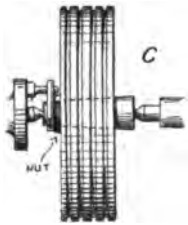

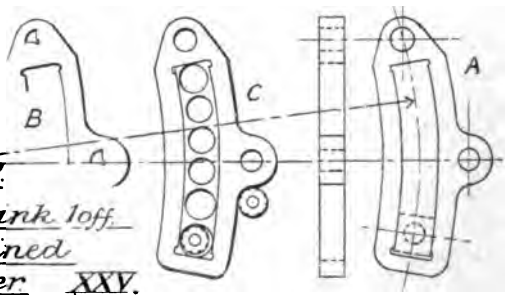

Scale 1/8

Fig. 257.

Radius Link. 1 off.

W.I. Machined all over.

XXV.

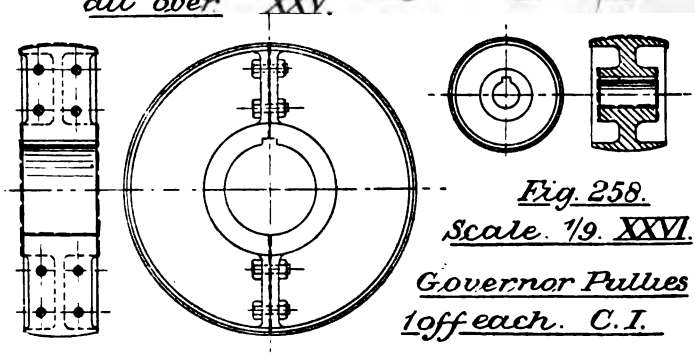

Fig. 258.

Scale. 1/9. XXVI.

Governor Pullies

1 off each. C.I.

Digitized by Google

a little piece filed out at the centre to admit the scriber. Lay this template on the work, and trace out. Then drill the holes, which are to be broached when all the parts are put together. Remove all the outside material with a vertical milling tool having a radius equal to that of the return curves, as shown at C. The inner slot may be cut out by one of three methods: (1) Let several holes be drilled, as at C, one large enough to take a slotting tool, and slot all round with hand feed; (2) Drill a hole to take a vertical milling tool, shown at C, and a few more holes to save the cutter, and mill out the rest, traversing by hand, first one side and then the other; (3) best of all, is the same as the last, with this exception: the cutter is held in a special form of vertical mill, called a 'profiling' machine. Here the bearing carrying the vertical spindle may be made to traverse any particular curve by applying to it a copy of the same shape, and its action is thus similar to that of the copying lathe. The curve would thus be finished right off without further filing; and the ends may be taken out with a double corner tool, then finished by hand. The die (Fig. 242) is ultimately fitted to the link by careful filing and scraping, and both link and die (after broaching the former) are case-hardened. (*See Appendices I. and II.*)

XXVI. Governor Pullies (Fig. 258).—These are to be machined as shown upon the drawings. The bosses are to be bored by chucking in a dog-chuck, and the facing both of boss and rim done at the same time. Two settings are, of course, necessary. Next put the small pulley on a plain mandrel, and the large pulley on an expanding mandrel, as shown at page 155, and turn the rim surface in each case with parallel traverse: then finish the curve with a hand tool. The large pulley being in halves must first be planed on its joint surface, as in the case of the eccentric straps at Fig. 245, then drilled for the bolt-holes, and bolted together for boring. The keys are lastly taken out by slotting.

XXVII. Governor Bracket (Figs. 259–60).—This is a rather more difficult example of lining out, but involves no new principle, the only precaution of importance being very careful levelling at every operation. The casting is laid on its side, as in the two views at B, and adjusted until the bush centres are of the

Digitized by Google

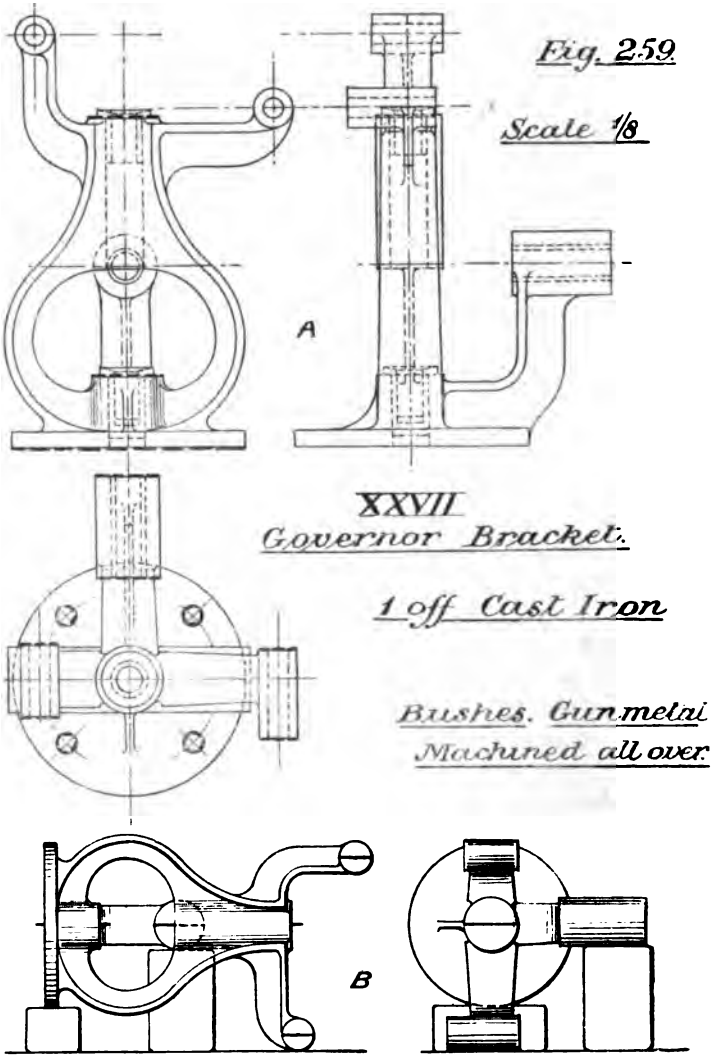

same height. The three bosses are next tried on each of their ends until as nearly level as possible. No doubt the casting will be

Digitized by Google

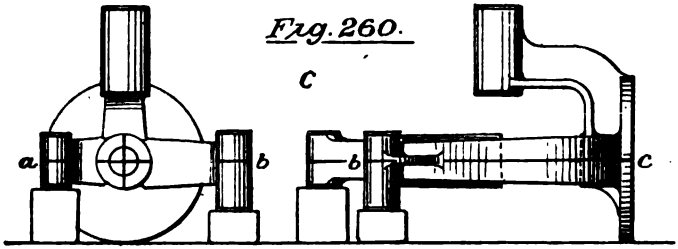

Fig. 260.

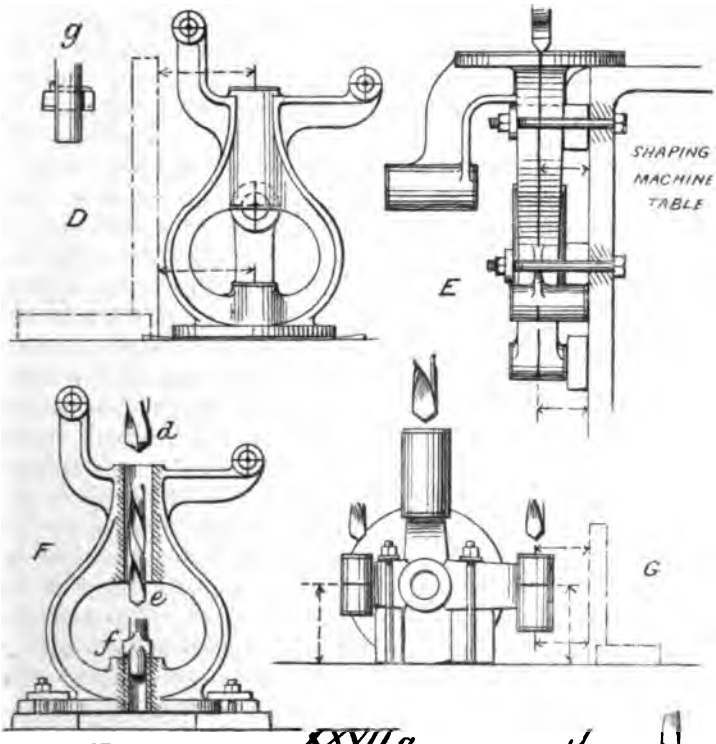

XXVII a.
Governor
Bracket
(continued)

Digitized by Google

somewhat warped, and absolute perfection therefore unattainable, so there must be a sort of 'give and take' until the best condition is obtained. Scribe centres of bosses and bush holes. Now lay the bracket on its other side, as in the two views at C, Fig. 260, and again adjust the bush centres horizontally. Test the three bosses until plumb, and the cross line for being fairly level; then scribe a centre line round the bosses at *a* and *b*, and along the casting to the foot *c*, which will be afterwards useful for setting purposes. Scribe also the centre of bush-holes and the lengths of the bosses, measured from *a* and *b*. Set the casting vertical as at D by trial with square, packing at the foot, and scribe the bosses. Then reckon from the boss centres, and scribe the thickness of the foot and the heights of the bush surfaces. Centre-pop everything before passing on to the machines; then shape the foot by packing vertically, as shown at E, clamping to the side of the table. This done, remove and clamp to the drill table as at F until the vertical centre is truly plumb, and drill the upper hole to full size with a drill *d*, but do not let the same drill pass through to the lower hole, or the latter might be drilled untruly. Commence the lower hole with a smaller drill *e*, and finish with the pin drill *f* of special shape, and by this means it will be truly central with the top one; knife or face-arbor the top surfaces with the tool shown at *g*. The bracket is now clamped to a radial drill bed, as at G, setting by means of the centre line previously scribed, the holes all drilled to finishing size, and the top surfaces knifed. The work must then be reversed to knife the bottom surfaces, but not specially clamped this time, for the holes themselves will be sufficient guide. The bolt-holes may next be marked as at H by blocking the bush-hole, scribing and squaring. The bolt circle is then struck, each angle bisected, and the holes drilled at J, supporting the work on blocks. The top bush for the pulley spindle is simply drilled, and afterwards turned on a mandrel, then driven into its boss with a lead hammer. The lower bush is also placed on a mandrel for turning, but having a blind hole must be centred on V blocks.

XXVIII. Governor Details. — The various parts are shown at Fig. 261, and will be taken *seriatim*.

The **Spindle** A is first centred, turned, and screwed, and the

Digitized by Google

flat cheeks lined out. These being shaped, the boss is next marked off and milled, and the hole drilled, the slot taken out as in previous cases, finishing by hand. The key for the mitre wheel is finally grooved with a milling cutter. The **Sleeve** B, being cast solid, is first centred, and the thickness of the bosses lined. It is drilled in the lathe, and then slipped over a mandrel to turn, and to screw the end. The flat surfaces of the bosses are next shaped across, and the space between taken out with a tool of the exact width. The holes are marked off and drilled, and the bosses filed round, after which the sleeve is fitted to the arms C by chipping out the socket with cross-cut chisel and finishing with a curved file much used by brass finishers, called a 'riffler' (see Q, Fig. 262). Mark out key-way for the weight E, and cut the same by hand.

The **Nut** for the sleeve is bored and screwed in a chuck, and turned on a mandrel, and the octagon milled by fixing on a dividing circle. Drill and tap for the side screw, but only file out the corresponding slot in the sleeve after M is put into place, and the nut advanced to give the requisite tightness. The **Lower Arm** C is packed up as at H, Fig. 262, and the fork bridged; then the centre and the flat cheeks are lined, the fork centres struck, the lengths marked off, and the centres of the bosses squared up. Next turn the shank, and slot or mill the fork to the marked lines. Lay the arm in the position J, and after scribing the centre line, strike the curves of the bosses and pin-holes, and scribe the width of the fork. Shape and mill to the lines, and drill the holes. The **Radius Arm** D is centred and lined as at K, Fig. 262, and the shoulder line marked off, as well as the commencement of the small curve to ball. Set in the lathe, and turn down the shank. Then prepare a template for the ball, as shown at L, Fig. 262. First turn to diameter as a cylinder, and surface the end to length; then feed at 45°, as at *g*, Fig. 262; continue to halve these angular feeds until the ball is approximately spherical, as tried with template, and finish with a keen hand tool ground to the ball curvature. Mark the centre of the ball while revolving in the lathe, and set on marking-table to get the cross centre, as at M, Fig. 262. The boss is then finished as usual, and the hole drilled through the ball. The

Digitized by Google

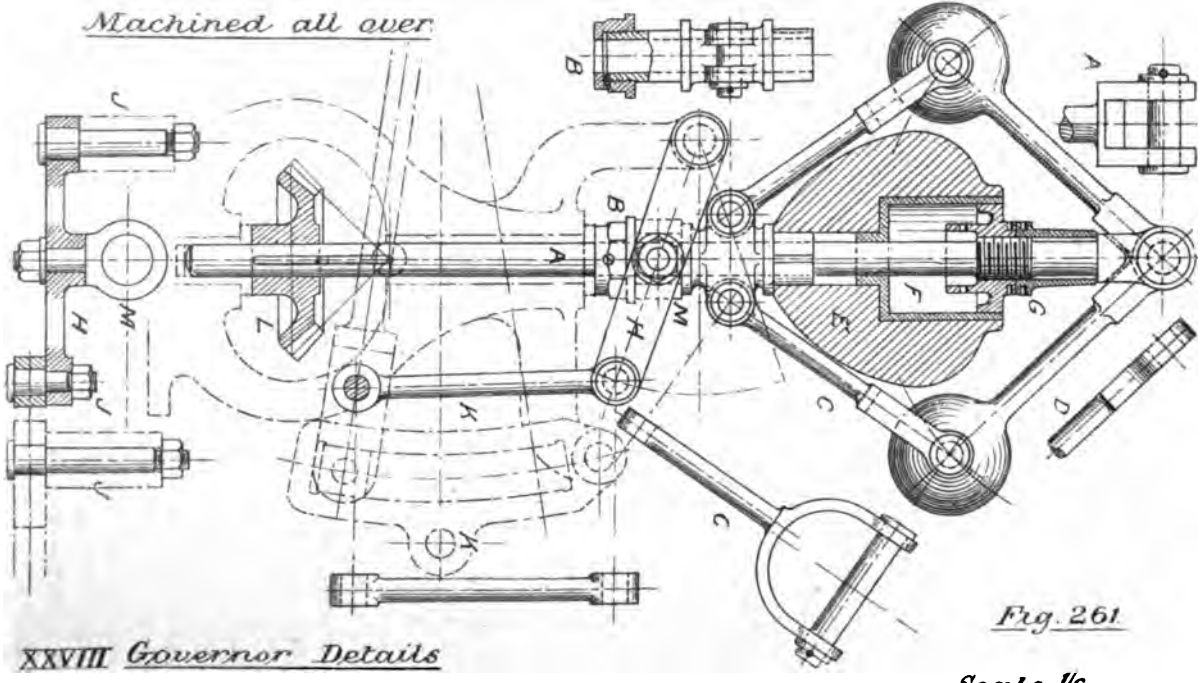

Frg. 261

XXVIII Governor Details

1 set off: complete.

Scale 1/6

Digitized by Google

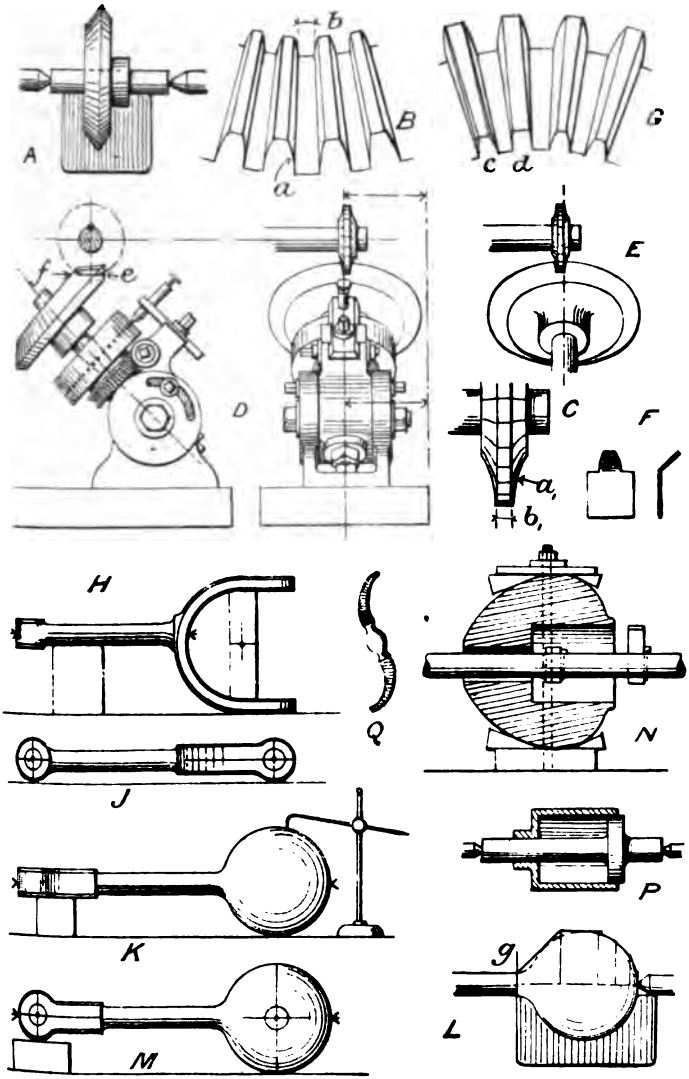

Governor details (continued)
XXVIII a. Fig. 262.

Digitized by Google

Central Weight E is fastened to the table of a horizontal boring machine, as shown at N, Fig. 262, and bored with cutters of correct radius. It is next put on a mandrel fitting the smaller hole, and the outside turned to template. First the ends are faced, then the diameter turned as a cylinder, and the rest is obtained by various angular feeds, finishing by hand. The key-way for fastening to sleeve B is to be slotted. The **Bush** F for the weight, is to be bored in a chuck, and then turned on a special mandrel, shown at P, Fig. 262, being afterwards driven tightly into the weight by means of a copper hammer. The **Nuts** and **Guard** G are first bored, and afterwards turned on a mandrel, being replaced in the chuck for screwing. The tooling of the **Lever** H may be understood by reference to the regulator lever No. I., and the studs J J are all examples of simple turning and screwing. The **Lifting Link** K, and the **Lifting Eye** M, need no special description. (*See Appendices I. and II.*)

We now come to the **Mitre Wheels** L. For the machining of these we may again refer to Fig. 262. Both wheels are made of gun-metal and are exactly alike, boss included. After boring truly they are placed on a mandrel, and the 'blank' turned as at A to a template which has been previously made with great care. The teeth are then to be cut by means of a milling cutter. A mandrel is provided which fits into the socket of the dividing centre shown at D, and the wheel set at such an angle that the *lower* line of the tooth, *e f*, is horizontal. Looking in front of the wheel, the work must be set so that one *edge* of the milling cutter is in line with the centre. The radius a_1 of the cutter at C being made to fit the curve *a* of the larger end of the tooth, as shown at B, and the width b_1 of the bottom of the cutter made equal to *b* at the narrow end of the teeth, a little consideration will show that the cutter will trim up one side of the tooth in such a way that the smaller ends of the teeth *d* will be a little too wide at this point, as shown at G. After all the spaces have been cut out as at D and *one* side of the tooth, the work is traversed forward and the other face cut as at E, after which the taper C of the teeth is lined out as at G, using (1) a straight edge of the form shown at F, page 62; and (2) a template F, Fig. 262. These surfaces are then dressed off with the file. (*See Appendices I. and II.*)

Digitized by Google

XXIX. Steam Cylinder (Fig. 263).—The various operations are shown at Fig. 264. The ends are first bridged, and the centre found by reference to the outer curve of the cylinder flange. Mark temporarily the height of the centre B. Adjust until the top of the cylinder foot is fairly level, giving and taking with the three centres at A and B. Scribe the horizontal centre line, B B, all round, and square up the vertical line, C C; then strike the circle D for boring. Line the heights of the steam and exhaust flanges at E, and scribe the thickness of the foot at F; line also the thickness G of the bosses for the bolts. Scribe the height of the valve-guide H, using a special piece of bent wire for the scriber as shown, and mark the heights, J, of the indicator bosses.

Set the cylinder upside down, as at M, and plane the foot. Set upright, as at N, and plane the steam and exhaust flanges, the indicator bosses, and the foot bosses. Now clamp between angle plates on the planing machine as at P, and if these be true vertically (as they should be) there will be no difficulty in packing correctly; but if not, some care must be exercised, and in any case the centre of the cylinder must be levelled longitudinally. Scribe the steam chest face to correct distance from cylinder centre, and plane with a front tool, P. At the same setting the valve face may be planed at Q with long, strong side tools, right and left, and the valve-guide also finished.

The cylinder must next be bored. This is done by packing up, as at K, on a horizontal boring machine of the type described on page 161, but of a smaller pattern. Bore right through, and face the flanges by first measuring through the cylinder, as at L, so as to leave an equal amount of seating on each flange; then alter the tool to take out the bell mouth or larger diameter at each end. Set the casting on end, as at O, and plane the stuffing-box seatings so as to be level with the cover seating.

All the main faces are now machined, and the rest of the lining may be done. At V the inner square is scribed on the steam chest face, measuring from the horizontal and vertical centres, the latter being squared up with reference to the outer edge of the flange. Take the material out by hand, or by slotting tool, very probably the former. The steam chest cover may be

Digitized by Google

XXIX.

Cylinder for Horizontal Engine. 1off. C.I.

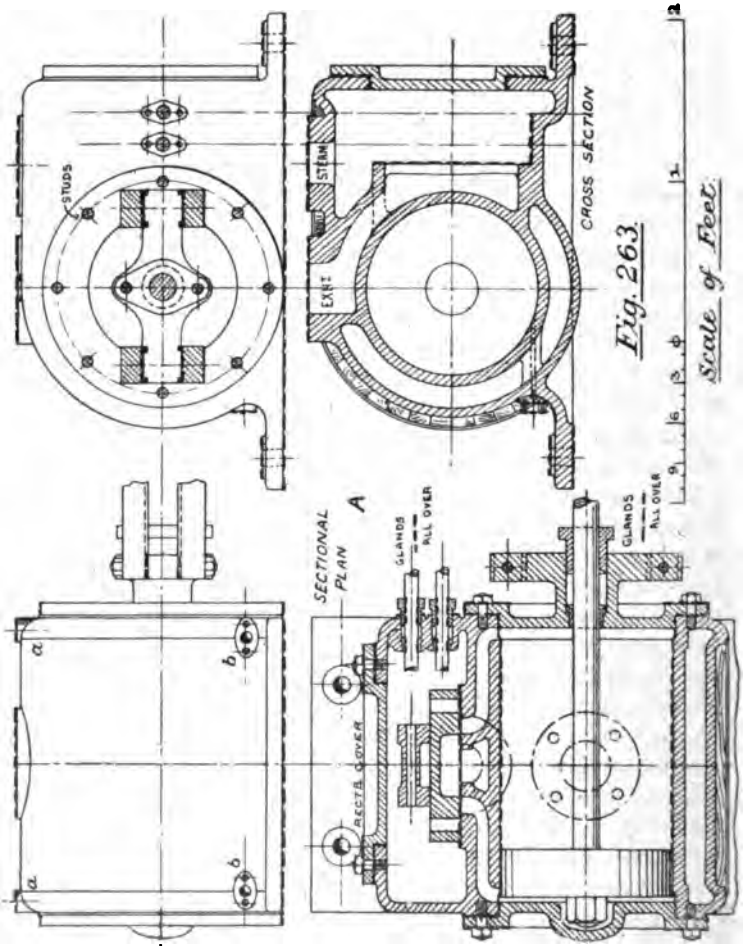

planed in the same manner as the cover at Fig. 237, and the holes drilled. It may then be fitted to its place on the cylinder, and he holes scribed through, as at v, and centred. After the front and back cylinder covers have been finished (next example),

Digitized by Google

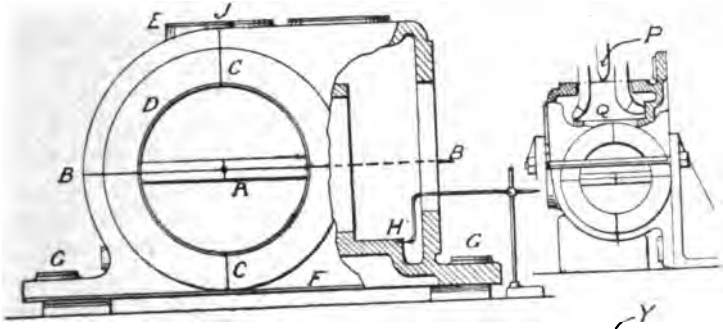

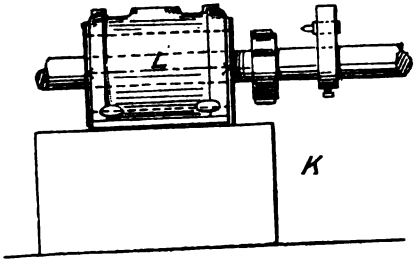

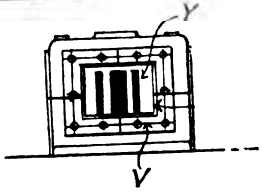

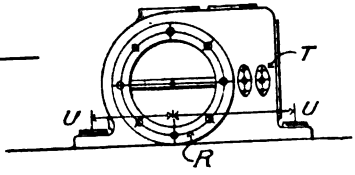

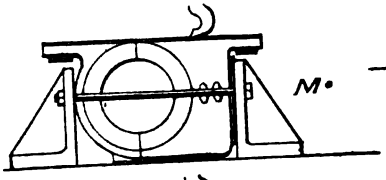

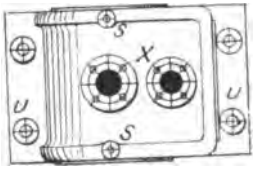

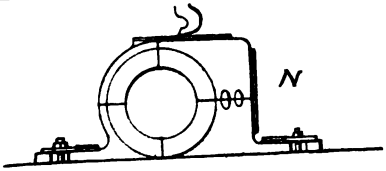

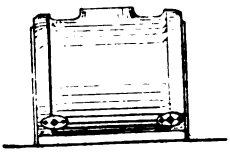

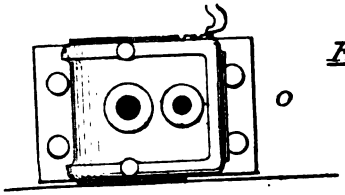

Fig. 264.

Steam Cylinder
(continued) XXIXa

Digitized by Google

they may in like manner be fitted to the cylinder, and the stud holes marked off (R), both covers being blocked level during the marking off. Span the steam and exhaust flanges, and divide out their bolt centres (X) according to the flange circles; strike out also the indicator bosses S. Mark off the bolt holes for cylinder foot, as at U U, by measuring from the cylinder centre to a straight-edge lying across two of them, and otherwise from the cylinder fronts, giving and taking with the centres of the bosses as cast. Scribe the centres of the stuffing boxes and their studs, as at T, and square the same from the cylinder centre. Mark the central holes in cylinder cock bosses according to their position as cast (see W); the stud holes are better marked from the cocks themselves. For the ports a template is provided, and nicked at the centre lines, so that it may be accurately placed in position. The horizontal centre is scribed on the port-face, the vertical centre squared up from the face H, as measured from the stuffing box face after boring; the template is then applied, and the ports traced through.

Now set the cylinder under a radial drill, so as to drill all the stud holes in the various flanges to tapping size, and tap them, either by hand or by machine.

The indicator bosses have a small hole drilled first, are pin-drilled afterwards, half way down, to tapping size, and knifed on their top surfaces, then finally tapped. The drain-cock bosses are treated in like manner, and the cylinder foot bolt holes knifed on their top surfaces after drilling. Next mark the studs for drain cocks and valve spindle stuffing boxes, the latter as in Fig. 237. Chip the edges of the steam ports to the marked lines, and scrape the face. Then put in all the cover studs with stud box, and bolt on the covers to try the fit.

XXX. Cylinder Covers (Fig. 265).—The front cover is chucked, as at A, until the stuffing-box face be true, for this face is not to be tooled. Set the tool to correct distance from centre, and turn the rim. Clean up also the front of the cover, measuring from the slide bar bracket, and mark off the thickness of the flange, and the circle for the stud holes. If cored, proceed to bore; if not, drill first, and bore afterwards to diameters given, first right through with the smaller hole, and next the larger hole

Digitized by Google

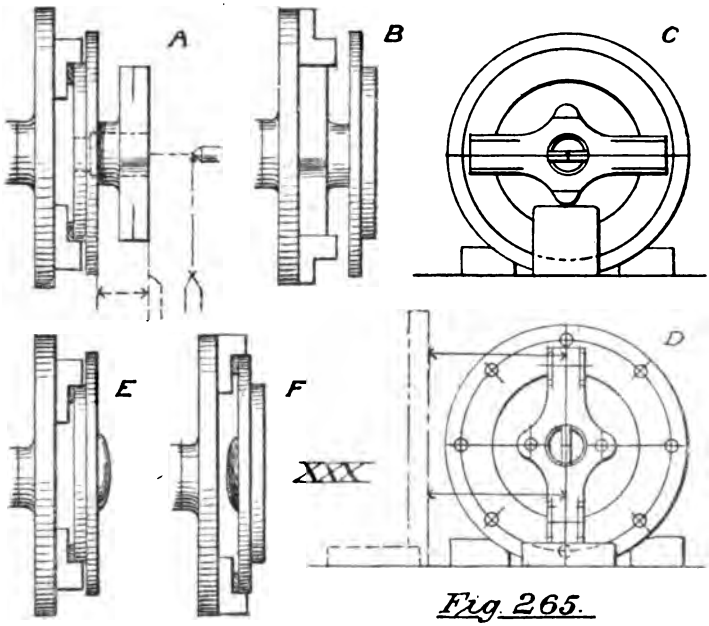

Fig. 265.

Cylinder Covers (continued)

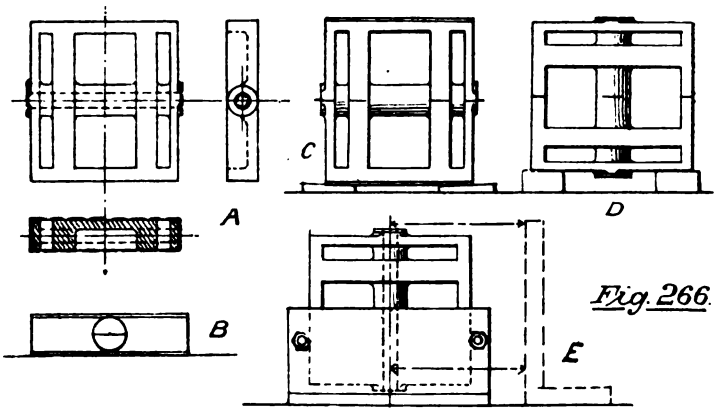

Fig. 266.

XXXI. Main Slide Valve.

1 off Cast Iron.

Digitized by Google

to proper depth. Reverse the work, as at B, and set truly with the turned face. Turn the inner surface and the smaller diameter. Now set the cover, end up, on the marking table, as at C, until the boss is horizontal. Having spanned the hole and found its centre, scribe the centre line along the boss and on to the cover. Scribe also the seating for the slide bars and the centres of the gland studs. Now turn the cover through 90°, by measuring from a square, as at D, and scribe the centre line across. Mark also the slide bar seatings, and divide out the stud holes; then drill the bolts and studs, and slot the slide bar seatings. Lastly, scribe through the stud holes on to the cylinder flanges. The back cover is turned, as at E and F, and similarly marked, and the gland tooled as previously described at Fig. 238.

XXXI. Main Slide Valve (Fig. 266).—Lay horizontal, as at B, scribe centre of boss and thickness of valve, and plane both sides. Set up, as at C, till the bosses are level, and scribe the centre all round; line also the top and bottom surfaces. Turn to the position D till the boss is quite vertical, and scribe the centre line round. From this, line the height of boss at top and bottom. Re-scribe the hole for the spindle at both ends, which is much larger than the valve spindle, to allow for wear of valve. Next set up on an angle plate in the drilling machine, as at E, till vertical, and drill the hole right through, knifing at the same time. Plane the top and bottom surfaces. Line out the ports by means of a template, and finish their edges by hand.

XXXII. Expansion Slide Valve (Fig. 267).—Set level, as at B, and scribe the boss centres and the face. Square up the edge, measuring from the centre, and join this along the top. Next set vertically, as at C, scribe the centre, and line thickness of boss seatings. Drill, knife, and plane as before, finishing the edges to template.

XXXIII. Flywheel (Fig. 268) requires very little description. It is simply bolted centrally by the arms to a large face plate, as shown at A, the boss bored, and both boss and rim faced. It is next reversed, the other side faced, and the rim turned, as in previous similar cases, the curved surface being given by a careful hand feed.

Digitized by Google

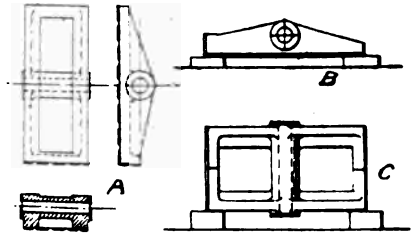

Expansion Slide Valve

1 off Cast Iron

Fig. 267.

XXXII.

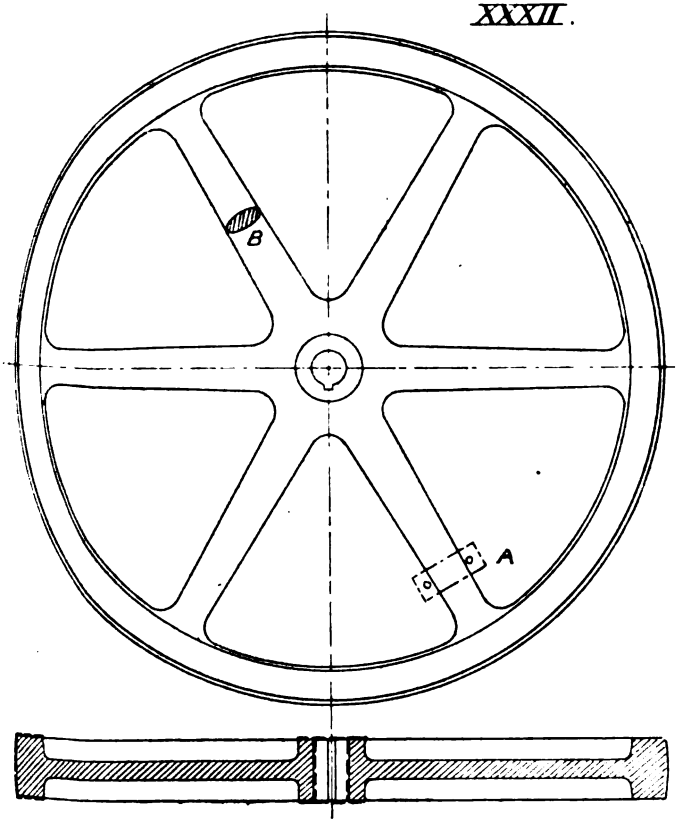

XXXIII. Fly Wheel. 1 off. Cast Iron

Scale 1/24. Fig. 268.

Digitized by Google

XXXIV. Bed Plate (Fig. 269).—This is not too large for a planing machine such as was described at page 169. It is better to plane the under edge, so that the bed may rest more perfectly on the stone or brickwork. The casting is therefore set upside down on the machine, and the ends clamped till the two side edges are planed; the clamping is then removed to the side, and the end edges planed with a short stroke. The bed being now set right way up, and held by its lower rim all round, must next have its seating marked, so as to plane off the calculated allowance (the total depth is not of any consequence). All the seatings will be done at once, with a stroke the whole length of the table. The bolt and stud holes are to be marked off by the Erector.

XXXV. Brass Work (Fig. 270) must be bright all over the exterior, and have the interior bored at certain after-mentioned places. The **Oilcup** at B can be finished entirely by chuck turning and drilling, polishing with the very finest emery cloth. The **Cylinder Cock**, A, is cored throughout. The main body and the plug socket are both turned externally as far as possible, but the central portion must be finished with file, and the corners cleaned with a riffler. The socket and plug are respectively bored and turned in the manner shown at Fig. 254, the cock then placed in the vice, and the plug ground to fit, with fine emery powder and water, by rotating backward and forward with a wrench upon the shank. The screws are chased, and the flange drilled; and the whole polished with fine emery cloth. The union nut, after finishing, is slipped over the copper pipe, and the conical nipple then brazed to the latter (see page 86).

The **Sight-feed Lubricator**, D, is the only form now used for slide valve and piston lubrication. The oil-chamber, *a*, is fixed in any convenient position, and two connexions made with the steam pipe as shown. Having filled *a* with oil, and the sight-feed *b* with water, the valves *c* and *d* are opened, as well as the two steam cocks, and steam being condensed in the coiled pipe, forms water, which enters *a* and displaces the oil, forcing it up through the glass sight-feed chamber drop by drop, it being seen rising through the water in *b*, than which it is specifically lighter. Reaching the steam pipe, it is carried by the steam to the slide

Digitized by Google

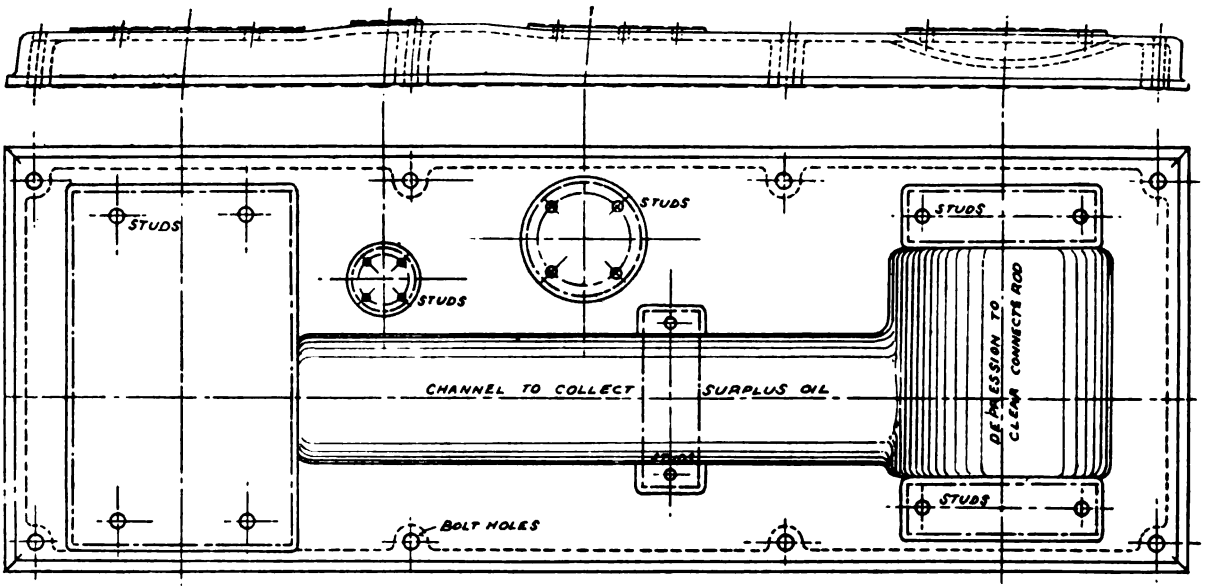

XXXIV. Engine Bed Plate. 1 off. Cast Iron. Fig. 269.

0 1 2 3 4 5 6

SCALE OF FEET

Digitized by Google

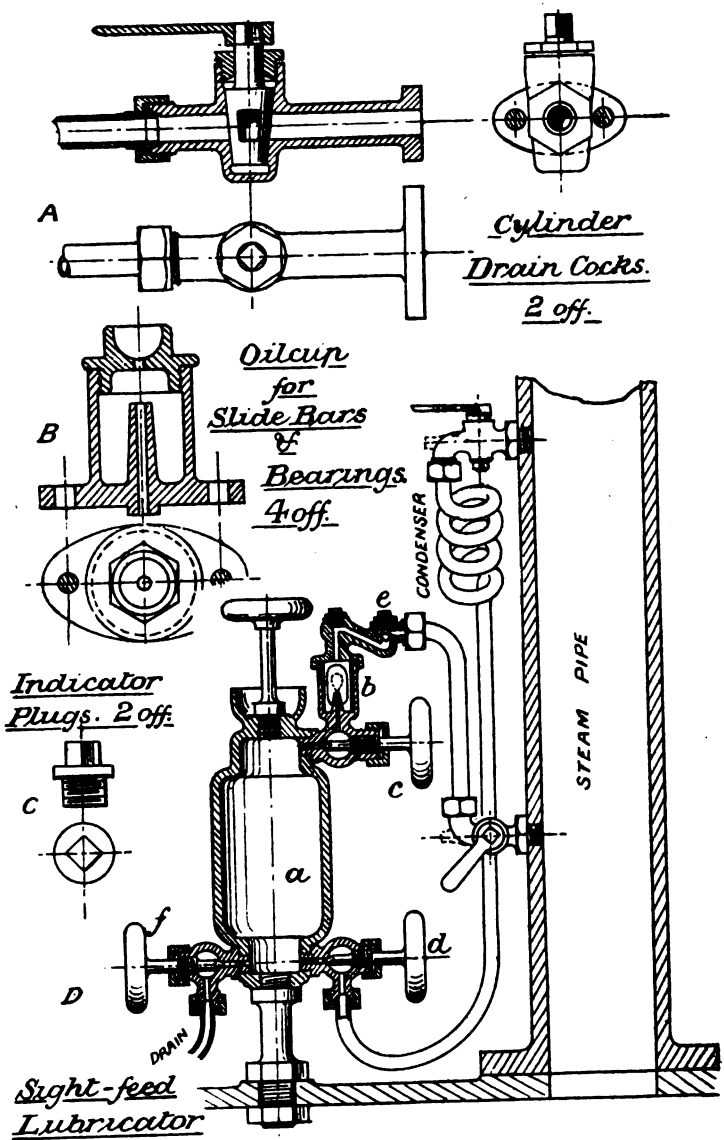

XXXV. Brass Work

Fig. 270. Scale 1/4

Digitized by Google

valve and cylinder; *e* is a non-return valve, and *f* a drain cock. The various parts are bored, screwed, and polished, and then put together. The steam cocks are cast with a core, and are provided in casting with a small boss placed on the bend to assist the centering in the lathe; this boss is shown dotted.

The **Indicator Plugs**, c, are next turned and screwed.

Erecting.—We may now collect all the engine parts for the purpose of erecting, as follows:—

List of Engine Details.

		Figs.
I.	Regulator Lever	228
II.	Bracket for Regulator Lever	229
III.	Pins and Washers for Regulator Lever	230
IV.	Links for Regulator Lever	232
V.	Regulator Valve Spindle	233
VI.	Nut for Valve Spindle	234
VII.	Regulator Valve	235
VIII.	Regulator Valve Box	236–7–8
IX.	Valve Spindles: Main and Expansion	239
X.	Expansion Eccentric Rod	240
XI.	Main Eccentric Rod	241
XII.	Intermediate Valve Rod	242
XIII.	Guide Bracket for Valve Rod ...	243
XIV.	Eccentric Straps and Sheaves ...	244–5
XV.	Slide Bars	246
XVI.	Slide Bar Bracket and Distance Piece	247
XVII.	Crank Shaft Bearing	248–9
XVIII.	Slide Blocks	250
XIX.	Gudgeon	250
XX.	Crank Shaft	251
XXI.	Connecting Rod	252–3
XXII.	Cross-head	254
XXIII.	Piston Rod	255
XXIV.	Piston	256
XXV.	Radius Link	257
XXVI.	Governor Pullies	258
XXVII.	Governor Bracket	259–60

Digitized by Google

LIST OF ENGINE DETAILS—*Continued.*

		Figs.
XXVIII.	Governor Details	261–2
XXIX.	Steam Cylinder	263–4
XXX.	Cylinder Covers	265
XXXI.	Main Slide Valve	266
XXXII.	Expansion Slide Valve	267
XXXIII.	Fly Wheel	268
XXXIV.	Bed Plate	269
XXXV.	Brass Work	270
XXXVI.	Bolts and Studs (not drawn).	

The Erector is now to be provided with a 'General Arrangement,' or complete drawing of the engine, in plan and elevation, having certain principal dimensions supplied. This drawing is given in Figs. 271 and 272.

The Bed of the engine is slung, and lifted by travelling crane into position on blocks of wood, as at *a*, Fig. 273, and then levelled with wood wedges and the aid of the square shown in Fig. 196; the cylinder and bearings then adjusted on their seatings approximately; the back and front end of cylinder bore being bridged with iron bars, the first having a small hole drilled centrally and horizontally, and the second having a central notch in its upper edge (see A and B): a strong, fine string *b* is knotted and passed through the hole, and carried to the front of the bed, where it is pulled tight and wrapped round the support C; the latter being set with one edge agreeing with centre line of cylinder, as measured from the bearing seatings, and having notches, as at D, to hold the string at the correct height. This string constitutes the main centre line, and the front of the cylinder is adjusted to suit by tapping the casting with a hammer, then clamping firmly to avoid accidental movement.

The Bearings are next adjusted. Pass a long straightedge, E, through the brasses, and support it on level blocks till its upper surface nearly touches the string. Clamp the large square F upon E, near the string, and support on block G; then prepare a lath H, to measure the length from cylinder face to edge of bearing brasses, and mark distances on the straightedge E, on each side

Digitized by Google

of the square, up to the bearing faces (shown by curved arrows). Adjust bearings till (1) straightedge touches measuring lath; (2) square touches string along its whole length; (3) face of brasses is lineable with measure of straightedge; and (4) straightedge exactly touches bearing brass throughout its length. Then mark the bearing stud holes through upon the bed, and do the same with the cylinder holes.

The Slide Bar Bracket must be placed with reference to slide bar length. It is wisest, therefore, to temporarily fasten the front cylinder cover and the two bottom slide bars. When all are together, as at *d*, the bracket is set to central position by squaring up from its top surface to the string, and the stud holes traced through.

The Valve-Spindle-Guide Bracket must also be true with regard to the spindles, so these are put through the stuffing boxes and the bracket, and the latter adjusted by measurement from cylinder face on the one hand, *g*, and from the string on the other hand, using blocked-up laths at *h*. If the spindles do not slide truly, a slight readjustment can be made. Examine also for appearance regarding seating, then scribe the stud holes. The governor bracket comes to the Erector fitted up entirely with governors, links, and pulleys. Set up in approximate position, and measure the distances J from the boss faces to the string, these being the most important; adjust to these, and also to distances from cylinder face (*e*) and crank bearing (K). Then test, by measurements at K and G, for parallelism of pulley spindle, and mark off the holes.

The holding-down bolts are lastly marked, all the parts removed, the circles centre-punched, and the Bed Plate either taken to a radial drill, or drilled by ratchet brace, the former being preferable. Tap all the stud holes and insert studs; then return the bed to its erecting position, which need not this time be level, the main adjustments having been made. And now the various pieces are to be put in place in the order we shall mention. First the Cylinder is bolted down, and the Front Cover put on, the Piston inserted, and the Rod passed through; then the Slide Bar Bracket, and the *Bottom* Slide Bars. The Bearings come next, and when fixed have the Crank Shaft laid upon them, with

Digitized by Google

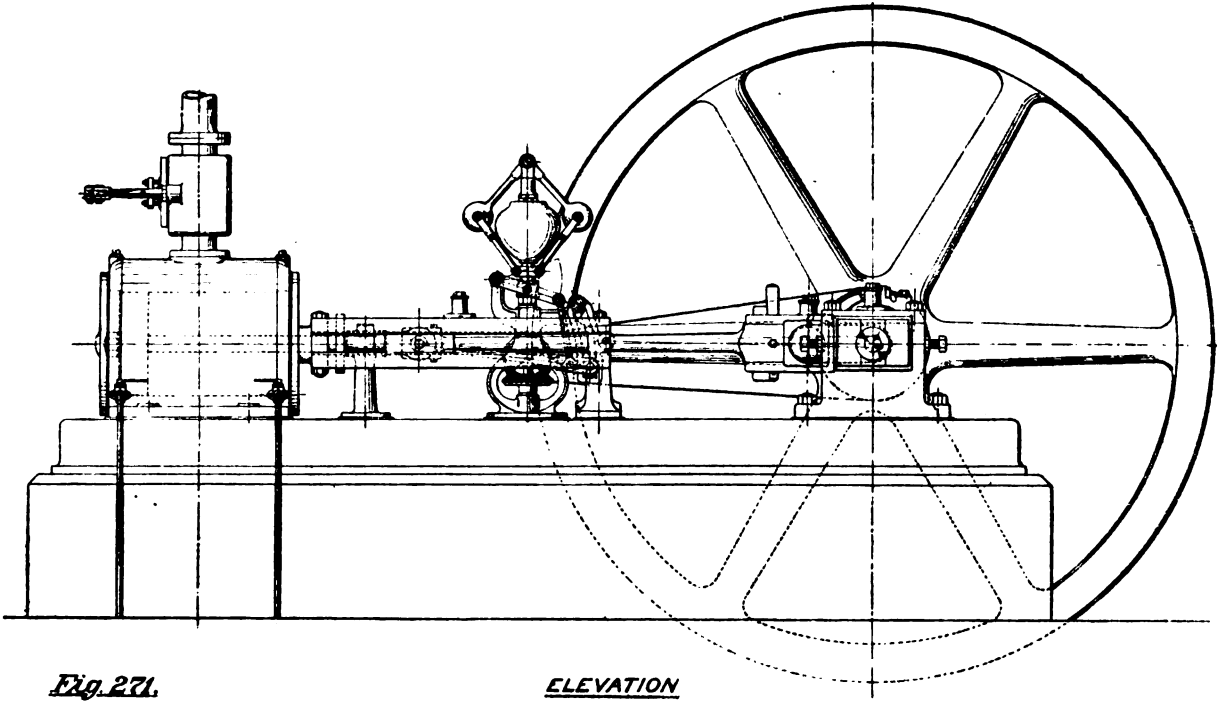

Fig. 271. ELEVATION

Digitized by Google

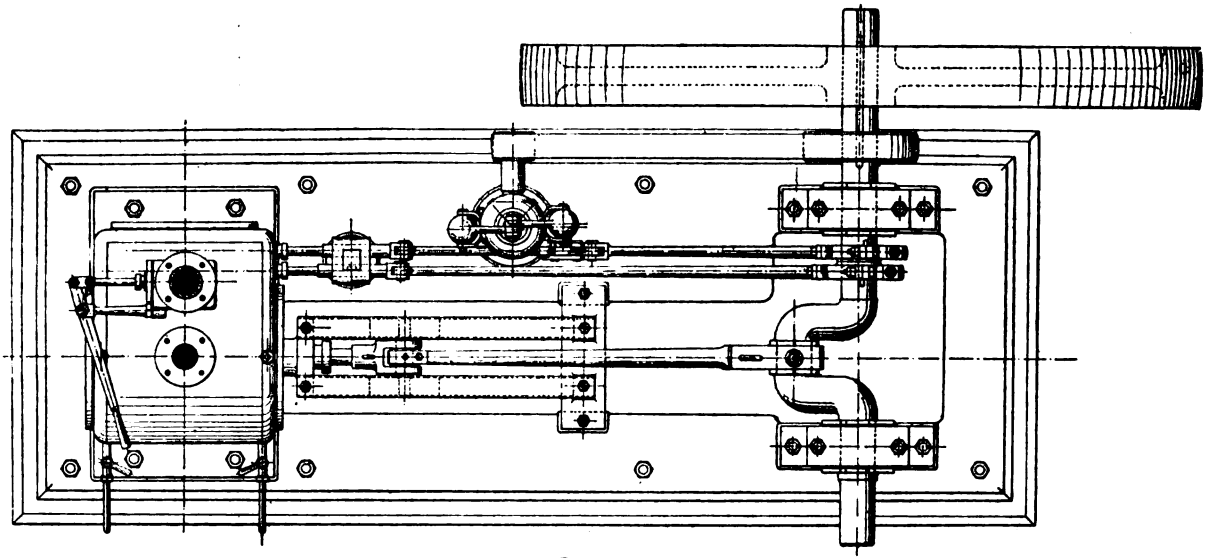

PLAN

Arrangement of Non-condensing, Automatic-expansn., Horizontal Engine.

SCALE OF FEET

Fig. 272.

Digitized by Google

red ochre applied to its journals. Being turned round in the bearings by means of the temporary handles, L, it is lifted away, the brasses scraped, and the method repeated until a perfect fit is obtained. The last time the shaft is removed, it is taken to the marking table to line the eccentric keyways. The angles for each sheave are shown at M, being known after design, and are there called α and β; x and y are therefore found from a table of natural sines.

For x = radius of shaft × sin α, and y = radius of shaft × sin β.

TABLE OF NATURAL SINES FOR ANGLES UP TO 45°.

Deg.	Sine.	Deg.	Sine.	Deg.	Sine.	Deg.	Sine.
½	·00872	12	·20791	23½	·39875	35	·57357
1	·01745	12½	·21644	24	·40673	35½	·58070
1½	·02617	13	·22951	24½	·41469	36	·58778
2	·03489	13½	·23344	25	·42262	36½	·59482
2½	·04362	14	·24192	25½	·43051	37	·60181
3	·05233	14½	·25038	26	·43837	37½	·60876
3½	·06104	15	·25882	26½	·44619	38	·61566
4	·06975	15½	·26724	27	·45399	38½	·62251
4½	·07846	16	·27563	27½	·46175	39	·62932
5	·08715	16½	·28401	28	·46947	39½	·63607
5½	·09584	17	·29237	28½	·47715	40	·64278
6	·10453	17½	·30070	29	·48481	40½	·64944
6½	·11320	18	·30901	29½	·49242	41	·65606
7	·12187	18½	·31730	30	·50000	41½	·66262
7½	·13052	19	·32556	30½	·50753	42	·66913
8	·13917	19½	·33380	31	·51503	42½	·67559
8½	·14781	20	·34202	31½	·52249	43	·68200
9	·15643	20½	·35020	32	·52992	43½	·68835
9½	·16504	21	·35836	32½	·53730	44	·69465
10	·17364	21½	·36650	33	·54464	44½	·70091
10½	·18223	22	·37460	33½	·55193	45	·70710
11	·19081	22½	·38268	34	·55919		
11½	·19936	23	·39073	34½	·56640		

The heights x and y above or below centre line have to be scribed by laying the crank webs vertically or horizontally as at P and N; and the distance Q also measured, giving the centre line between the two eccentric rods. Slot-drill the keyways. Then drive the sheaves upon the shaft, to which they should fit tightly; put in the keys, and replace the crank in its bearings. (It may be noted

Digitized by Google

that the copper hammer should always be used in these operations.) Bolt down the bearing caps.

Fix the Valve Spindle Guide, valve spindle Stuffing Boxes, and Valves, also the Governor Bracket with gear complete. Twist the valve spindles round until the valve screw is placed symmetrically with regard to the valve; then measure for equal play either side of the guide bracket. In the case of the expansion spindle, put in the intermediate rod, and let the lifting link be vertical when valve is at half stroke. We shall proceed to set the valves; so to aid us in turning the crank to its various positions, the flywheel is driven on to the shaft, and there keyed. The governor pulley can be put on afterwards, being in halves.

It is convenient to find the position of the main slide valve by the aid of a thin wedge of wood, R, which is tried in the port on the horizontal centre line, and on removal measured. Put the main slide to open to 'lead' at the front of the cylinder, the amount being known; place the crank horizontal, as taken from the seatings, and put the crank pin to the front, as at S. Now measure with a lath the length from valve spindle pin to nearest edge of eccentric sheave.

Set the valve for lead to back of cylinder, place the crank in horizontal backward position T, and measure the length as before. The two lengths obtained should differ only by a very small amount, and, being averaged, the length of the main eccentric rod can be found. During the preceding operations the expansion valve can be slid to one side or the other for convenience.

The expansion slide must be set centrally. We first move the main slide to opening position at front and back part alternately, and each time measure the distances U on the valve spindle. By setting the spindle to half the sum of the two measurements at U, the valve will be central. The expansion valve is now moved till midway between the main valve ports (V V), and its spindle measured as at U. Set the crank webs upright, as at W, with straightedge and plumblines. Take the distance, Z, to eccentric centre, found thus:

$$Z = \text{radius of eccentric circle} \times \sin \beta;$$

and move the expansion spindle back at U by this amount; then

Digitized by Google

measure length for eccentric rod between pin of radius link and edge of sheave. Reversing the crank, as at x, the valve is moved to the front by the same amount, z, the length again obtained, and the two averaged. In our description of the machining of these rods we supposed the length already given; but it is always found for the smith in this way, though often the rods are finished in two pieces, and afterwards welded to correct length.

Put the valve rods in place, also the crosshead, connecting rod, gudgeon, and slide blocks; connect up to crank pin, having previously fitted the brasses to the pin by scraping, and bolt down the top slide bar with distance pieces between. Fix the regulator valve box (previously put together), the cylinder cocks and lubricators, the steam chest cover, and the back cylinder cover, making all joints with red-lead 'putty' between. The putty is a mixture of red and white lead, softened with boiled linseed oil. After covering the joint surface, a piece of soft hemp line is laid once or twice round, and the cover then put on. Portland cement or asbestos discs are also used.

The last stage of all is to carry away the parts to their permanent position, and bolt down the whole to its stone bed; connect up the steam and exhaust pipes, and get up steam.

We shall now conclude with one or two general points.

Templates and Jigs.—The former have been sufficiently explained in Figs. 253, 264, and 266. They are used very extensively in much repeated work, thus saving a great deal of time in marking off, and they take a variety of shapes. Jigs are an extension of the template principle. Instead of thin plates, castings of an inch or so in thickness are used, supplied with holes where needed, the object being to guide the drill to its proper place on the work without the necessity of lining-out at all. An example of the application of this principle to a cylinder cover is shown at v, Fig. 273. (*See Appendix II.*)

Hobbing a Worm Wheel.—A cutter for forming *spur*-wheel teeth was given at Fig. 186, and a method of cutting *bevel* teeth at Fig. 262. Worm-wheel teeth can also be cut by first turning in the lathe a worm of the correct shape, and of good steel. This is then fluted to form a milling cutter, and is termed a *hob* in the workshop. The operation is then much the same as

Digitized by Google

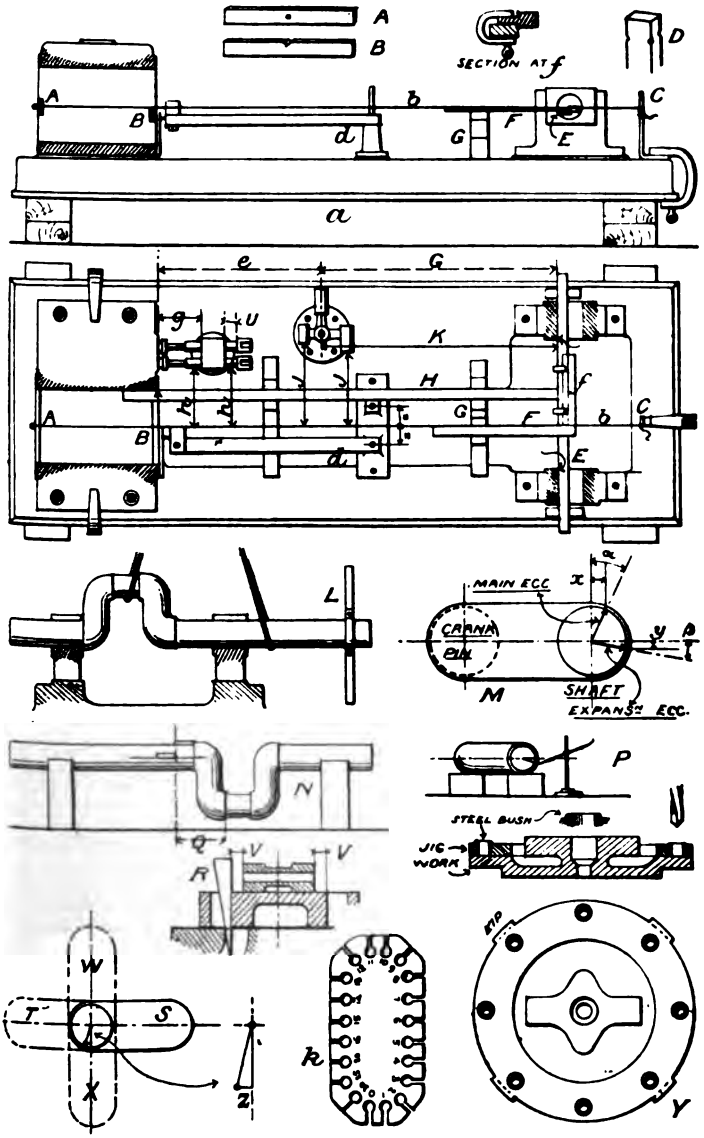

Erection of Engine &c. Fig. 273.

Digitized by Google

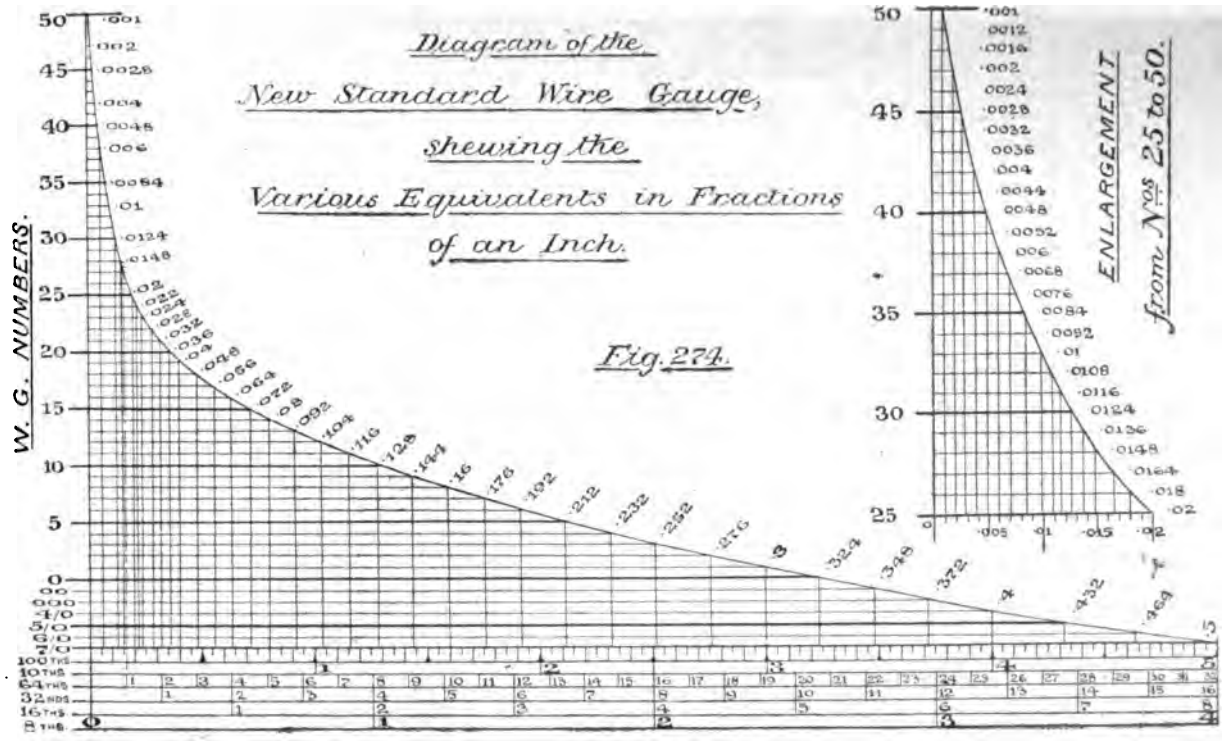

Digitized by Google

that described at page 58. The spaces are first cut on the angle with a spur-wheel cutter, and the finish given with the hob by placing both wheel and worm in position, as at Fig. 72, and rotating the latter on a milling spindle. (*See Appendix II.*)

Dimensions.—In most workshops the inch is divided into vulgar fractions in the common way. But in dealing with work of great accuracy, or where small differences are to be represented, the above divisions have to be carried beyond sixteenths, and then become cumbersome. To avoid this difficulty, the decimal system of division has been used for a considerable period in a few shops, and has proved a great boon, being easily learnt by any workman, and its advantages greatly valued. We have spoken of *high and low gauges* for interchangeable work. Where these are used, the drawings are supplied with what are known as 'plus and minus' dimensions. Thus all shafts, pins, &c., are figured ·002″ larger than the size required, an inch pin being 1·002″; and holes are marked ·005″ larger than their pins, an inch pin requiring a hole 1·007″. There is an understood plus and minus allowance of ·002″ on both these dimensions, so that if a large pin and small hole come together, there will be a minimum clearance of ·001″, while a small pin in a large hole will have a maximum clearance of ·009″. For driving fit, the hole and shaft are figured the same, and the kind of fit noted. (*See Appendix II.*)

It was long ago found advisable to fix the thickness of thin plates and the diameter of small wires by reference to a table of numbers, which received the name of the Birmingham Wire Gauge or B. W. G., and where each number had a corresponding dimension. This table was readjusted about the year 1885 and considerably extended, under the name of the New Standard Wire Gauge, and has been shown diagrammatically in Fig. 274, the horizontal scale representing a length of half an inch, while the ordinates are referred to the numbers on the left hand. The actual gauge is represented at K, Fig. 273, being a steel plate provided with slots of the correct widths.

Split Pins.—Half-round wire split pins are made in fifteen different sizes, the largest being $\frac{7}{16}$″, $\frac{3}{8}$″, and $\frac{5}{16}$″, and the remainder numbered 1 to 12, corresponding with W. G. The

Digitized by Google

diameter of eye is equal to that of the pin, and the lengths vary as follows :—

Nos. 7 to 12	... ...	1″ to 4″ long,	rising by $\frac{1}{4}$″.
,, 5 and 6	... ...	1″ to $4\frac{1}{2}$″	,, ,,
,, 1 to 4	... ...	1″ to 5″	,, ,,
$\frac{5}{16}$″ pin	... ...	$1\frac{1}{2}$″ to $5\frac{1}{2}$″	,,
$\frac{3}{8}$″ ,,	... ...	2″ to $5\frac{1}{2}$″	,, ,,
$\frac{7}{16}$″ ,,	... ...	$2\frac{1}{2}$″ to $5\frac{1}{2}$″	,,

Digitized by Google

CHAPTER VII.

BOILER MAKING AND PLATE WORK.

We now enter upon a division of practical engineering having no direct connection with any previously described processes, excepting only Metallurgy (Chapter III.). Boilers, Tanks, Girders, Ships, &c., are *built up* by bolting or riveting together plates previously manufactured at the *Rolling Mill*, intermediate connections being formed by '*section*' bars, rolled at the same place.

Materials.—It is beyond our scope to give a detailed account of the production of wrought-iron or steel bars, angles, or plates, by rolling while hot. Wrought Iron is obtained from Cast Iron by *puddling*, as at p. 75, where the process was followed to the formation of bar iron of different qualities. The bars are now hot-rolled by passing between pairs of horizontal rollers, being supported on their way to or from which by a train of bearing rollers. Putting the bar through the mill a sufficient number of times (both crosswise and lengthwise), a **flat plate** is obtained; then sheared to rectangular shape. These rolls are too simple to need illustration. They are very powerful, being driven by a large engine, which is either itself reversible, or the rolls are supplied with a reversing clutch.

If '**Section**' **bars** are required, the material is first reduced to a convenient thickness, and then passed through a set of rolls capable of gradually decreasing the sectional area, while lengthening the bar. Thus any particular section may be obtained, the process consisting of 'cogging,' or roughing-down the bar, and 'finishing,' or giving the true section. In Fig. 275, A represents a train of rolls for producing L or angle bar, *a* being the cogging set and *b* the finishing set; B shows rolls for plain or merchant bar; C those for T bar; and D for H (aitch) bar. The operations occur from left to right, the upper rolls being usually provided with discs riding on corresponding depressions in the lower roll, and thereby preserving the correct thickness of bar.

Digitized by Google

Iron plates retain the fibrous quality imparted to the bar, and are therefore much stronger in the direction of the fibre than across it. Owing to the secretion of cinder and scale between the layers during piling, the finished plate must be carefully examined for faults—(1) by eye, (2) by slinging from the four corners and tapping, when the dull, ashy portions may be detected by the non-vibration of sand sprinkled over the surface

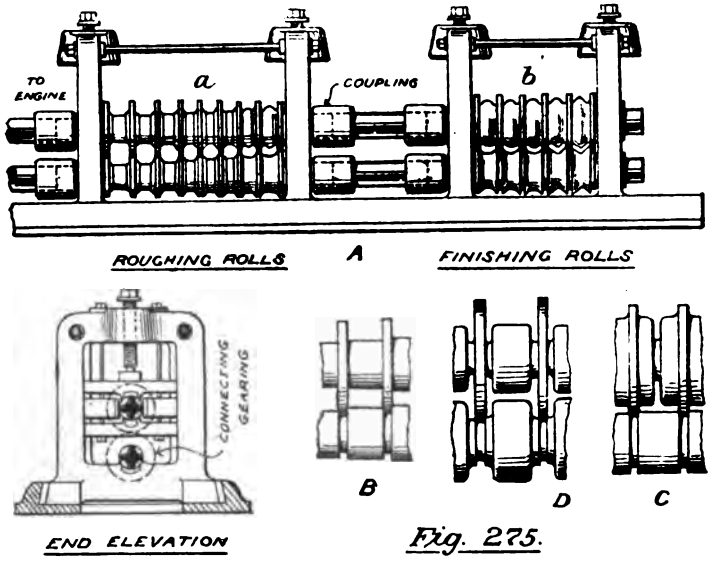

Fig. 275.

Rolling Mill for "Section" Bars.

Very bad plates are rejected, and the others placed in the scale according to quality, thus evolving the various degrees of 'best,' 'double best,' and 'treble best;' terms, however, by no means sufficiently definite. The Yorkshire irons are made with great care and a large expenditure of fuel, being also very carefully selected.

Steel Plates and Bars are rolled similarly. The ingots, obtained as at pp. 79 to 82, are, after casting, usually broken up, piled, and re-heated, though some authorities complain that this destroys the homogeneity for which steel plates are admired, and prefer to roll direct from the ingot. The slabs or ingots should

Digitized by Google

be well squeezed in both directions when made into plate. Steel plates are much more reliable now than when first introduced, it being clearly recognised that a certain amount of strength must be sacrificed to ductility. They are not, therefore, considerably stronger than iron, but much more homogeneous or even in structure, the particles being so thoroughly re-arranged when in the molten state. Iron plates, on the other hand, are very various in quality, even over one plate, because of the processes employed in obtaining fibre. A test strip, either for plate or bar, rarely gives an exact determination of the whole, while the contrary holds with steel. Steel plates are termed 'mild' because they have little more carbon than wrought iron plates; they have some 30 per cent. more strength than the latter, with one and a half to twice the elongation. The price of iron being also greater, it is not surprising that steel is the only material now used for plate work, excepting where continuous flame action (as in locomotive fire-boxes) renders Lowmoor iron or copper preferable. **Copper**, though more expensive, and losing its strength somewhat while hot, is an exceedingly good conductor of heat, and deteriorates less under the action of flame, lasting therefore longer than iron, while being more efficient.

Steel, then, in a mild, homogeneous form, is the material now generally used for all plate and angle work. Both steel and iron are received from the rolling mill under the following forms:—

Plates	▬▬▬	H (Aitch) Bars	H
Angle Bars	L	Flat and Square Bars	▬
Tee Bars	T	Round Bars	●
Channel Bars	⊏		

Brands, qualities, and sizes of plates.—The qualities of iron have been mentioned at p. 76, 'common' being used for bridges and girders, and the remainder for boiler work. **Mild Steel** occurs in four qualities, thus:—

1. Ship and bridge quality.
2. Ordinary boiler quality.
3. Soft boiler quality.
4. Superior quality (to resist flame).

Digitized by Google

The brand **BT** shows the plate has passed the Board of Trade test, while **LR** indicates that of Lloyd's; and there are other brands representing various makers.

The sizes of plates obtainable vary somewhat with the makers, the following table being that issued by the Steel Company of Scotland. The figures must be kept within the length and breadth given, but must be *checked for area:* thus, 14 ft. by 4 ft. may be the limits of length and breadth respectively, but $4 \times 14 = 56$, and the area limit is only 28 square ft.

MAXIMUM SIZES OF STEEL PLATES.

Thickness.	Length.	Breadth.	Area in Square Feet.
$\frac{1}{16}$″	14′ 0″	4′ 0″	28′
$\frac{3}{32}$″	18′ 0″	4′ 6″	31′
$\frac{1}{8}$″	22′ 0″	5′ 0″	40′
$\frac{5}{32}$″	25′ 0″	5′ 3″	50′
$\frac{3}{16}$″	30′ 0″	5′ 6″	65′
$\frac{1}{4}$″	33′ 0″	6′ 0″	72′
$\frac{5}{16}$″	35′ 0″	6′ 3″	75′
$\frac{3}{8}$″	38′ 0″	6′ 6″	85′
$\frac{7}{16}$″	40′ 0″	7′ 0″	98′
$\frac{1}{2}$″	40′ 0″	7′ 6″	105′
$\frac{5}{8}$″	40′ 0″	8′ 3″	115′
$\frac{3}{4}$″	37′ 0″	8′ 9″	125′
$\frac{7}{8}$″	34′ 0″	8′ 9″	125′
1″	31′ 0″	8′ 9″	125′
$1\frac{1}{8}$″	28′ 0″	8′ 9″	110′
$1\frac{1}{4}$″	25′ 0″	8′ 9″	100′

Rivets are prepared from round bar. If of iron, they should be of the very best quality — 'Swedish,' 'Charcoal,' or 'Low Moor,' and capable of standing re-heating without deterioration. Steel rivets have now almost superseded those of iron. The greater strength of the plates was of little value so long as the joint (the weakest part) remained much as before, but since the introduction of hydraulic riveters by Tweddell, and with care in re-heating, there is no objection to steel. The making of rivets is shown at p. 99.

Digitized by Google

Hand Tools, &c.—The boiler-maker and plater require somewhat different sets of tools. Both men must be able to

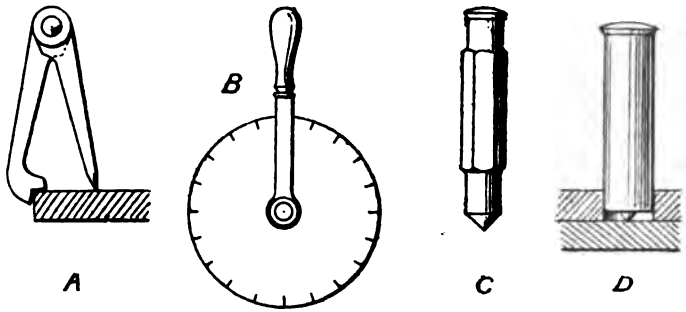

Marking Tools *Fig. 276.*

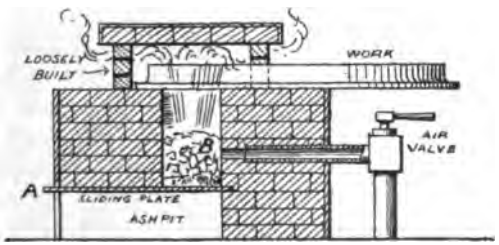

Fig. 277

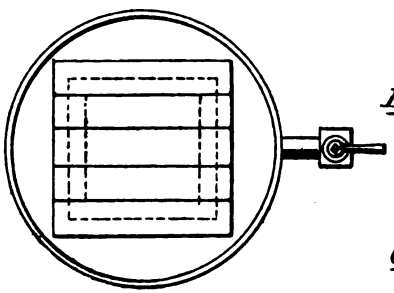

Boiler-Maker's Hearth: for heating Angle Bars &c.

mark out their work, although in large shops a separate man is kept for the purpose. In the latter case the work may be further subdivided among template-makers, *platers*, *riveters*, and *angle-*

Digitized by Google

iron smiths, and even still further under caulkers, flangers, &c., the three italicised representing the usual division.

For **Marking-off** a large, low table is used, long squares and straight edges, a scriber, as at Fig. 194; wing compasses and dividers; a small, *very tight* pair of compasses for describing rivet-hole circles; and in some cases a scribing-block. For scribing rivet-hole centres, parallel to edge of plate, a compass like that at A, Fig. 276, is useful, acting like the carpenter's gauge, while the wheel tool B, Fig. 276, of 24" circumference, is run over curved plates to measure their developed length. Of centre punches there are two, one at C, Fig. 276, for centreing or dotting, and the other, D, for centreing a hole in one plate to agree with a drilled hole in another. A small taper rod or *podger* is required to pull plates into line by insertion in their rivet-holes.

The **Angle-iron Smith** must be able to bend his bars in various directions, and usually inserts a welding or glut piece between the parts to be joined, thus making a double fork-weld. His hearth is built of brickwork, as shown at Fig. 277, coke being placed on a sliding plate A, which fits under the central well B, the blast entering from behind. The work is laid on the top, and loosely built round with firebricks, then covered with slabs of the same in cast iron casings, and a good welding heat obtained without difficulty. Reverberatory furnaces are employed for heating plates; they are similar to that shown at Fig. 85, p. 75, but have a flatter roof, and a larger door for the admission of the plates. A rivet-heating furnace is smaller, but of the same design.

The **Boiler-smith's tools** are not dissimilar to those in Chap. IV. In addition to the tool C, Fig. 97, *a round-faced flatter* A, Fig. 278, is required for finishing rings. *Chisels* or cutters, both curved and straight in profile, and *hollow swages*, as at B, Fig. 278, are also necessary. For tongs, the three forms, C, D, and E are useful—C for lifting angle bars, D for hoops, and E for rivets.

Plates may be flanged, bent, or straightened by hand, large wooden hammers being then used, as at F, Fig. 278, three of which are employed by as many men, who give rapid consecutive blows; but these processes are done by machine where possible, and will be described later.

Digitized by Google

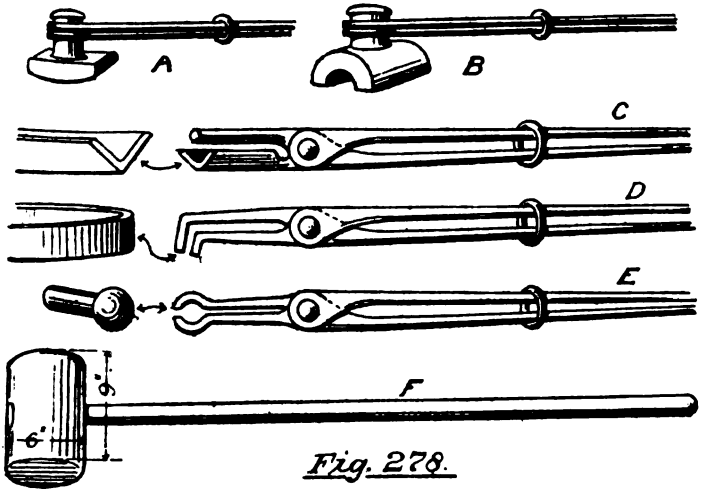

Fig. 278.

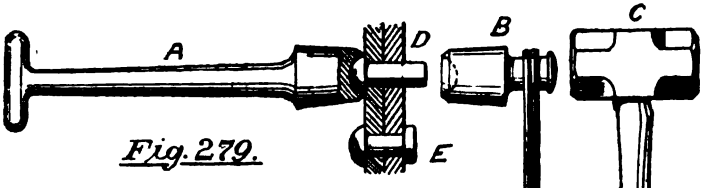

Fig. 279.

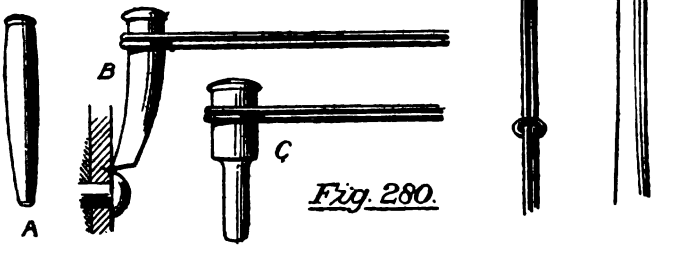

Fig. 280.

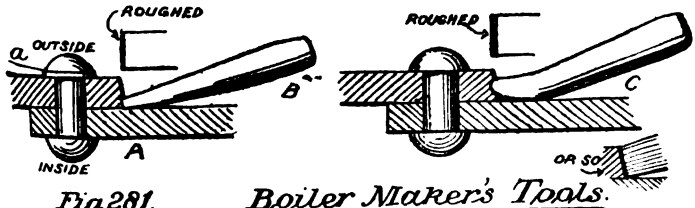

Fig. 281.

Boiler Maker's Tools.

Digitized by Google

The **Plater** requires three *chisels*—the flat chisel, Fig. 201, the cross-cut, as at Fig. 200, and another with curved profile for chipping the edges of manholes, &c. *Hammers* are of three kinds—the fitter's hammer, Fig. 199, the sledge hammer, and a riveting hammer with long head and small panes for places where the sledge or the portable riveter cannot be employed. A **Riveting Gang** consists of three men and a boy; the boy brings the red-hot rivet, which the leader inserts, as at D, Fig. 279; another man holds up the dolly, as at A; while the third man and leader give alternating blows until the cheese head E is formed. The leader then applies the cupping tool or snap B, while the striker gives two or three smart finishing blows with the sledge C. Work should be designed for machine-riveting wherever possible, as hand work can neither make the rivet completely fill the hole or compete in cost.*

Before riveting a seam, the plates, if punched or drilled separately, are brought into alignment by the podger and bolted in one or two places; then the *drift* at A, Fig. 280, may be applied and forced through by a hammer to clear out the holes. Though of undoubted advantage if used temperately, the drift is now banished from the best shops, plates being injuriously distressed by it when the holes are very untrue. When a joint is to be broken, the rivet-heads are chopped off by the set B, struck with a sledge, and the punch C applied to drive out the rivet.

Caulking is the process of making a boiler joint thoroughly staunch by burring up the plate edges with a blunt chisel or caulking tool. In Fig. 281, A is the section of a boiler joint, where the edge of the outer plate is bevelled at an inclination of 1 in 8. Striking the tool B with a hand hammer a burr is formed, and the rivet heads treated similarly, as at *a*. Severe caulking with sledge diminishes the grip of the rivet and frictional strength of the joint. To avoid this a fullering tool C is often used, but there is no objection to caulking if a large number of light blows be given. A Pneumatic Caulker will be described later. Caulking the rivets is not considered necessary if hydraulic riveting be properly applied. (*See Appendix II.*)

* See diagrams by Mr. Tweddell, prepared for his paper before the North-east Coast Institution of Engineers and Ship-builders, given in Fig. 301*a*.

Digitized by Google

Punched *v.* Drilled Holes. — Formerly the holes were punched in a boiler plate before rolling the latter into cylindrical form, and alignment then obtained by very forcible use of the drift. The holes were marked by dipping the end of a short piece of brass tubing into white paint and transferring to the plate; the puncher could not therefore give great accuracy, and the plate needed considerable stretching when a pair of holes

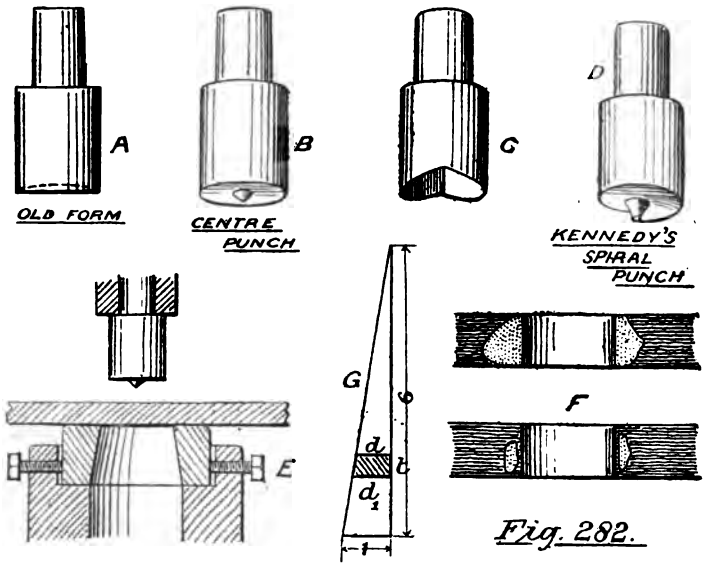

Fig. 282.

Punches.

made 'half moons.' Later the centre-pop replaced the white ring, and a 'centre' punch as at B, Fig. 282, was used in the machine, so that the hole could be punched with accuracy. The machine punches thus took the successive forms, A, B, C, and D. C was introduced to avoid distress of plate by giving a *gradual* shear, and D, Kennedy's spiral punch, still better carried out the idea of C, as proved by actual tests. The bolster is shown at E, to support the plate while punching; and the size of hole (larger than the punch) may be found by construction at G, a triangle

Digitized by Google

being drawn with sides as 1 : 6. Then if d be diameter of punch, and t plate thickness, d_1 will be the size of hole in bolster, or

$$D = d + \tfrac{t}{8}.$$

The material removed from the plate is known as the 'punching,' or 'burr,' and during the operation a certain portion is compressed into the surrounding plate, thereby increasing its density and causing 'distress;' the clearance between punch and bolster hole is to prevent this, which it does partially. The distressed area is said to be small, and the distressment relievable by rimering, annealing, or both. Dr. Kirk's experiments in 1877 on the fracture of punched plates, showed the crystalline or weak portion varying between the two limits at F, Fig. 282. All this was removed by subsequent annealing, heating to redness, and slowly cooling.

But the question was raised: if the plates require such treatment after punching, and alignment be not then obtainable unless punched *after* rolling (very difficult with machines as made), why not *drill* them at once and avoid annealing? There is no difficulty in drilling *after* bending, and further, the holes may be made through both thicknesses of plate at once, thus securing accuracy of position. Drilling 'in position' is therefore the present-day practice, and we are not aware of any workshop where punching is performed except for very thin plates, or for roughing out man-holes, &c. After drilling, the sharp edge is taken off by a countersinking tool, or rosebit, to prevent cutting action on the rivet, caused by expansion and contraction of the boiler.

Shearing causes the same harm to the plate as punching, and the edges should always be planed afterwards.

D Cramps as at A, Fig. 219*b*, are required by boiler makers for temporarily fastening plates together, or for providing a hold when slinging.

Machine Tools, as explained in Chapter V., are daily gaining ground, to increase the output, while securing greater accuracy and cheaper production. As in the Fitting shop, they were at first driven entirely by belts from a line of shafting, but the intermittent demand renders hydraulic power more advan-

Digitized by Google

tageous. Mr. Tweddell advocates the almost universal application of hydraulics for plate work, and has fully confirmed his advocacy of the system, especially where the power has to be taken about to various places in succession. · In all shops *Riveting Machines* and *Flanging Presses* are now actuated by water pressure; so also may be *Punching* and *Shearing Machines*, though more often driven by shafting; while *Drilling*, usually performed by shaft power, has been successfully attacked by electricity and water pressure; portable hydraulic drills, under certain conditions, having proved both efficient and economical.

Punching and Shearing Machines.—It is customary to combine both operations in one machine, as a plate is seldom punched and sheared at the same time. Fig. 283 shows a good example of this tool, as made by Mr. John Cochrane, of Barrhead, capable of either punching, shearing, or angle cutting. A shaft A has fast and loose pullies at B, and fly wheel at C for overcoming variable resistance. The power passes, by pinion and wheel, D and E, to a second motion shaft F, and in like manner, by wheels G and H, to the main shaft J. The shaft J has eccentric pins KK formed upon its ends to give a vertical reciprocating motion to the slides L and M, the former carrying the punch, and the latter the shearing knife. Dies upon the pins KK, prevent undue wear, and the fork N prevents the rising of the plate when the punch is withdrawn. The shearing knife always moves while the driving shafts revolve; but the punching slide L is driven from pin K through the hollow die P and a cam piece Q, the latter being connected to a handle R. When R is upright the downward motion of P is transferred to L: but if the handle be laid on its side, so also is the cam; P then moves freely without pressing upon L, and no punching occurs. Thus by changing position of K, the workman has ample time to set his plate, while the shafts still revolve. The dies are hard steel, and steel plates in slide M receive the wear. The angle-shearing knife is fastened to a rocking lever S, actuated from shaft J by an eccentric T, having ball and socket connection to the lever. Here, again, the withdrawal of a sliding piece U serves to stop the motion of the knife, which is necessary with bars, though not with plates.

Digitized by Google

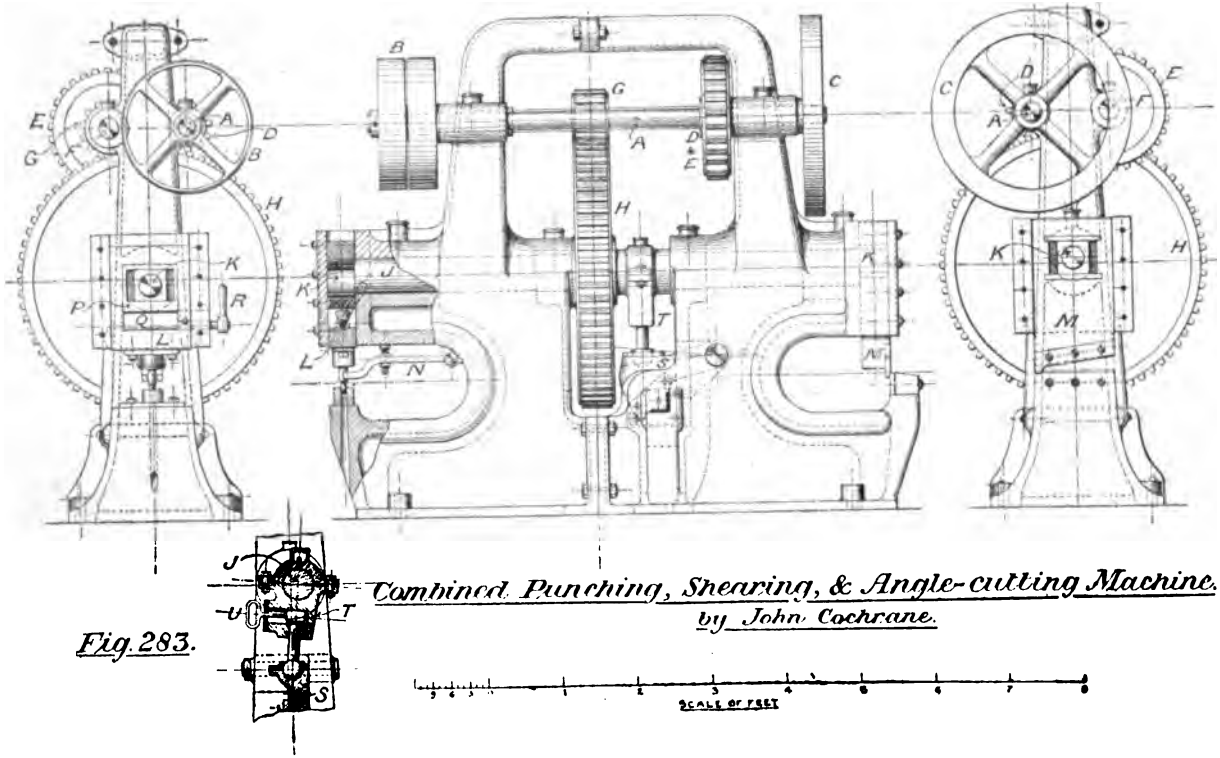

Fig. 283.

Combined Punching, Shearing, & Angle-cutting Machine.
by John Cochrane.

Digitized by Google

At Fig. 284 is shown an **Hydraulic Punching and Shearing Machine,** designed by Mr. Ralph H. Tweddell, of Westminster, for performing the same operations as the foregoing by means of water pressure. In this example there is no reason why the three parts should be combined except to save floor space. A cylinder and ram are required for each operation: A for punching, B for angle-cutting, and C for shearing; there are also the lifting pistons at D D D. Water being supplied from the accumulator pumps at a pressure of 1500 or 2000 lbs. per sq. inch, two pipes are connected with each cylinder, one for 'pressure' and the other for 'exhaust,' marked P and E respectively. The valve boxes at F are supplied with piston valves (worked from hand and foot levers J and K) to control the supply and exhaust; but a *constant* pressure, on the pistons D D, causes the rams to rise when water is exhausted from the main cylinder. A small lever G, moved by ram C when at the end of its down stroke, is connected to a screwed rod H, having adjustable discs, which restore the levers J and K to the horizontal position, stopping the water supply and the movement of ram C: this is known as cut-off gear. Two overhanging cranes L, L, support the plates while being operated on.

The **Multiple Punching *or* Shearing Machine** in Fig. 284*a*, on Tweddell's system, has been designed to prepare plates required in forming wrought-iron pipes for conveying water or oil across country, and known as 'pipe lines;' it is also useful for ships' funnels and masts, and for girder work generally. A shearing blade or row of punches can be attached at will; the latter being shown in operation at A. The punches are set alternately low and high, so that the punching resistance commences gradually, and they are attached to a beam B capable of vertical movement. Downward motion is obtained by a leftward travel of bar C, whose lower rollers press upon beam B, while the upper ones re-act upon inclined planes D, D, D, fastened to the framing. The working ram E (see enlarged section) moves bar C; water entering the cylinder F from behind, and connection between C and E being made with a toggle G, to allow for vertical travel, H is the valve box with piston-valve moved by lever J, and the cut-off is effected automatically by the bell crank K, as

Digitized by Google

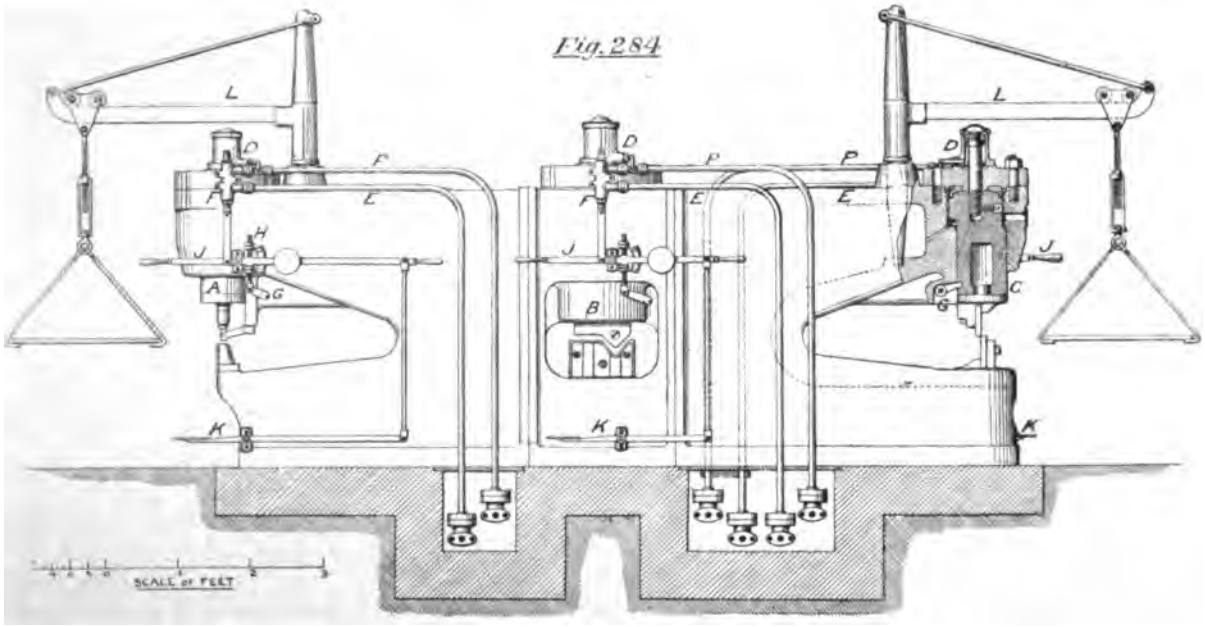

Hydraulic Punching, Shearing, & Angle-cropping Machine.
(TWEDDELL'S SYSTEM)

Digitized by Google

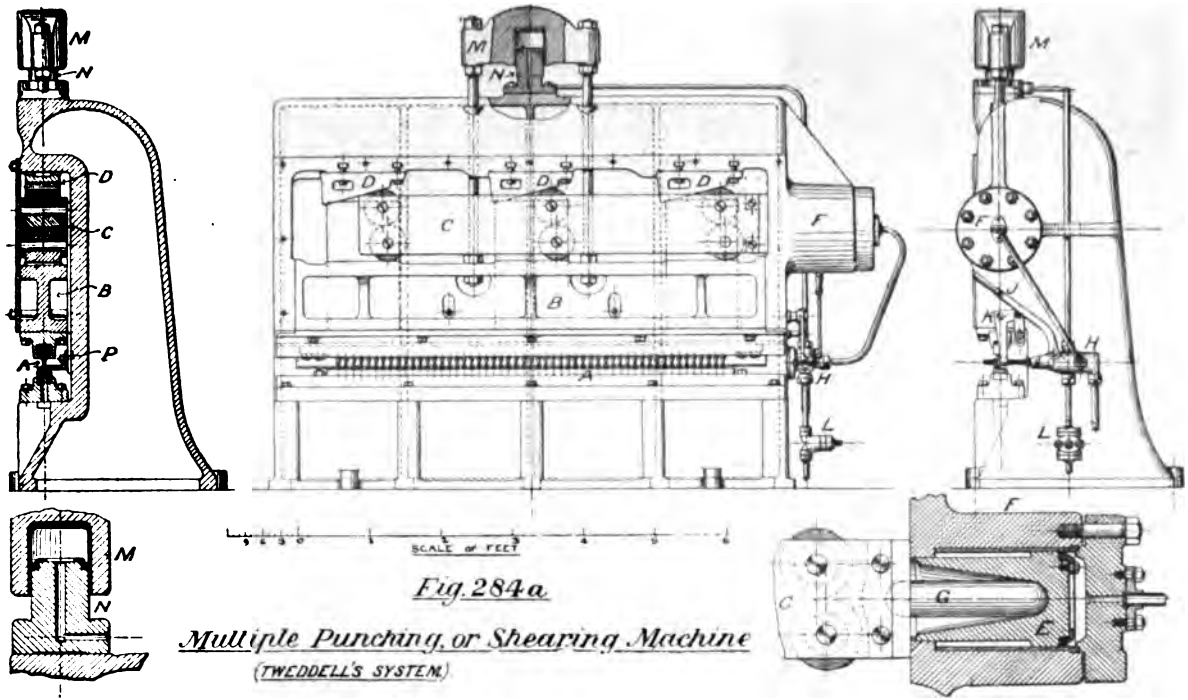

Fig. 284a.

Multiple Punching or Shearing Machine

(TWEDDELL'S SYSTEM.)

Digitized by Google

previously described. A fixed ram N on the top of the framing, has a cylinder M in the form of a girder, to which a constant water pressure is supplied, and the girder is connected by bolts to the beam B, so that a rise of the latter takes place whenever the main cylinder is opened to exhaust. The angle bar P prevents the plate from lifting, and L is a stop valve.

A **Plate-edge Planing Machine** is shown at Fig. 285, having a long table A, upon which the plate is clamped by screws B B. The tool C is fixed in a cylindrical box, provided with handle D resting on stops, so that direction of tool point may be reversed at either end of cut, shown by the arc E; this is performed by the workman, who travels on a platform F attached to the saddle V. The latter has a hand-wheel and screw G to set the tool, while the wheel H, turned by hand, gives vertical feed. The saddle is traversed by screw J, driven from the countershaft K by gearing: while K is provided with fast pullies M, N, and loose pullies L L L. When the forks are in the position shown, no work is done, but if the straps (crossed and open) be moved to the right the saddle will travel to the left and *vice versa*. Reversal is automatically effected by projections P P striking the stops Q Q at either end of the stroke alternately, thus moving the straps, decision being given by the weight R, which causes a pressure between the rollers at S. The mid position is fixed by stops T: and the standards are so arranged at U that they *overhang* the work, thus allowing the admission of any length of plate. One setting may serve for several plates.

A Band Sawing Machine is a very useful tool in a boiler shop for cutting out plates of intricate shape, while straight plates, too thick to be sheared or punched, are cut by a *circular saw* when necessary. As these are so well-known in their wood-working capacity, diagrams have been thought unnecessary.

Plate-Bending Rolls, in their most common form, are shown in Figs. 286 and 287, the rollers being supported horizontally. These are the design of Mr. John Cochrane, of Barrhead. The lower rolls A A revolve in fixed bearings, while those of the upper roll B are lifted or lowered by the screw C, the worm wheel D acting as a nut, while the worm is turned by the spoked wheel E. A A are the driving rolls, and the gearing is very

Digitized by Google

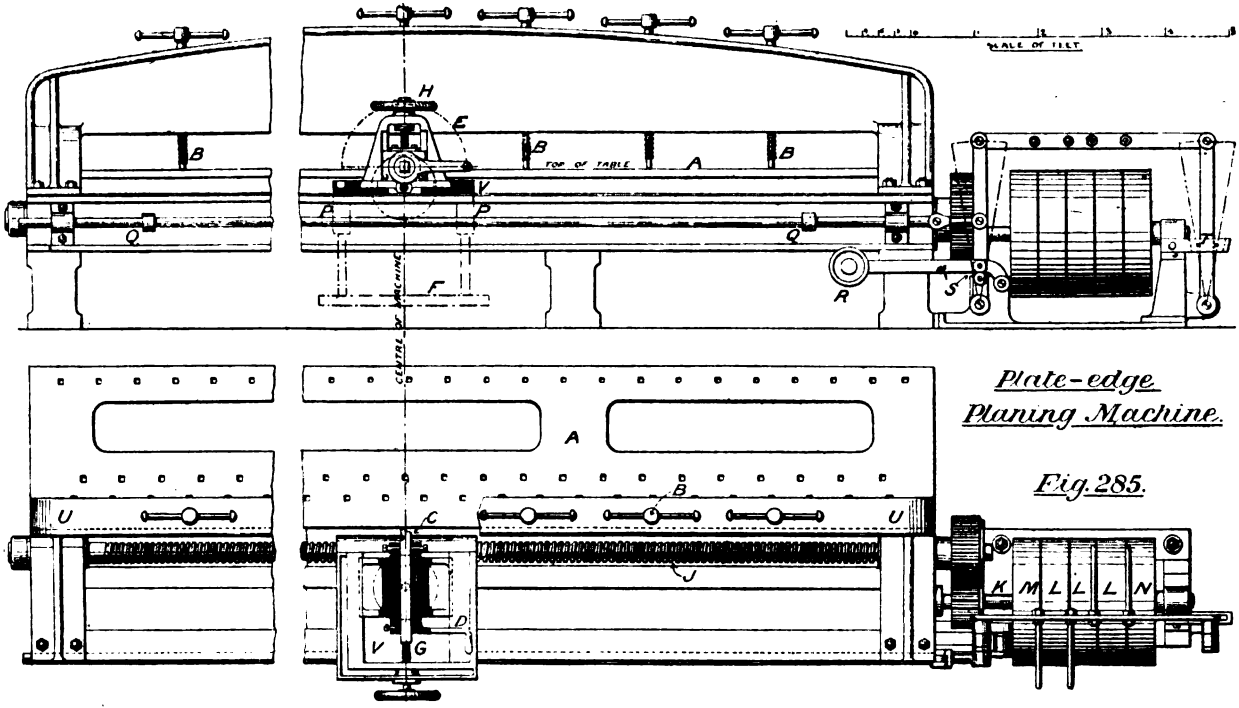

Plate-edge Planing Machine.

Fig. 285.

Digitized by Google

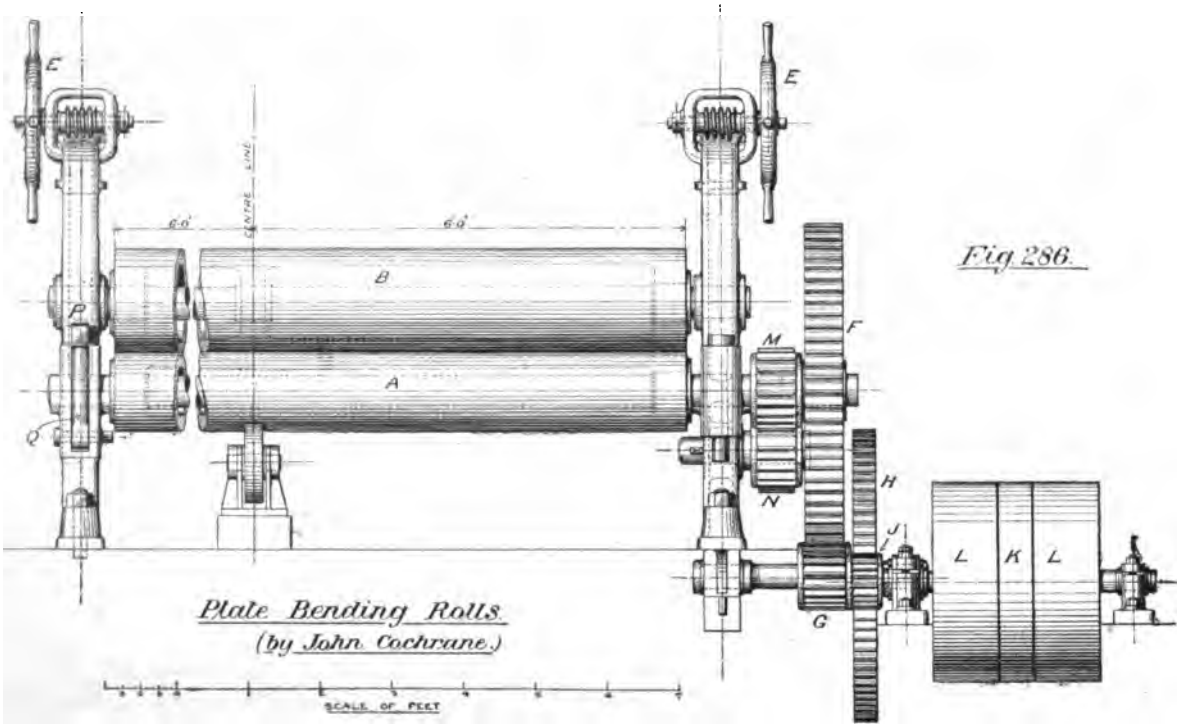

Fig 286.

Digitized by Google

powerful, consisting of wheels and pinions F G and H J, the last being on the driving shaft, while M M N connect the rolls. The pullies are driven by crossed and open straps, to obtain reversal, K being the fast, and L L the loose pullies, so that either strap may be put upon K alternately by a foot or hand lever attached to the forks (not shown). The plate to be bent is placed upon the rolls A A, B lowered till a grip is obtained, and the machine set in motion. When the plate has been drawn nearly through, the

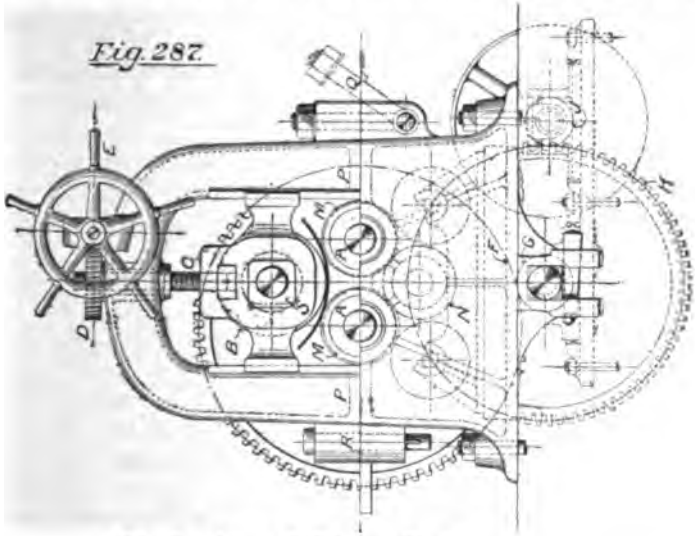

End view of Plate Rolls.

machine is stopped, and the wheels E E given a slight advance, the rolls then reversed, and the plate brought back, and these operations repeated until B is depressed enough to give the necessary curvature. When the plate is bent into an entire circle it cannot be released at the front; so the top of the standard is made separate at P P, and the bolt Q turned down as shown dotted, when portion P P may be swung round horizontally upon pin R, leaving the bush S upon the roller B. The plate may then be withdrawn. It should be noticed that the sides of the bushes are curved in plan to radii from the pin R.

Digitized by Google

Vertical rolls are often used for long, heavy plates, and are said to be less expensive in operation, while giving truer finish to the end of the bent plate. This last is the principal difficulty with all rolls, the entering edge, to six inches deep, being always set by bending while hot with wooden hammers. Except for this, the plates are never heated for rolling, even up to 1¼ inches in thickness, for in such cases the radius is proportionately larger. The weight of plate is eliminated by the vertical method, with less fear of obliquity of curvature. Long rolls are often slightly bellied at the centre, to take up spring. For the heavier plates an *hydraulic bender*, introduced by Mr. Tweddell, seems very likely to supersede rolls. It finishes the plates to a truer circle from end to end, and there is no limit to plate thickness, or risk of fracture by too rapid feed. Butt strips can also be bent truly to boiler curve. The tool is similar in design to the multiple punch in Fig. 284*a*, but the girders are placed vertically, and suitable dies inserted instead of the row of punches.

Plate-straightening rolls are similar in construction, but there are some four rollers at top, pressed down simultaneously by connected screws, upon three rollers at bottom, and the plate is passed through and through till truly plane.

Rolls for Section Bars (Fig. 288) have their axes vertical, and are placed upon a table A, which is sometimes conveniently set flush with the ground, with a pit for the gearing. They are driven by the usual fast and loose pullies F and L with crossed and open straps for reversal. These actuate a worm and worm wheel, B and C, and a spur pinion D on the axis of C gears with wheels G G on the roller shafts. Thus E E are the driving rollers, and H the bending roller, with a screw J to bring its bearing closer to the rollers E E, effected by turning the nut K. A ring or angle bar is shown bent to a circle with an outward flange—an inward-flanged ring being obtained by turning all the rollers upside down, and other sections by special rollers. Finally the ring is removed and welded with a glut-piece.

Flanging Presses.—It being always advisable to diminish the number of joints in a boiler, the end plate is usually flanged or bent over at the edge to form a ledge for the shell-plate, while stiffening itself considerably.

Digitized by Google

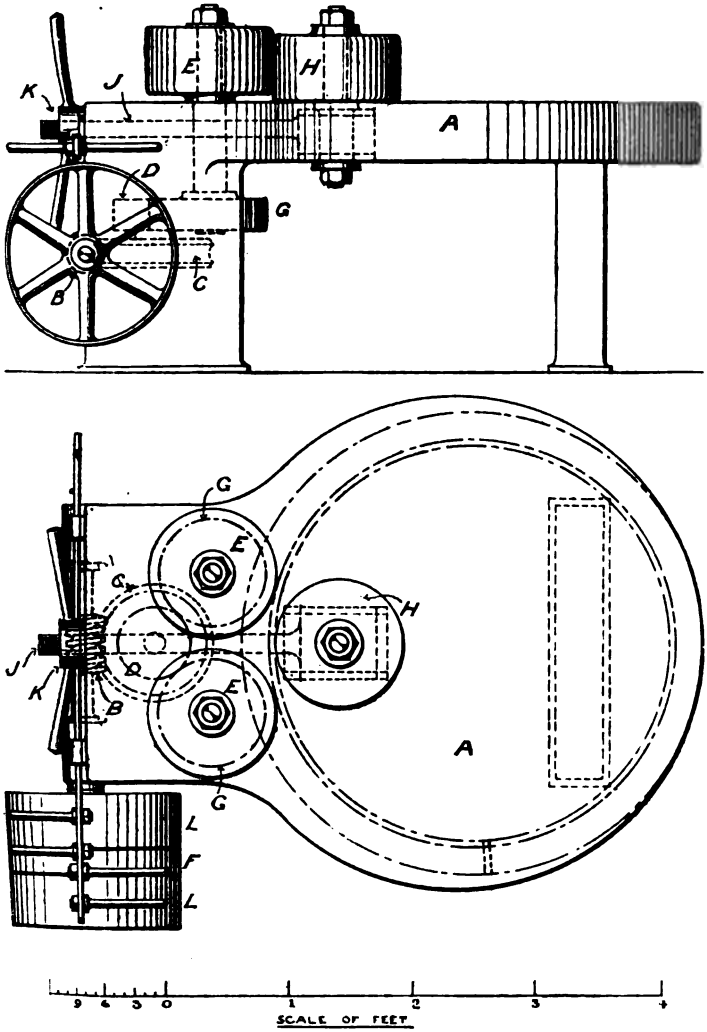

Angle-bar Bending Rolls.

Fig. 288.

Digitized by Google

Plates were formerly flanged entirely by hand, being moulded on cast-iron forms by blows from wooden hammers, as at Fig. 278. This method was slow and expensive, and two kinds of hydraulic presses are now used, (1) the 'Piedbœuf'* press for flanging at one heat, a very effective tool, but requiring separate dies for every separate kind of work; (2) the universal, or three-ram flanging machine, invented by Messrs. Tweddell, Platt, Fielding, & Boyd, and capable of either progressive or single-heat flanging. We will take these tools in order.

The **'Piedbœuf' Flanging Press**, on Tweddell's system, is shown at Fig. 289. It consists of an hydraulic cylinder A containing a ram B, which may be raised on the admission of water pressure, thus lifting the table C, on which is placed the lower die D. A girder E carries the upper die R, being supported by guides F F, provided with nuts for the adjustment of E. The girder G supports the central cylinder A, and four cylinders, H H, containing the 'vice' rams J; and as it is necessary to move the cylinders H H to varying distances from the centre, the pressure (or exhaust) pipes are trained through three-quarters of a revolution between their connections at the pipe circuit K K and those of the cylinder, so that the pipe is not strained materially when the positions of H H are changed; in addition there are sheaths L L to prevent snapping at the unions. The valve-box M has two hand levers; N for controlling the vice rams, and P for the flanging ram. The two dies are shown ready for flanging a tube plate Q, which has been made red-hot and laid on the lower die D. The vice rams are first advanced until the plate is held against the upper die R; then the flanging ram B is slowly raised and the plate made to assume the dotted form. The levers being reversed, the plate may be withdrawn. These presses are made large and powerful, but are not used for plates beyond 7 feet diameter, and rarely up to that.

Universal Flanging Press (Tweddell's system). — This very useful machine is shown at Fig. 290. There are two vertical rams, A acting as vice ram and known as the 'elephant's foot,' and B for flanging the plate on what is known as the 'progressive system.' A third and horizontal ram C gives the finish, and a

* Pronounced *peeaybuf*.

Digitized by Google

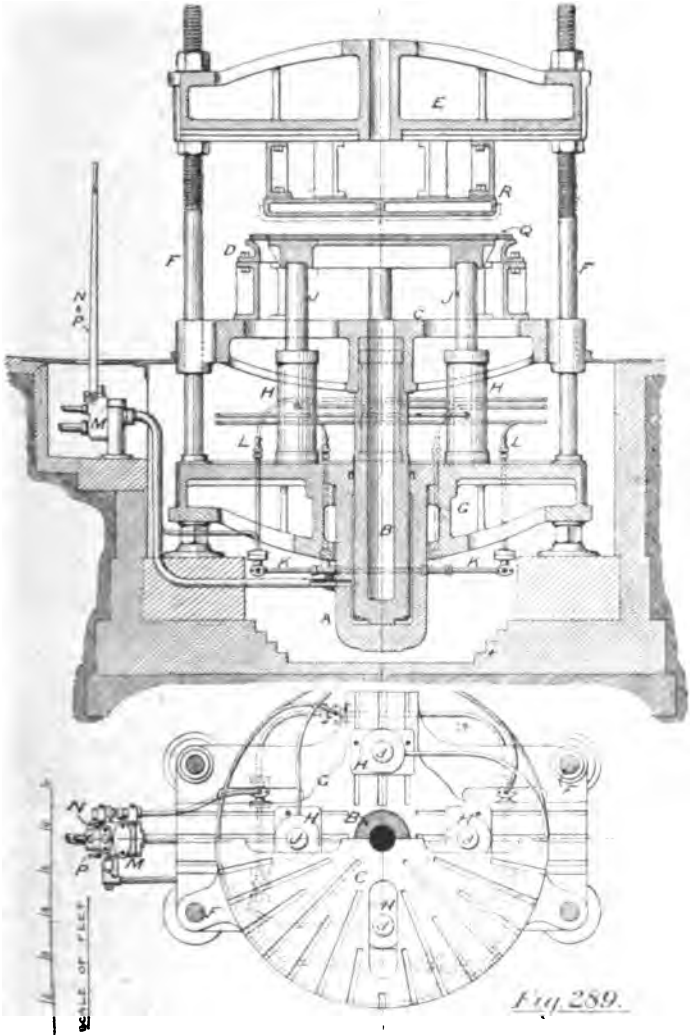

Fig. 289.

Hydraulic Flanging Press,

"Piedbœuf" pattern,

(TWEDDELL'S SYSTEM)

Digitized by Google

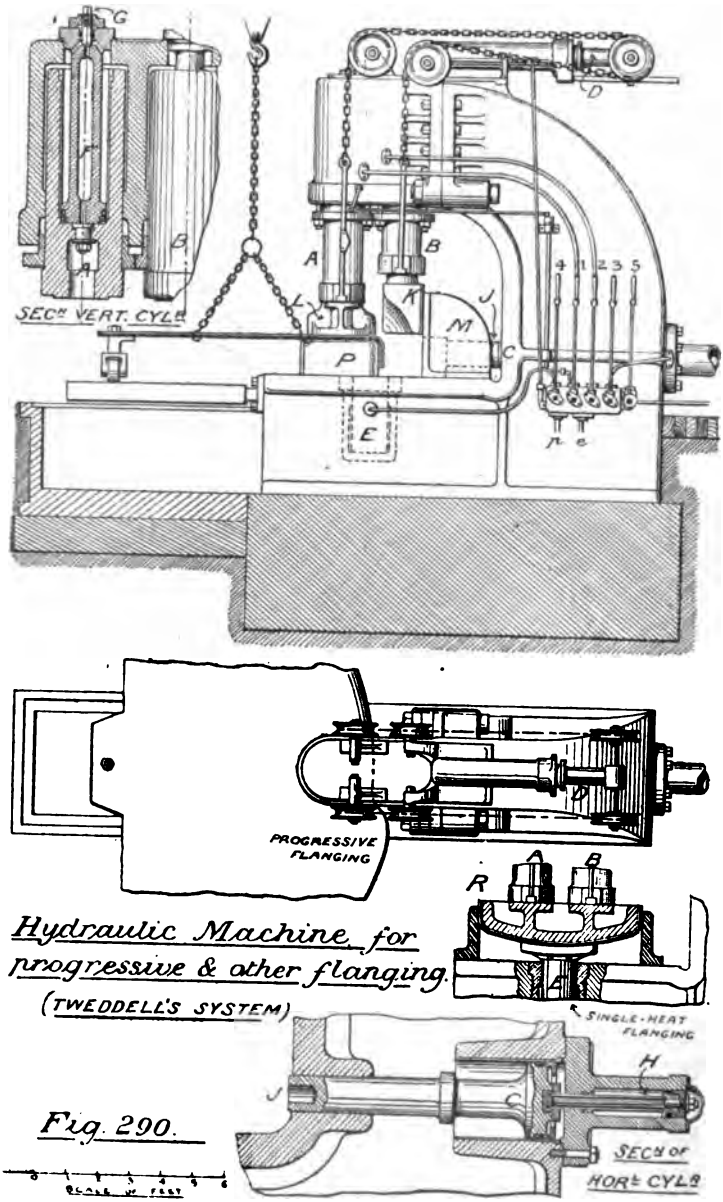

Hydraulic Machine for progressive & other flanging.
(TWEDDELL'S SYSTEM)

Fig. 290.

Digitized by Google

fourth ram D raises and balances the vertical rams A and B, having a constant pressure supply; so that the rams A and B only rise when opened to exhaust, one or other, or both. Yet a fifth ram E serves as vice during single-heat flanging. Referring to the enlarged sections, the ram A is seen to be hollow, riding upon a smaller fixed ram F. Ordinarily the water only enters the annular space round the small ram, but on releasing plug G it passes down the centre tube and then exerts a pressure on the whole area of the large ram, a variable power being thus obtained. The horizontal ram C is of piston form with a tubular continuation to a smaller piston H, upon which there is a constant pressure, so the return is effected when C is opened to exhaust. Any special forms of dies may be applied at J, K, and L, and the guide bracket M is removable. The valve-box has five levers, each working both pressure and exhaust, 1 for ram A, 2 for ram B, 3 for ram C, 4 for ram E, and 5 for an hydraulic crane to lift the plates (see A, Plate XIV.). A plate N is being flanged on the progressive method. It is slewed by crane, laid on a curved hearth (B Plate, XIV.), and heated for a few feet along its edge, then transferred to the block P and flanged as described, rams A, B, C being applied in succession. This is done foot by foot until the heated portion is all flanged; a new heat then taken, and the work continued as before. When flanging with complete dies, the upper die is fastened to the rams A and B, as shown at R, and the lower die placed on the table. The hot plate being laid on the lower die, the vice ram E is first raised and the upper rams then lowered; the flanging pressure is therefore the difference of that upon the lower and upper rams. Any kind of flanging can be performed by this machine by using suitable dies.

Drilling Machines, for boiler work, vary greatly in their construction. Except for the Radial machine they are all designed to drill 'in position,' and their form depends on the kind of work to be done. When possible they are made expeditious by the use of more than one drilling head, a necessity in view of the large number of holes to be drilled.

Radial Drill.—This has been already described at p. 167. Opinions differ regarding the best construction, but in almost any form it is an extremely useful tool for boilermakers. An inter-

Digitized by Google

esting example is shown in Fig. 291, designed by Messrs. Geo. Booth & Co. for performing a variety of operations. The circular table A, provided with worm wheel B, may be revolved whenever the worm shaft C is connected to the driving shaft D by belt; at other times it is stationary. A bracket E, fixed upon the bed of the machine, carries a tool F through the medium of the two slides G and H, each provided with hand wheel and screw, thus giving adjustment in both directions. When, therefore, a boiler end plate is fastened to the table through temporary rivet holes, and the worm gear connected up, the tool F serves to turn the outer edge, the usual back gear being seen at K. The power further passes through mitre wheels and vertical shaft within the pillar to the spur wheels L M, and thence through shafts N and O to the drill spindle, the feed motions being as previously described. The simple drilling done on this machine is the taking out of tube holes in the manner shown at B, Fig. 169; but large flue holes are made by using the head P and three cutter bars Q Q held by set screws with removable cutters, forming in fact a large pin drill. In all cases a hole is first drilled in the plate to receive the 'pin' and steady the cutter, and the radial arm R being long may be fixed to the bracket S when doing heavy work. But the most interesting feature to the student is the method by which large oval holes may be formed, such as those required as manholes. A short vertical shaft T is connected to the driving shaft N by gearing of 2 to 1, the same ratio as that of the bevel gear at U. At the lower end of T is an eccentric stud adjustable within certain limits, and a rod V connects this with the saddle. The shaft T making its revolution in the same time as the drill spindle, an inspection of the diagram at W shows that the cutter will be compelled, by the movement of the saddle, to mark out a true ellipse instead of the circle it commenced with, which will be understood by comparing the numbers; of course only *one* cutter bar can be used. The tube J may be turned round within the base X, for fine adjustment, by the worm gear at Y, but the position of the arm R is first roughly obtained by releasing the bolts Z Z. The lifting is effected by the screw *a*, driven from the central vertical shaft by spur wheels at *b*, reversed or put out of gear at will by the handle *d* moved horizontally. This machine

Digitized by Google

Fig. 291.

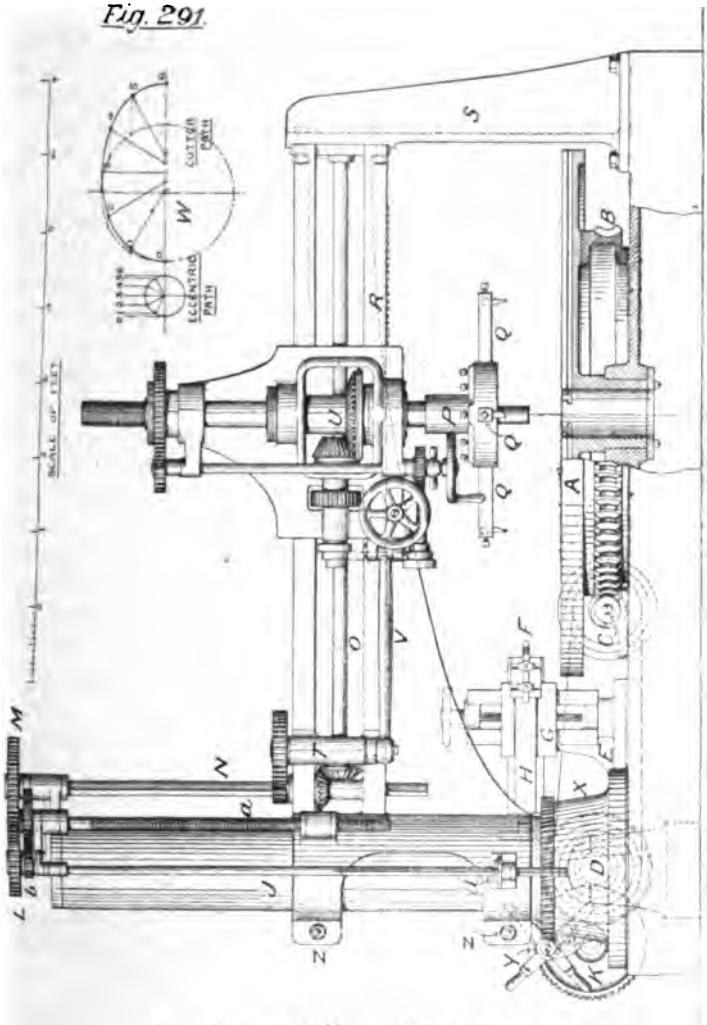

Radial Drilling Machine,
for cutting Flue holes, Oval Manholes,
Tube holes, etc.
(by Geo. Booth & Co.)

Digitized by Google

therefore can perform no fewer than four operations—flue-hole cutting, oval manhole cutting, tube drilling or other single drilling, and boiler-end turning.

Although the foregoing is a very useful, it is by no means a usual tool. The rotating table is more often placed on a bed by itself, constituting a *vertical face lathe.*

Drilling in Position.—The plates of a cylindrical boiler being prepared and temporarily connected, the rivet holes are drilled right through the several plate thicknesses. If stationary machines are employed they must be supplied with a cradle or bed on which to lay the boiler, so that the latter may be turned round on its axis, and thus present all portions of its surface at various times to the drill. Obviously there are two principal ways in which the axis may be placed, vertically and horizontally, the latter being used for large marine boilers, while the former is advantageous when drilling locomotive or Lancashire boilers, though it has also been employed for marine work.

Drills with Boiler Axis vertical.—Fig. 292 illustrates this type of drill: and its individual application (the drilling of rivet holes in the flanges of boiler flues), will first be described. The machine is the design and patent of Messrs. Geo. Booth & Co., and is very ingenious throughout. The flue is bolted, with its axis vertical and central, upon the circular table A, and a handwheel B, being connected to the table by bevel gear C and worm gear D, serves as a dividing plate, its revolutions being counted to turn the flue through any fraction of its circumference between each operation. The saddles E F ride upon vertical standards G H, and contain horizontal slides J K, for adjustment to various diameters. *l* is the driving cone, and power is taken from horizontal shaft L by mitre gear to the vertical shafts M and N: from these the various motions are obtained. Thus the spur gear and mitre gear at O and P give motion to the horizontal spindles Q R, and from thence by mitre gear to the vertical spindles S T, which turn the drills U U and V V by spur gear. The vertical movement of the saddles is given by hand or power. When by power, a worm on shaft N gears with worm wheel W, which actuates a second worm and wheel at X, connected with the screw Y by mitre gear. The mitre wheel on Y rotates within a boss cast

Digitized by Google

Boiler Flue Drilling Machine.
(by Geo. Booth & Co)

SCALE OF FEET

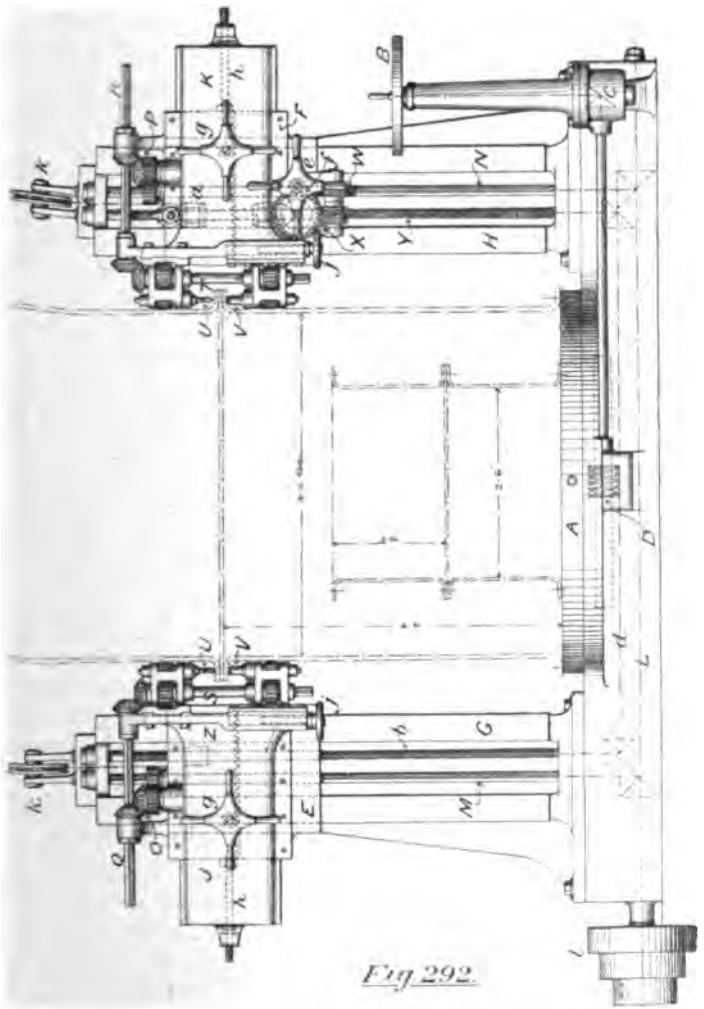

Fig 292.

Digitized by Google

on the saddle, and has a plain hole, the connection with Y being by key only. There are two nuts *z* and *a* upon the saddles, and the screws *b* and Y move simultaneously on account of their union by horizontal shaft at *d*. When, therefore, the driving shaft L is rotated in its proper direction, so also are the drills U U and V V, and a downward feed given to the saddle, as described. The raising or setting of the saddle involves hand gear, the capstan *e* turning the screws through pinion and spur wheel, and the mitre gear before mentioned: but although the spur wheel is keyed to its shaft, the worm wheel X is not thus secured, and is only in gear with the screw Y when *clamped* to the wheel *f*, while the nut *a* is carried in a socket, and is adjustable by mitre gear to alter the relative heights of the saddles. Horizontal adjustment is made by turning the capstans *g g*, each of which moves a pinion within a rack, and the bolts *h h* serve as adjustable stops. The drills themselves are worthy of notice. The upper ones, U U, are of the twist shape, but have a conical shoulder at the top, forming a countersinking bit. The lower drills V V are for countersinking only, and their feed, upward or downward, is obtained by hand wheels and screws *j j*. The saddles, somewhat loaded with all this gear, are coupled to chains passing over pullies *k k* to balance-weights behind. In drilling a flue fixed upon the rotating table, the saddles are raised by hand to approximate height, and advanced horizontally by the capstans *g g;* then the stops *h h* are set. The strap fork is moved on the countershaft and the drills rotated, while the feed wheel at X is clamped in gear. The hole being drilled to proper depth and countersunk, the feed is unclamped and the saddle raised to allow the bottom countersinking to be done by hand feed *j j*. Withdrawing the tools V V, the dividing wheel B is operated to turn the flue by the amount of the rivet pitch, and the next pair of holes drilled as before.

Shells of Locomotive boilers are drilled by machines similar in general build to that just described. A longer bed is needed, that the standards G and H may be advanced or separated by a tommy-bar applied to pinion and rack. An internal dog-chuck on the face plate grips the shell, and the dividing gear remains the same. The saddles are materially altered, being similar to those of the radial drill, Fig. 291, excepting that vertical screws

Digitized by Google

are applied instead of a rack. The drill spindle therefore lies horizontally, and might be represented by Q and R, but the screw feed on its other end replaces slides J and K. Some makers withdraw the drill by power, using a quicker speed.

The larger shells of Lancashire boilers may be drilled similarly, but are often slung vertically by travelling crane, and held against a pair of vertical standards, which support the drill spindle at a fixed height. Such a method is, however, less capable of rapid and accurate adjustment. If there are two internal and two external pillars, the holes may be drilled and countersunk on both sides at one operation.

Marine boilers are sometimes drilled with axis vertical, on a rotating table as in Fig. 292, but usually are either laid horizontally, or a portable drill is applied.

Drills with Boiler Axis horizontal (Figs. 293 and 294). —Plate XIII. represents a machine for drilling the shells of Marine Boilers while laid horizontally. It is designed and made by Messrs. Hulse & Co. The boiler is placed upon a cradle consisting of four disc rollers A A A A, which can be turned by power applied to the worm shafts B B, so as to bring any portion of the shell circumference in front of the drill. The drill standards C C, carrying the saddles D D, may be moved to various positions along the slide-bed E, and may also be adjusted, by turning on the hinges F F, so as to lie tangentially to the boiler, a condition *obtained* by the hand wheel and screw at G, and *tested* by the fork H, each of whose prongs should just touch the shell. There are fast and loose pullies at J, giving power through spur-wheels K to the principal shaft L, which forms a hinge-pin for the standards. Within the standard boss, mitre gear connects L with vertical shaft M, and from thence to drill-spindle N through the spur gear O and mitre gear P. The feed-screw takes its motion from the shaft at O, through mitre gear Q, cone-pullies R, worm and wheel S, and mitre wheels T; and the saddle may be raised or lowered by the hand-wheel U, the screw being turned as in Fig. 292. The hand-wheels V V act upon a vertical shaft through worm gear, and thus turn a pinion within a rack on the inside of the bed for adjusting the horizontal position of the standards. The shaft L, besides driving the drills, also rotates the rollers of

Digitized by Google

the cradle. Bevel wheels W X connect L with worm gear at Y, and the worm shaft Z moves the shafts B B in its turn through mitre gear at *a*. The drills are put in or out of gear by clutch handles *b b*, and the clutches at *d d* turn the cradle rollers in either direction according to whether W or X is put in gear, while a central position of handle *e* puts them out altogether. After adjusting the standards by means of G and H, the drilling proceeds as usual, the outer countersinking being done at once by the tool, 21*a*, Fig. 316, while the rosebits, 21*b*, are used for the internal countersink and changed at each drilling. When two boilers are drilled at once, the coupling at *f* is disconnected, but if one long boiler is being operated, the rotating gear must act as one.

So much for the shell. The front and back of the boiler, so far as the seams are concerned, are drilled by a machine of similar appearance, but the standards are rigidly vertical instead of being hinged, and the cradle is turned through a quarter circle in plan; that is, the front of the boiler would be seen in Fig. 294, while the side view would appear at Fig. 293. When the lower seam has been drilled, the boiler is rotated through half a circle until the upper seam comes into position, the other holes having been previously taken out under the Radial Drill.

Portable Drill.—This machine being much less used than formerly, we shall only briefly notice it. It exists under two types—the bracket or standard type, bolted to the plate through holes already drilled by it; and the slung type, well represented by Borland's Drill in Fig. 295. In either case the driving gear (by rope) is similar. Referring to the figure, A is the driving shaft, and the cord is held taut by weight B, while the power is taken off by pulley C. An endless catgut band D drives the drill spindles in opposite directions, and the feed is given by worm gear. Being slung within the boiler, two opposite holes are drilled at once, the one pressure forming a reaction to the other. The feed is supplied either automatically or by hand, and the machine is capable of drilling shells 9 ft. in diameter. The safety chain avoids accidents in case of breakage of the rope.*

Multiple Drill.—In addition to the machines already described, there is one—the Multiple Drill—which has always

* See previous remarks on portable hydraulic drills, page 289.

Digitized by Google

Digitized by Google

PLATE XIII.

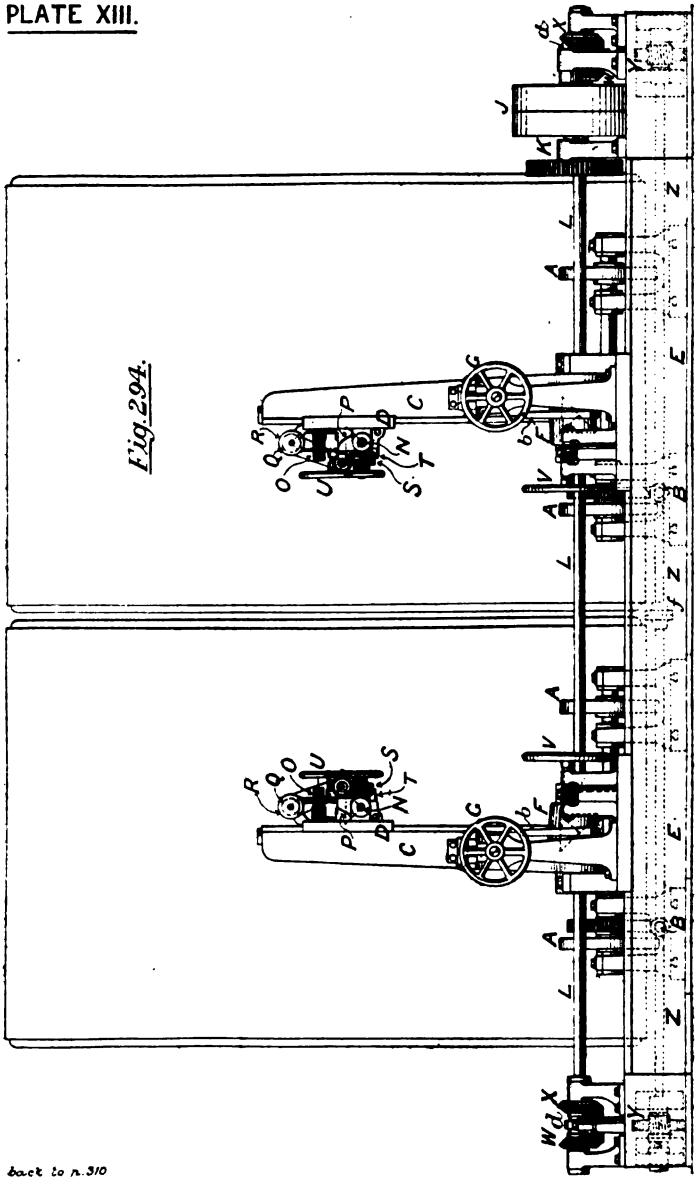

back to n. 310

Digitized by Google

DRILLING MACHINE FOR MARINE BOILER SHELL

(by Hulse & Co.)

SCALE OF FEET.

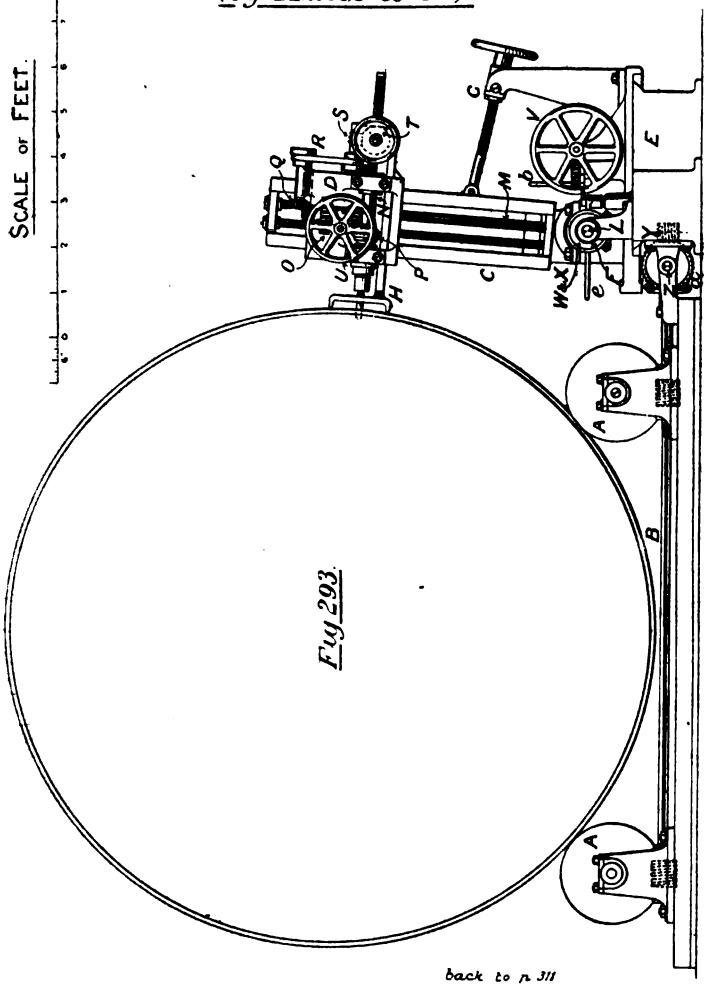

Fig 293

back to p. 311

Digitized by Google

Digitized by Google

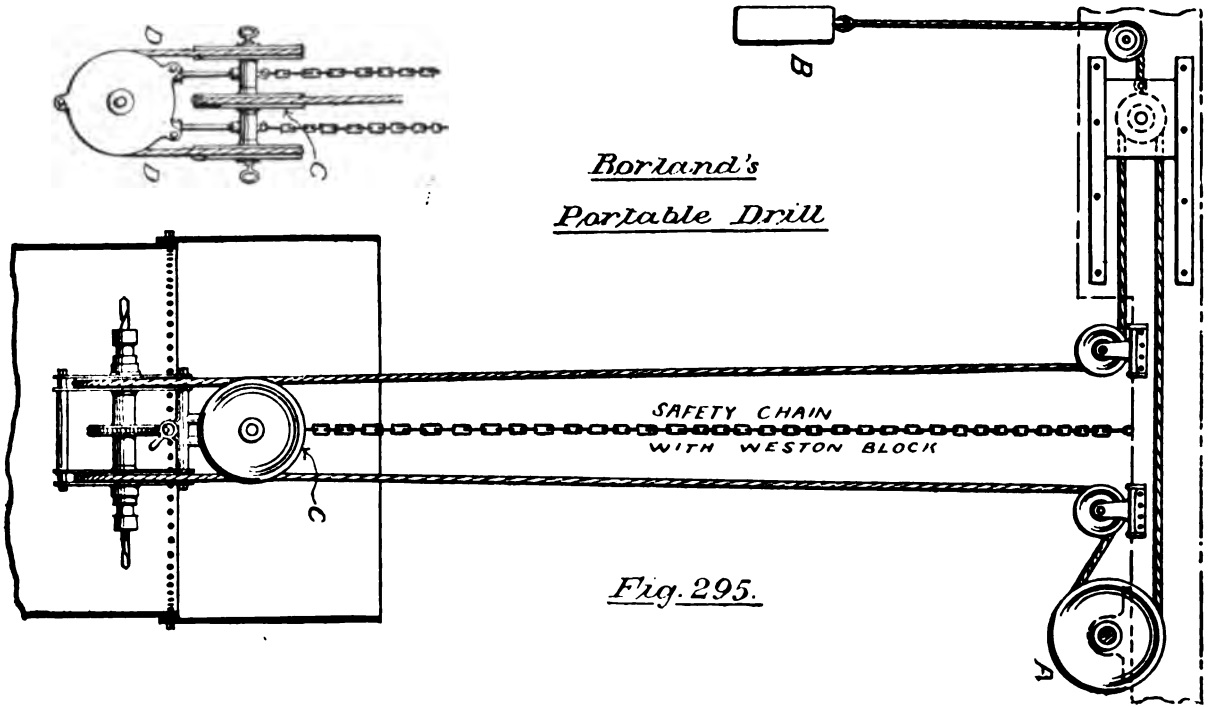

Borland's

Portable Drill

Fig. 295.

Digitized by Google

proved of great service for firebox work. Its modern form is shown in Figs. 296 and 297, Plate XIV., as originally designed or some of the Irish railway shops, and made by Messrs. Hulse & Co. With it six stay-holes can be drilled at one operation, or each drill employed separately at will. If a plate only is to be operated on, it is laid on the high table A, but if the firebox is previously built up, then A is removed, and the lower surface B, of the trolley, used instead. The trolley is run under the drills either by a hand wheel placed on the square at D, to turn the hind rollers through bevel gear, or by spokes at C which rotate a pinion *a* within a rack E, one method or the other being variously convenient. F is the cross slide, raised or lowered by the screws G G, coupled by horizontal shaft H; and the drill brackets J J are moveable along the slide by the application of a 'pinch-bar' to the ridges at K. L is the driving shaft and M the feed shaft. They are connected by the feed gear, viz., worms and wheels at N and O; and the feed shaft is provided with levers P P, attached to the drill spindles by links at Q. The drill spindles R R are driven from L by bevel gear S S, and the springing of the two shafts L and M is prevented by the brackets J J, which support them both. The bevel wheels on the spindles have clutches T T, actuated by the balance handles U U, so that any or all of the drills may be put in gear at will. The balance weights V V are attached to the levers P P, to relieve the weight of the drill spindles, and the set screws W W are tightened against the rod X to *fix* the centres of the drills after adjustment. If only some of the drills be required, clutches T T are disconnected and the drills withdrawn, feed gear being stopped entirely by releasing the clamping handle Y, which unites the fixed plate Z with the loose worm wheel O. The method of operation, then, is to (1) lay the plate on the table in position, and bring the work under the drill by turning the spokes C; (2) adjust cross slide F for height, and drill brackets for centres by pinch-bar at K; (3) fix by set screws W W; (4) start shaft L, and pull down the clutch levers U U; (5) bring drills down to work by handle *b*; and (6) put feed motion in gear by clamp Y.

The drilling being done, unclamp the feed, raise drills by handle *b*, change the strap to loose pulley, and set to another row

Digitized by Google

PLATE XIV.

MULTIPLE DRILLING MACHINE

(by Hulse & Co.)

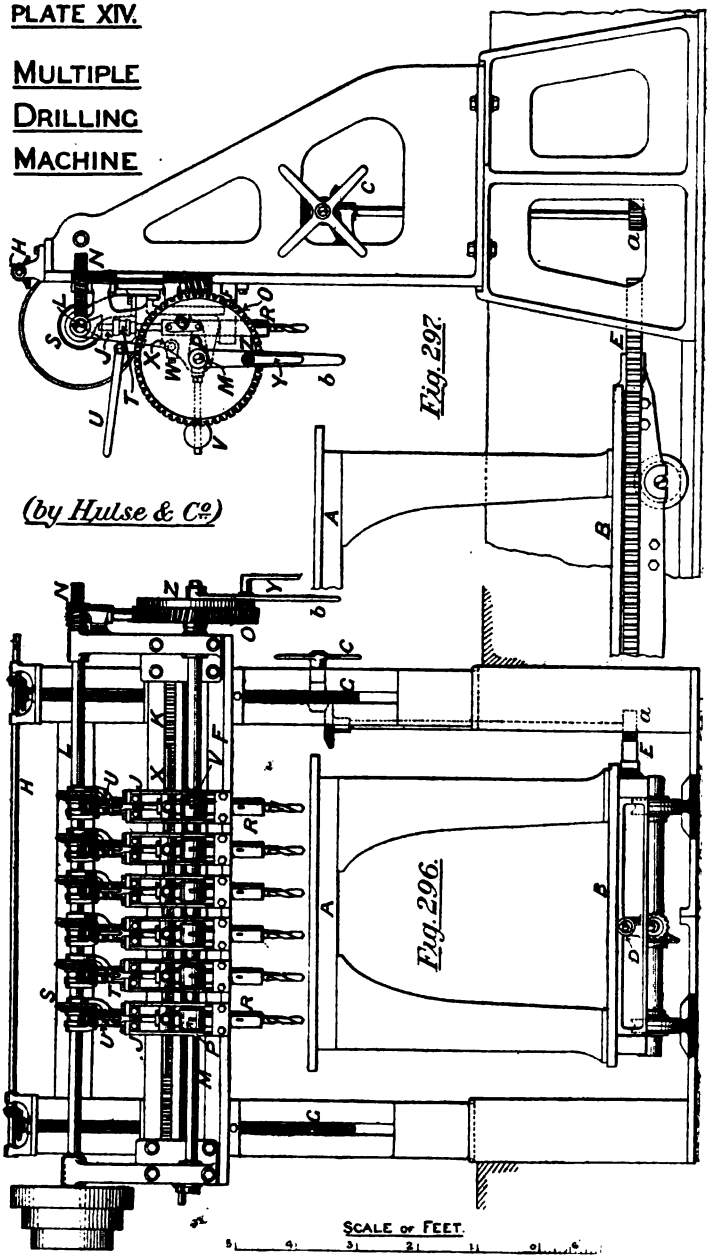

Digitized by Google

Digitized by Google

of holes. Considerable economy results from the application of this machine, which is very well designed in Plate XIV.

Summing up, the great desiderata in boiler drills are rapidity of adjustment and withdrawal of tool, and where possible the introduction of multiple drilling.

Hydraulic Riveting Machines.—It is to Mr. Ralph H. Tweddell that the honour of introducing hydraulic riveting properly belongs. No other method is now used, if we except recent pneumatic and electric contrivances, which are not as yet much employed: but steam riveting is entirely obsolete. The advantage of hydraulics for riveting is very great: it is a power that can be conveyed to great distances without appreciable loss, it can be stored till wanted, and the steady and known pressure on the rivet-head, coupled with the increase due to absorption of the momentum of the accumulator weight at the moment of closing, is just the action most desired.

Large Fixed Riveter. — This machine, on Tweddell's system, is shewn in Fig. 298. The standards A and B are securely connected by two bolts at C, and well designed to resist the stresses caused in closing. A supports the cylinders, while B serves as 'dolly,' carrying the tail cup M, and presenting a nearly flush top surface, for the purpose of getting into corners. The riveting cylinder Y, carrying the heading cup, rides upon a fixed ram T, and within Y is placed the ram U, which advances the annular plate-closing tool V. The auxiliary ram X, of piston form, receives pressure on either face for advance or return: and the tank D, placed 20 feet above the top of the machine, supplies the cylinders T and U with low-pressure water. The pipe E carries this water to cylinder T, and the branch pipe R passes to U, the check-valves Q and S in each case preventing return excepting through the exhaust pipe L. The latter communicates with each of the piston valves, P, O, N, as does the pressure pipe J; P being connected to the back end of the cylinder X, through the pipe *a*: O with the cylinder U through pipe Λ: and N with the cylinder T: while *b* is a constant pressure pipe connecting J and the front end of X. K is a stop valve, and *z* an overflow pipe.

We can now understand the action of the machine. The

Digitized by Google

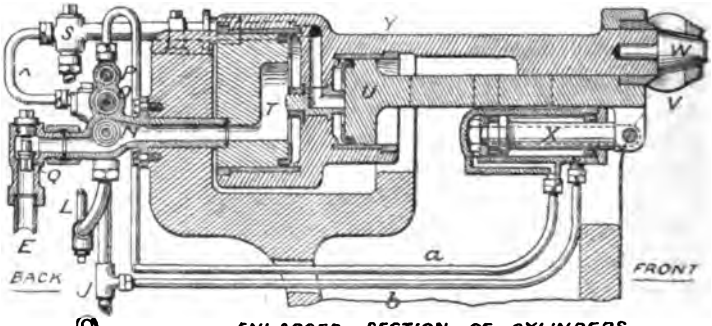

ENLARGED SECTION OF CYLINDERS

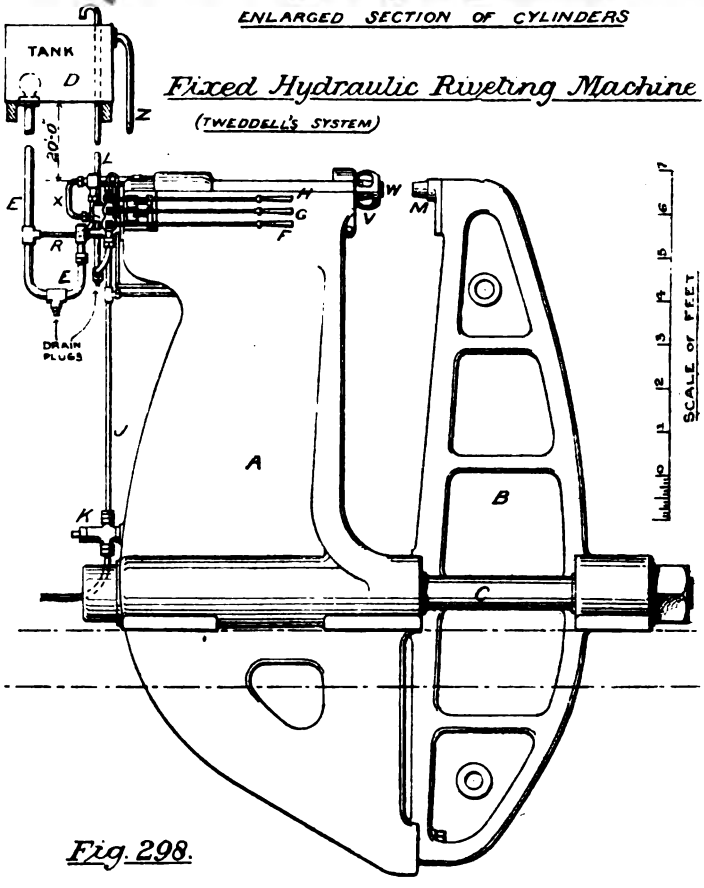

Fixed Hydraulic Riveting Machine

(TWEDDELL'S SYSTEM)

Fig. 298.

Digitized by Google

boiler seam being placed between W and M, the rivet heated and put in from the side M; lever H opens valve P to pressure, and a right-hand advance is given to the ram X, due to the difference of area of its faces. This pressure, assisted by the head of water passing from the tank, through the check-valves Q and S, carries forward parts U and Y. When W and V reach the rivet and plate respectively, lever G admits pressure water at O through pipe A, to advance the ram U, thus pressing the plates firmly together between tools V and M. And now valve N is opened by lever F, and pressure given to T in turn, thus bringing forward the cylinder Y and the cupping tool W to close the rivet, the pressure obtained being due to the difference of areas of the rams U and T, part of the water from U passing into T through pipe J. The pressure should be kept on the rivet until it cools somewhat, to secure a tight joint, and the three levers are then moved to exhaust, when the pressure *b* pushes back ram X, bringing U and Y to normal position, and lifting the water up L into the tank.

Fig. 298 shows all the latest improvements introduced: the plate closing (in 1880) and the use of low pressure water to fill the cylinders (in 1890). The latter is very interesting, and greatly economises high pressure water, which is only used as a film on the back of the tank water, as it were, the fluid being practically incompressible. The plate-closing apparatus prevents 'collars' being formed on the rivet between the plates. In a 100-ton riveter, 60 tons are applied for cupping, while the remaining 40 tons hold the plates together, but ultimately the whole 100 tons is applied to the rivet-head and plates.

Portable Hydraulic Riveters.—Although Mr. Tweddell introduced hydraulic riveting in 1865, his invention of the portable machine did not occur till 1871, since which date Messrs. Fielding and Platt, who then took up its manufacture, have been associated with him in the design of nearly all his later hydraulic machine tools. There are two forms of the portable machine known as the 'Direct Acting' and 'Lever' types respectively; their present construction being shown in Figs. 299 and 300. Referring to the former, frame A is a rigid casting, supporting a cylinder B with direct-acting ram C. There are three

Digitized by Google

diameters on the ram; C and V to obtain two powers, while W acts simply as guide for the cupping tool F. When the smaller power is required, water pressure is admitted to the annular area D, but if plug E be unscrewed it acts also on the back of C, the pressure then being due to both areas C and D. K is the valve box, containing the piston valve Q, capable, by means of the passages within it, of connecting the annular chambers N and M, or of opening M to L, where the pressure-water enters. G is the returning ram, upon which a constant pressure is exerted through pipe H, and space N communicates with the exhaust pipe J. The handle P acts on the valve lever O, so that if the latter be moved to the left, space M is uncovered and pressure-water enters cylinder B; but if O be moved to the right, spaces N and M are connected, and the cylinder water passes out to the exhaust pipe. The machine is slung by chains R R from a pulley T, provided with worm gear; by turning which from the hanging chain T, the frame may be set at various angles to the vertical within the plane of the paper. Studs also are fixed on the frame at the centre of gravity of the whole, on which are placed the slinging pieces X X, and the worm gear at S turns the frame in a plane at right angles to the previous movement: universal adjustment being obtained by the combination of the two motions. The space between the cupping tools may be adjusted by the insertion of longer or shorter dies, or by packing collars; and the method of riveting needs no further description.

Taking now the lever machine at Fig. 300; A and B are the levers, the first carrying the piston E and the second the cylinder D, while both are connected by the pin or fulcrum C. To avoid another joint the curved cylinder was devised by Mr. Fielding, as well as special tools for its perfect machining: two enlarged sections of it are shown. The pressure pipe is coupled at J, where a sheath attached to the union preserves the pipe from injury by sudden bending, and the movements of the machine are not interfered with, for the water passes through a swivel joint at K, through the coiled pipe M and the swivel N, then through the pin at N and the arm Q to the fulcrum pin; another swivel R and a short pipe T connecting C with the valve-box. U is the exhaust pipe, led away as required, and the piston valve H is

Digitized by Google

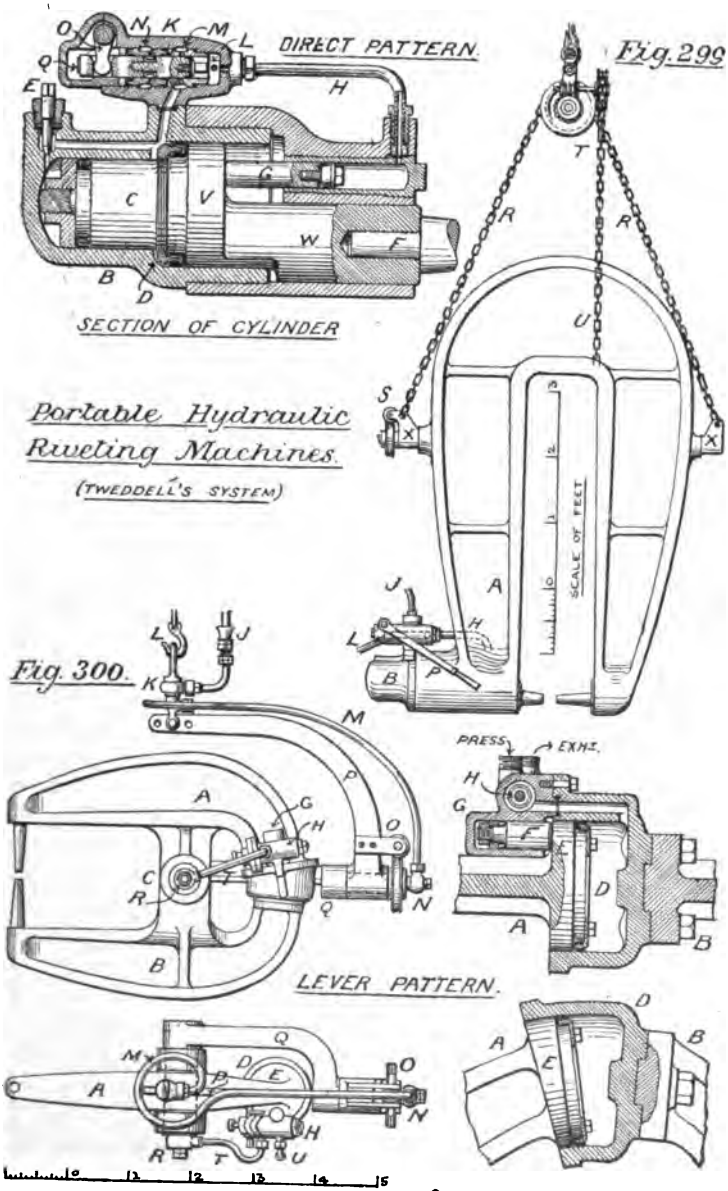

Digitized by Google

moved by a lever (not shown), to open the cylinder to pressure exhaust; while a constant pressure passage from T communicates with cylinder G, so that the small ram F brings back the piston whenever D is opened to exhaust. The fulcrum is at the centre of gravity of the whole apparatus, and the levers are supported directly by the arm Q and secondarily by the arm P, in such way that they may be swivelled upon centres C, N, or K, securing perfect adjustment to suit the work. The worm gear O fixes the position round the axis N, and the drawing shows the latest method of hanging this riveter.

The choice of one or other of the machines described depends upon the nature of the work. The direct-acting machine has the advantage of rigidity, but the lever machine can be applied more easily, and reaches more rivets, being therefore useful where the character of the work is constantly changing, and the rivets less accessible.

We may now direct the student to Plate XV., which shows Tweddell's system of Hydraulic Machine Tools applied in a Locomotive Boiler Shop. A is a Fixed Riveter, similar to that in Fig. 298, but without plate closer. The handles at S work the crane B, which lifts the boiler: D being the lifting cylinder, C the slewing cylinders, and E the traversing cylinder, each supplied with multiplying gear. F is a smaller crane, where the jib is lifted direct from the cylinder. K is a crane for portable riveter, the trolley J having a ram for vertical adjustment of riveter, the horizontal position being obtained by hand. The pressure pipe on K is jointed for horizontal movement of J, and the pipe at L coiled to give spring during vertical movement. Of the portable riveters, G and N are of the 'bear' type, the former having one and the latter two supporting arms; P and Q are ingenious applications of this type, and R is an example of the 'lever' form with very long levers. The small 'bear' at L, H, and M has been devised for fireholes and foundation rings, being swivelled from two arms, and the toggle gear at O adapts the fixed riveter to firebox crowns. T is a Forging Press for stamping purposes, and U the 'Piedbœuf' Flanging Press, detailed at Fig. 289. Crane F is used with this press, and the Travelling Crane W covers the centre aisle of the shop. The striking difference of the crane

Digitized by Google

PLATE XV.

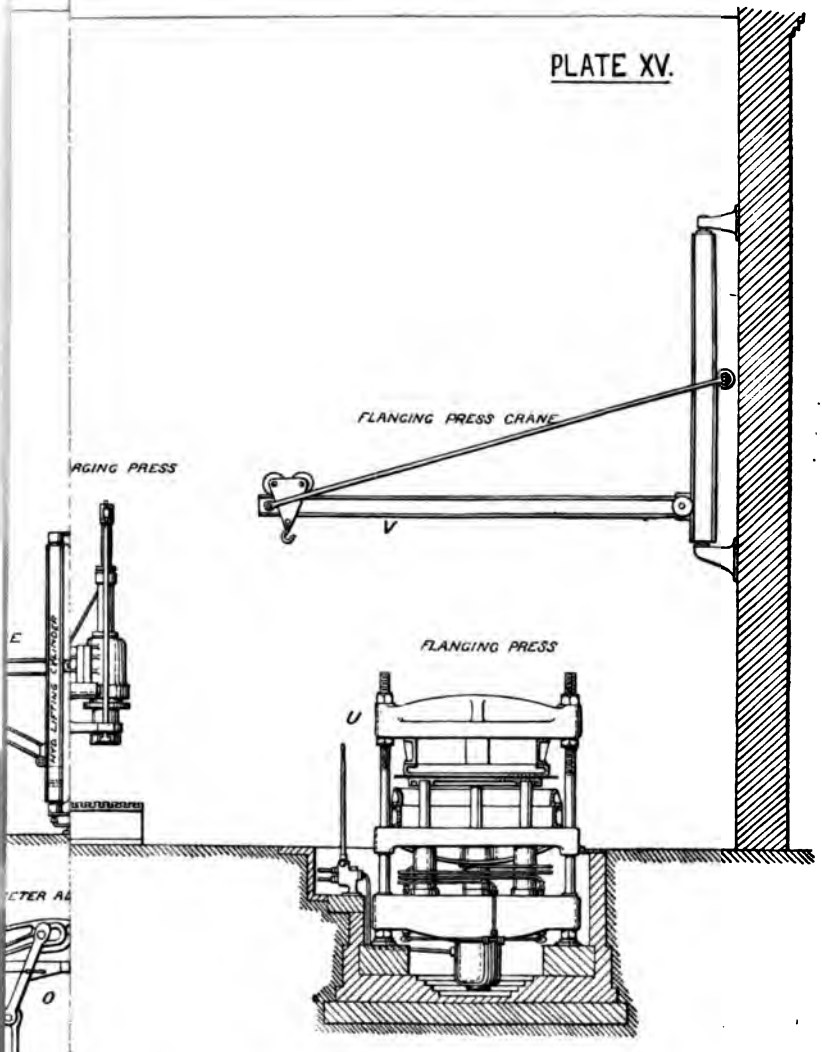

face p 318

Digitized by Google

Digitized by Google

required is very apparent, the importance of ample provision for lifting being a point upon which Mr. Tweddell constantly insists.

Plate XVI. represents the interior of a Marine Boiler Shop. B is a Stationary Riveter, exactly as in Fig. 298, and a circular pit C admits a large marine boiler when riveting. As it is difficult to obtain nicety of vertical movement in the travelling crane D, an intermediate cylinder or Hydraulic Adjuster, E, forms a very useful adjunct. The Progressive Flanging Machine F was shown at Fig. 290, and the crane A lifts the plate to or from the fire. A plan view of the latter is given at G, where the dotted lines show the plate being heated. H is the Locomotive type of Marine Boiler, much used for the smaller boats, the riveting of which is performed as in Plate XV. A Marine Boiler is given at J, having the furnace mouth riveted round with a small bear K, which also joins the 'Adamson' flues at L. At M the boiler is being closed by a powerful bear-type machine, having plate-gripping tool, and hung from the travelling crane through the medium of the adjuster N. The last-finished flange is here turned outward, as advocated by Mr. Tweddell, to secure good machine riveting throughout; but as many makers prefer an internal flange, to save cargo space or reduce weight, the riveter at P has been recently devised. It is slung from its centre of gravity, and the free arm lowered into the boiler, as shown dotted. When raised, the latter serves as 'dolly,' and can be adjusted in length to suit various diameters of boilers. A hole must be left at Q, to be covered afterwards by the plate carrying the central nest of tubes, the final riveting of which is performed by hand.

The diagram in Fig. 301 shows the arrangement of hydraulic tools on Tweddell's system applied to Shipbuilding. A is a keel riveter, supported by parallel motion and balance weight, so that it may be raised or lowered to reach the keel in any position, yet remain with jaws vertical. The gunwale riveter at E is similar in construction. H shows a small travelling jib crane, carrying a direct-acting machine for riveting the combings of hatchways. J and K are hydraulic winches, and G a punching or shearing machine. D is another jib traveller carrying the large lever riveter C for finishing the double bottom, and the machine B, supported by a crane with two movements, is for riveting the keelson. A special carriage F

Digitized by Google

carries the stringer plate-riveter, and J is the pressure main which supplies all the machines through flexible copper piping. This arrangement is now carried out at many shipyards, and the drawing explains the advantages of portable riveters more clearly than

Fig. 301.

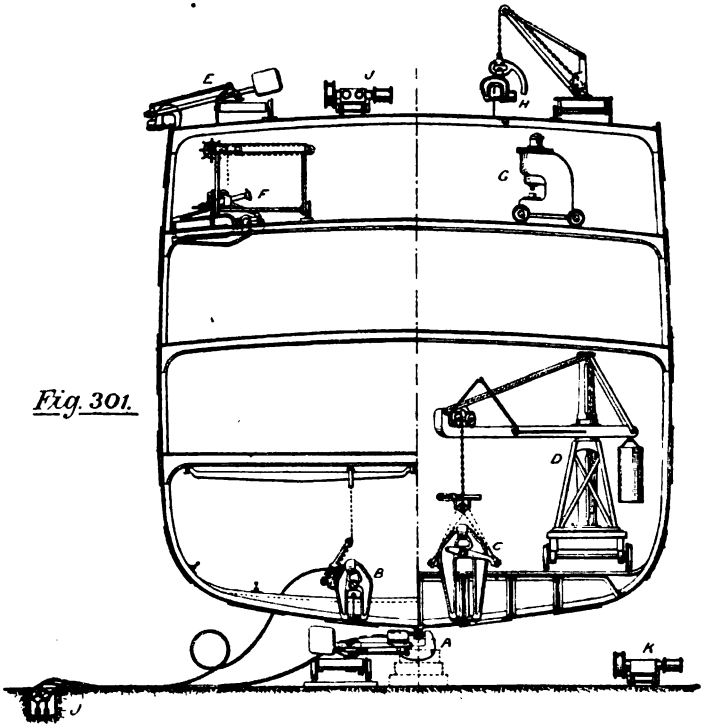

Section of a Ship in course of construction, shewing Tweddell's Riveters in operation.

would pages of description. Indeed, the Forth Bridge, all the great bridges of India, and the Tower Bridge, could not have been riveted up without these wonderful machines.

The pressure used in the hydraulic mains for boiler shops, &c., is usually 1500 lbs. per square inch, but is sometimes exceeded, being often 1700 lbs.

Digitized by Google

PLATE XVI.

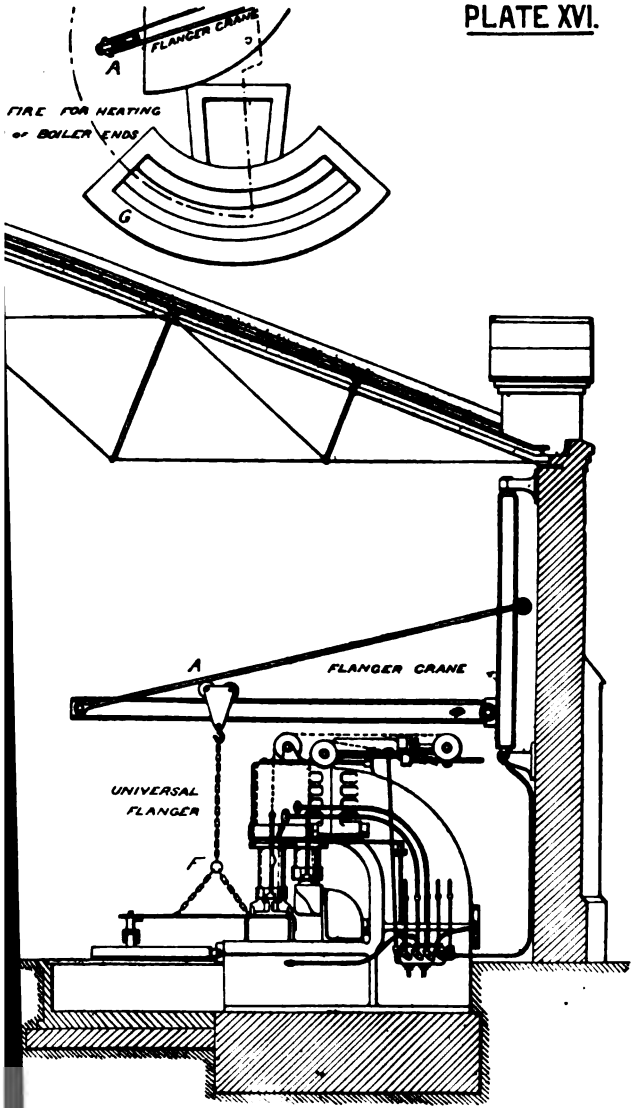

face p. 320.

Digitized by Google

Digitized by Google

Comparative Speed & Cost of Hand & Machine Riveting (TWEDDELL)

Letters A,B,C,D &c. indicate the results from various shipyards

Fig. 301a.

Digitized by Google

Pneumatic Caulker.—This, an American invention, was first introduced in 1890. As shown in Fig. 302, it is being made by Messrs. Crossley Bros., and is said to do the work of three or four men. E is a jacket held in position by the cylinder J, screwed into the nose-piece F. The caulking chisel G is loose, but placed within F when required. The piston contains a piston valve P, vibrating at right angles to the piston's axis, the slide hole being closed by slips O O, dovetailed into K. The starting valve R, when in the position shown, allows the compressed air, after entering at L through a strong indiarubber tube, to pass through the piston by T and U, then harmlessly out by the passages V and W; but if R be pressed down the passages V W are closed and the machine operates in the manner to be described. Key X allows the piston to slide vertically, but prevents axial rotation. Y is a passage from T to the piston, and T and U being formed by flats in S, are not in communication with each other. There are two passages from the piston to U, seen in plan at z z_1, while in the piston itself one passage j communicates with the top of the cylinder and another h with the bottom. In addition, two holes d d_1 are made in the slips O O, and grooves e e_1, f f_1 are in connection with these holes at certain times. One other point must be noticed—the hole g is the exhaust outlet when in working order, but M fits the hole in the nose-piece so that air cannot escape when the piston is at the bottom of its stroke. If, however, K be lifted to the top position, M will be found just of a length to disclose an annular space round the curvature N, and the air is free to pass out at g.

Having noted all the parts, we can now describe the working of the tool. The workman, after placing the chisel G in the nose-piece, holds the former with his left hand against the seam of the boiler as at H, while with his right hand he grasps the boss S, pressing the head R upon it, thus practically closing the passage U. The air passes through T and Y, but cannot get further. Hole d_1 is now in communication with passage e, however, so the air enters the valve chamber from the right and moves P to the left. This allows the pressure to act through h on the bottom of the piston, and the up stroke is made. While this air exhausts at g, the hole d, being now in communication with f, the valve is

Digitized by Google

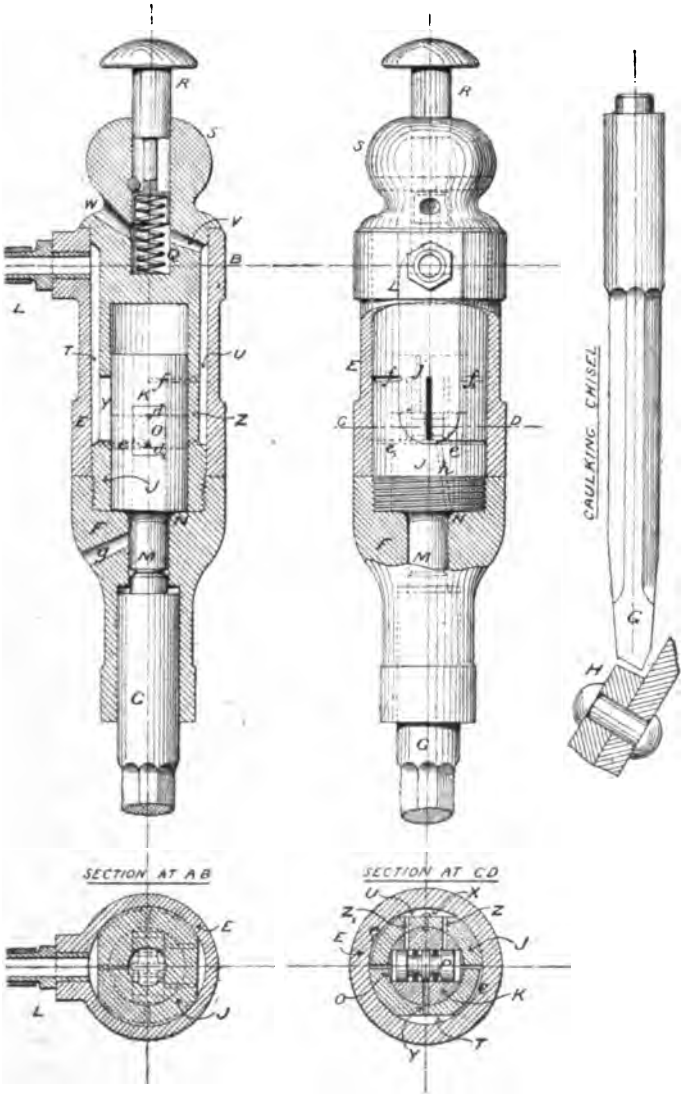

Pneumatic Caulking Tool.

Fig. 302.

SCALE OF INCHES

vibrated to the right, and the pressure air passes through *j* to the top of the piston, bringing the latter down again. Once more P is moved to the left, and pressure exerted on the bottom of the piston; but the imprisoned air at the top must escape somehow, so it passes through z_1 to U, using the latter as a receiver, the contents of which are exhausted when the piston again reaches the top position, and Z is in communication with *h*. The air pressure is from 10 to 50 lbs. per sq. in., and a free blow is given the tool in the downward stroke, while the piston is cushioned by the imprisoned air at the top on the upward stroke, making it easier for the workman to hold the tool. e_1 is a relief at one end of the valve, while air enters at the other end through *e*; and f_1 bears the same relation to *f*. (*See Appendix IV.*)

Tube Expander.—Boiler tubes must be sufficiently ductile to withstand the rough treatment to which they are subjected. The earliest metal employed was copper, but that was expensive. Brass is now extensively used for the smaller, and mild steel or wrought iron for the larger tubes. A new material, 'Red Metal,' is being introduced, and appears to possess excellent properties, being intermediate between yellow brass and copper. In all cases, as a test of fitness, the material must allow of being doubled up, and having the ring enlarged till capable of slipping over a tube of the original diameter. The treatment which tubes receive in the boiler shop consists in their expansion to fit tightly in the tube-plate holes, and beading at the fire-box end. Although large tubes are often lap-welded, smaller ones are *solid-drawn*, or forcibly rolled upon a pointed mandrel, as in Fig. 303, the latter being long enough for the whole tube. The process reduces the ductility of the material, so the tube ends must afterwards be annealed, while the rest of the tubes should be perfectly straight and uniformly elastic.

A Tube Expander is shown in Fig. 304. A is the smoke-box tube-plate and tube: B the body of the tool: C three rollers dropped in between B and the cover-plate D: E an adjustable gauge to fix the position of the rollers with respect to the tube-plate: and F a taper mandrel provided with a tommy bar G. The action is simple; the rollers are rotated by rod F, which is at the same time pressed forward till the tube is well expanded to fit the tube hole. Mr.

Digitized by Google

Manufacture of Tubes

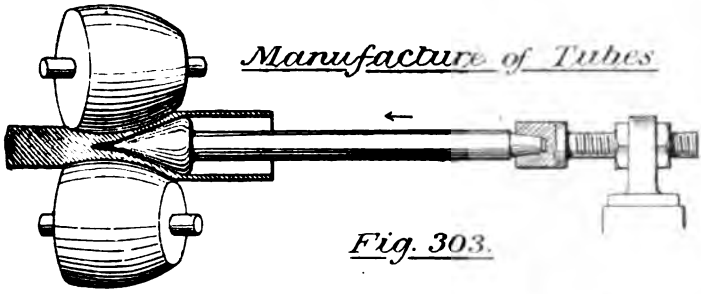

Fig. 303.

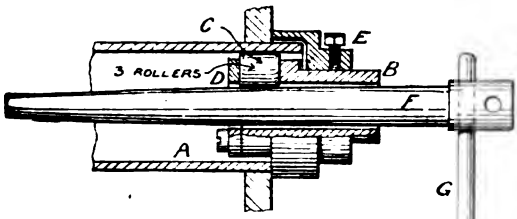

Fig. 304. Tube Expander.

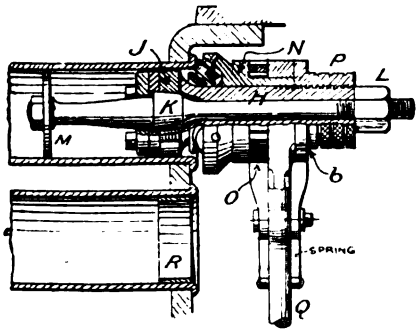

Fig 305. Tube Beader.

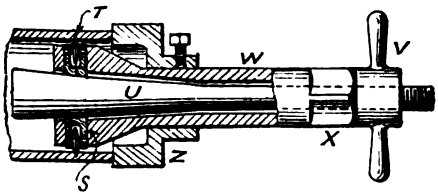

Fig. 306. Tube Cutter.

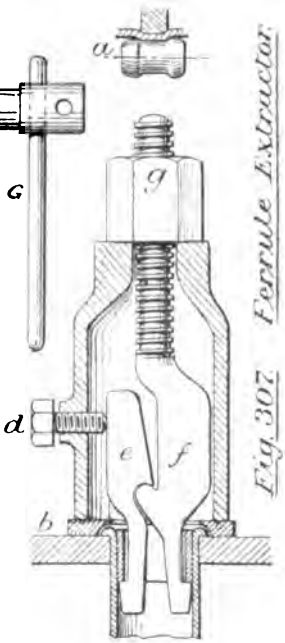

Fig. 307 Ferrule Extractor.

Digitized by Google

Yarrow recommends the roller shown at *a*, and advises that the hole in the tube plate should be rimered to the same taper as the mandrel F.

Tube Beader (Fig. 305).—H is the body of the tool, containing three jaws at J capable of sliding radially, and moved outward by the taper part of bolt K when nut L is tightened up. This is done when the beader is put in place, the disc M serving as steadiment. The collar N holds three rollers, placed at such an angle as to do the work efficiently, and a ratchet wheel O is keyed to N. P is the feed nut, and the ratchet arm Q rides loosely on N, the latter being driven by Q, like the drill in Fig. 215. But there is one depression *b* in the rim of the feed nut P, so that when Q has, by its vibrations, brought N round by one revolution, the feed nut is automatically advanced by a small amount. The firebox ends of the tubes being excessively strained by the great variations in temperature there occurring, beading protects the joint, while the ferrule R, in addition, secures the rigidity not obtainable by simple expanding.

Tube Cutter.—As it is impossible to gauge the length of the tubes accurately beforehand, the tool at Fig. 306 becomes necessary. Three bearings S S S, capable of radial sliding, support hard steel discs T T T, which are the cutters. The tapered bolt U advances these bearings outwardly when tightened up by the nut V; this may be termed the feed. The tool body W has a square at X and an adjustable gauge at Z, by which the cutters are set. The gauge being fixed, the tool inserted, and nut V screwed up, a spanner on X rotates the whole. Then V is tightened, the operation repeated, and so on till the tube is cut through.

Ferrule Extractor.—As tubes have to be withdrawn and replaced, and the ferrule is the most troublesome portion to remove, the extractor at Fig. 307 has been contrived to meet this difficulty. The washer *b* is first placed against the tube plate; then the set screw *d* released to allow the jaws *e f* to enter. When all are in position the screw *d* is advanced to press the jaws against the tube, and the nut *g* then tightened with a long spanner and the ferrule drawn out. All the four foregoing tools are supplied by Messrs. Selig, Sonnenthal & Co.

Digitized by Google

Electric Welding.—This important process, first introduced in 1885, has proved of great advantage in satisfactorily uniting pieces unattachable by ordinary means. Among these articles are boiler plates, which must be our apology for introducing the subject here. Wrought Iron, or in a less degree Mild Steel, were the only materials previously weldable, and even then the joint had but 70 per cent. of the strength of the solid material —a serious matter with crane chains, where every link is welded. Scale might form between the weld, the heating could not be seen openly, and might neither be even nor thorough; objections all absent in electric welding.

Electric energy consists of two factors—electromotive force (or pressure) multiplied by the current (volts × ampères). If this energy pass through a *good* conductor, nothing is observable in the latter; if a *bad* conductor be presented, the current will not pass; but an *indifferent* conductor will allow some of the energy to pass, while the rest is converted into heat on account of the resistance, the amount of heat energy produced being equivalent to the electric energy destroyed. The metals we most desire to weld are in the class of semi-conductors, and there is no difficulty in raising their temperature to welding point by the electric arc; but the heating effect of a current is independent of the pressure or potential, *depending only on the value of the current*, and it follows that the energy from the dynamo must be *transformed*, so as to obtain a low *voltage* with a high *ampèrage*. Every one knows the galvanic battery and induction coil, where a current of low potential becomes one of high potential after passing the coil, though at a sacrifice of current value, the energy remaining the same. Transformers serve the same purpose, being similarly designed, and it depends which side of the transformer we are on as to what ampèrage we obtain.

There are two processes employed in electric welding, the 'Thomson' and the 'Benardos,' named after Professor Elihu Thomson and M. Von Benardos respectively. The first consists in using the pieces to be united as the poles, and the second in using one of the pieces as the negative pole, while the positive pole is supplied by a rod of carbon, held in the hand in the manner of a soldering bit. The electric energy is obtainable in

Digitized by Google

either case by one of two methods—(1) from an 'alternating' dynamo, the 'current' being increased by passing through a transformer; (2) from storage or *secondary* batteries, which take their energy from continuous dynamos. The welding apparatus is not thereby altered. A general diagram in Fig. 308 shows the direct method combined with the Thomson process, where A is the dynamo, B the transformer, and C the welding apparatus. Two wires are clamped in position at D, and end pressure put on by the screws, the current switched on at E and regulated at F. The ends of the wires are previously brightened, and a flux of powdered borax interposed. After welding, the bar or wire is removed and hammered to size.

Energy remaining the same, the following examples will show the variation in ratio of potential and current for various purposes :—

1. For arc lighting : 2500 volts at 10 ampères.
2. For incandescent lighting : 100 volts at 250 ampères.
3. For welding : ½ volt at 50,000 ampères.
4. For welding : ¼ volt at 100,000 ampères.*

No. 3 would weld steel bars 1½ inches in diameter in less than two minutes, while No. 4 would do the same in one minute, absorbing 35 H.P., but only for a short time. The great advantage of electric welding lies in the local character of the heating, which prevents the spoiling of a finished piece of work.

We will now turn to the Benardos process, shown in Fig. 309. It is there worked by accumulators—the method most preferred. The batteries being charged from a shunt-wound dynamo, they are connected to a switchboard A, so arranged as to throw them out in sets of five. From this board the current passes through resistance coils for further regulation, and then through the welding tool B, the pieces to be welded, and back to the accumulators. Fifty cells are usually employed, and, if two boiler plates of about $\frac{7}{16}$ inch thick are to be united, the tool carries a very

* NOTE.—Only strictly correct in the Thomson process, where energy absorbed is due to true resistance. The Benardos process uses the *arc*, and energy is required to produce light, viz., to volatilise the carbon and render it incandescent : amounting roughly to 30 volts in addition.

Digitized by Google

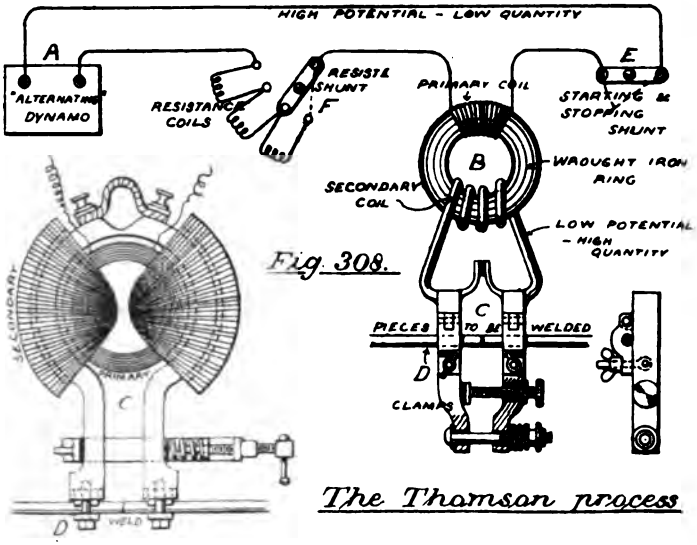

Fig. 308.

The Thomson process

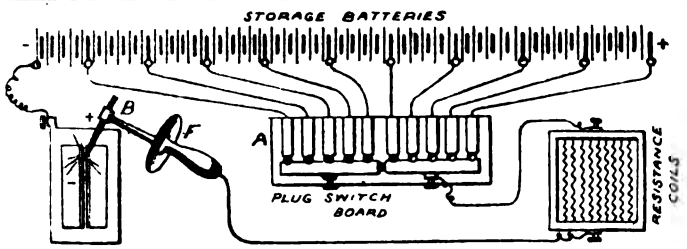

The Bernardos process

Fig. 309

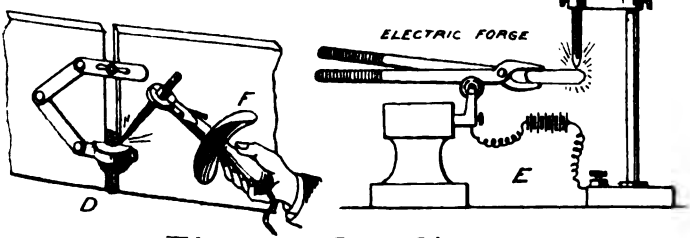

Electric Welding.

Digitized by Google

hard carbon about 2 inches in diameter, which is held in a copper sheath, guard F serving to arrest sparks, and protect the hand, while the handle is formed of non-conducting material, and the workman views the operation through a dark blue glass held in the left hand. Various applications are shown in Fig. 309. At C a lap-joint is being welded; and at D plates are welded while on end, a carbon cup holding the fluid metal being gradually raised as the weld progresses. An interesting application is seen at E, which may be termed an electric forge, where the circuit is completed by resting the tongs (having non-conducting handles) upon the roller, and touching the carbon with the piece of work. The intense heat of the arc forms alloys scarcely known previously, while, with nearly similar metals, the joint is always as strong as the weakest one. (*See Appendices I. and II.*)

Having described the various tools and apparatus used by the Boiler-maker and Plater, we will proceed to examine the kind of work to be performed by these men, and the structures which they are to build. We will consider Boiler Work first.

Cornish and Lancashire Boilers. — These are only dissimilar in the number of their internal flues. The Cornish boiler has but one, while the Lancashire boiler is provided with two, so we have considered a drawing of the latter only to be necessary. This is given at Fig. 310, where B is a longitudinal section: A and C end views. A is an internal view of the front, and B of the back plate. The front plate is flat, being fastened to the first shell plate by an angle ring *a*; but the back-plate is flanged at *b*. The shell plates are numbered from the front thus: 1st, 2nd, 3rd, &c., and as their dimensions would be about $3\frac{1}{2}$ feet by $25\frac{1}{2}$ feet, giving about 89 square feet area, they may each be made in one piece, as will be seen on referring to the table of maximum sizes (p. 282), where a $\frac{1}{2}$-inch plate may be 40 feet long, 8 feet wide, or 105 square feet area. We are enabled, therefore, to keep the joint near the top of the boiler, out of the water space, and easily reached after the boiler is set in brickwork. The front and back-plates are stayed from the shell by 'gusset' stays *d d*, which are oblique plates attached at each end by a pair of angles; and are further supported by the longitudinal stays *m m*. The fire-bars being laid in the flues at *j j* on supports, the heated gases pass

Digitized by Google

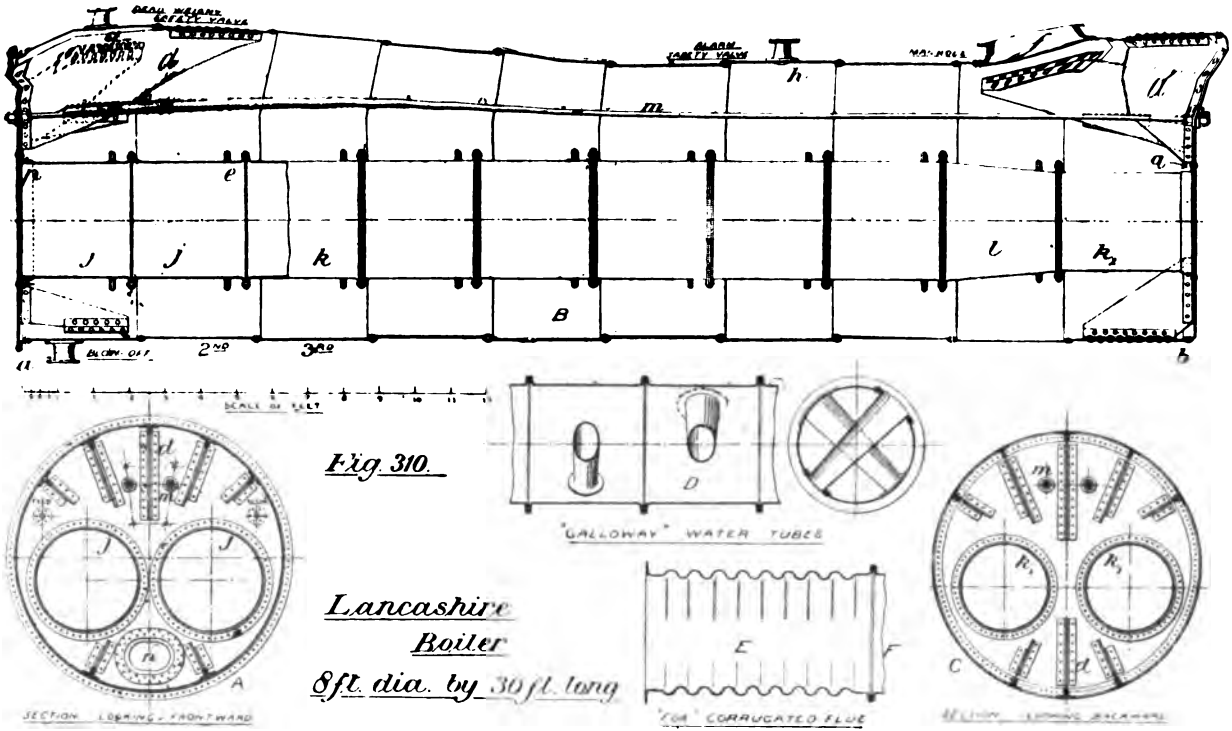

Fig. 310.

Digitized by Google

through to the end k_1, thence by brickwork flues, along the bottom of the boiler to the front, again to the back end by the brick side flues, and away to the chimney. The internal flues are therefore at a greater heat than the rest of the boiler; this, producing expansion, necessitates the introduction of elastic portions. The flues, moreover, are in danger from collapse, for a cylinder, although strong when pressed from within, is unstable when pressed from without; so strengthening rings are applied at various distances along the circumference. But as joints have to be formed, on account of the great length of the flues, it is customary to make provision for elasticity lengthwise, and rigidity of cross section also, at these places, the most usual method being by the introduction of the Adamson flanged seam at *e*. This joint has the advantage over other methods, of shielding the rivet heads from flame, and a slightly projecting annular strip is placed between the flanges for caulking purposes. The space between the tubes being small, the seams are made to 'break joint' longitudinally, so as to be easily got at when necessary. Conical 'Galloway' water tubes are sometimes inserted, as at D, for intercepting the heat more satisfactorily, the smaller end being passed in at the larger hole. The flues are joined to the end plates by angle rings, and their diameters decrease at k_1, the connection being formed by the conical portion *l*. The manhole edge at *f* is strengthened by a riveted ring, always added when a large hole is removed; and the mudhole *n* is similarly treated, a portion of plate being left all round, on which to place the internal door. Holes are cut for various fittings, as at *a*, *g*, and *h*. The circular seams are single riveted, but double riveting is used for the longitudinal joints, because any boiler receives but half the stress longitudinally that it does in a circumferential direction (*see p.* 398).

Fox's corrugated flues, shown in section at E, are extensively used for the furnaces of many boilers, taking the place of the two pieces *j j*; while F is equivalent to the portion *k*. The corrugations give not only strength and elasticity, but a larger heating surface.

The proportion of length to breadth in the boiler shown is the largest allowed; more often the length is about two-thirds of that given. (*See Appendix II.*)

Digitized by Google

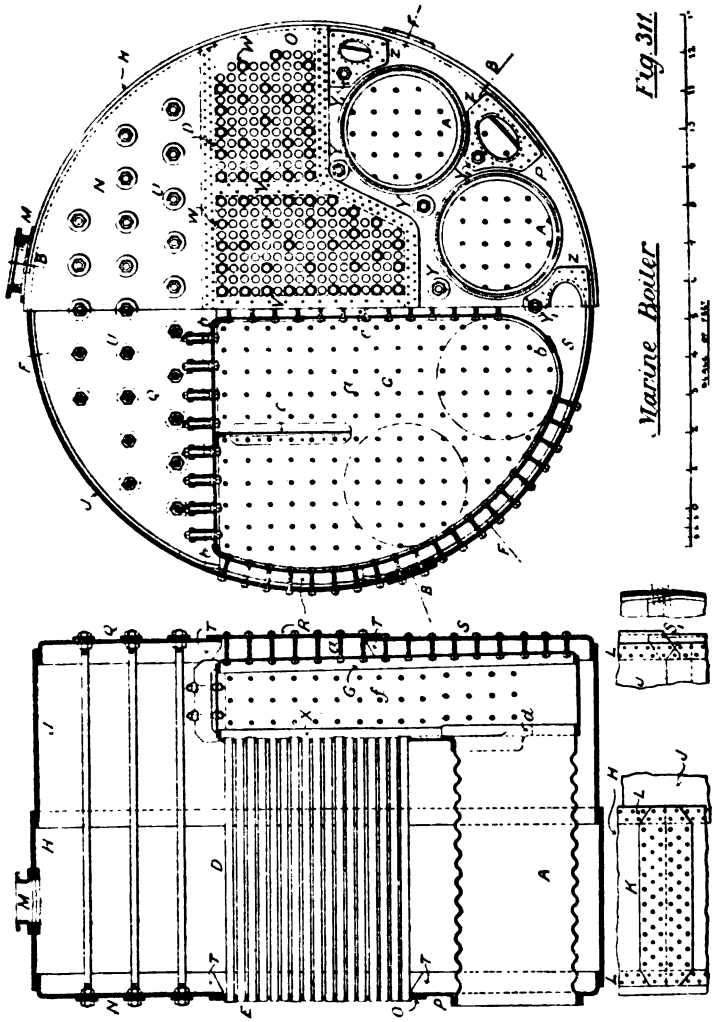

Fig. 311.

Marine Boiler

The Marine Boiler, as at present constructed, is shown by the two views in Fig. 311. The number of furnaces depends on the size of the boiler ; in this, a large example, there are four,

Digitized by Google

A A. The combustion chambers are also variously divided, there being from one to four per boiler; two are shown at G G, each having a plate C, to split and assist the draught. The heated gases, rising from the fire at A, pass through the combustion chamber G and tubes D, to the uptake, which is placed at E to cover the tubes. The boiler is cylindrical, but with large flat ends which require a good deal of stiffening, for flat portions in all boilers are weak. There are two belts of shell plates $1\frac{1}{4}$ inch thick, the first H and the second J, each being, on account of its large circumference, divided into three, and connected by double butt-straps, with treble riveting, as in plan at K. The division is uniform and is seen on the front elevation; where F F F represent the joints of the first, and B B B those of the second plate. The circumferential seams are double riveted, as at L L, and the manhole is placed at M, with strengthening ring. Sometimes a separate dome is connected to the top of the second plate, but just as often the steam valve is applied direct to the boiler; in any case the dome is simply a horizontal cylinder with dished ends. The front and back-plates are divided into three, N, O, and P showing the parts of the front-plate, while Q, R, S are those of the back-plate. N, P, Q and S are each $\frac{7}{16}$ inch thick, but R is only $\frac{3}{4}$ inch, and O is $\frac{13}{16}$ inch. They are all flanged and riveted as shown, O being cut out a suitable shape to take the nests of tubes, while R is rectangular. Where three plates overlap, the middle thickness is drawn out as shown at S_1, which is a plan of the joints T T. Longitudinal stays, for the steam space, are supplied by bolts U U, having large washers to distribute the pressure. The plate O is necessarily stiffened by double thickness at the seams, but there are also stiffening plates V V riveted on the inside, and stay tubes W W, shown by their nuts, support both plate O and combustion chamber tube-plate X. The other tubes, ferruled at the firebox end, and expanded at the uptake end, act also as stays. The plate P is stayed by bolts at Y Y_1, and the manholes are stiffened by riveted plates at Z. The three bolts marked Y_1 pass right through to the back-plate S, which is further strengthened, together with R, by screwed stays at *a*, which are bolts screwed their whole length and fitting into holes tapped in the plates. The combustion chamber back-plate $\frac{1}{2}$ inch thick, shown at G, is a simple flanged

Digitized by Google

plate; but the tube-plate X, $\frac{13}{16}$ inch thick, is throated to fit the furnace flue. The top and side plates, $\frac{1}{2}$ inch thick, are in three pieces, with joints at *b b b*, and wherever three thicknesses superpose, the mid plate is feathered, as at *b*. Screwed stays $1\frac{1}{4}$ inch diameter, 7 inches apart, are fixed between the chambers at *e* and at the sides, while the roof is supported by girder stays which each consist of two plates resting by their ends on the roof seam. Between these plates are passed collar bolts, which, after being screwed into the roof and fastened by nuts, are tightened against special washers on the girder. The furnace flues are of the Fox pattern, flanged to the throat plate as shown.

The Locomotive Boiler (Fig. 312) was the earliest form of multitubular boiler, and has served as pattern for many other steam generators. The firebox A is cubical and of $\frac{1}{2}''$ copper-plate, thickened at the tubes to $\frac{13}{16}''$. The back plate D is flanged, and dished round the firebox hole to the form shown, the tube plate C being also flanged. The top and sides are in one piece E, and all these plates, being flat and weak, are supported from the outer shell by screwed stays riveted over. The latter are $\frac{7}{8}''$ diam. and 4″ pitch, and must be of copper, to avoid corrosion by galvanic action, which frequently occurs next the firebox plate. The shell top and sides are in one plate H, cut out as shown at H_1; the throat plate F is flanged to join the barrel and the firebox shell; and the back plate G is also flanged. The foundation ring *a* serves as a distance or closing piece when fastening the shell to the box, and a similar piece is required at Z, called the firehole ring. Mudhole bosses *b b* are welded on the solid plate, and tapped for tapered screw plugs. A hole is cut in the top of the shell at V for a double safety valve, and the plate stiffened by a wrought-iron valve seating. From angles on the shell roof at W are hung the sling stays X X, supporting the girder stays Y, the latter being solid forgings, and the stay bolts taking the form of tap bolts. T is a stiffening angle for the shell back, and P P are expansion brackets which rest on the engine frame. The firebox tube plate, besides the ordinary screwed stays, has four palm stays at S S, which are seen in detail at S_1. Two plates, K and J, form the boiler barrel, and each makes a complete circle, the joints being shown in plan, well out of the water space. The dome L

Digitized by Google

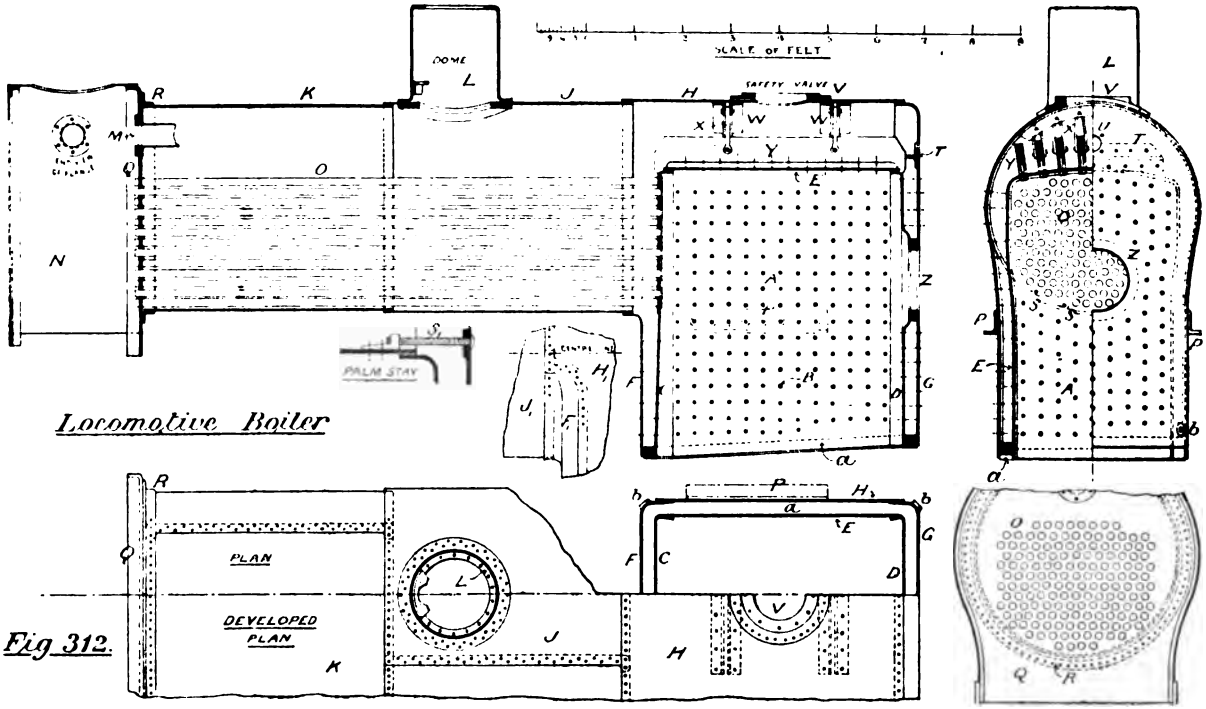

Locomotive Boiler

Fig 312.

Digitized by Google

is welded from one piece of plate and flanged over as shown, a stiffening ring being placed round the hole in the boiler, and an angle riveted within the dome to support the regulator pipe. The tube plate Q is attached to the boiler shell by angle R, and the smoke-box plate wrapped round as shown; but as the latter is not considered part of the boiler, we shall not discuss it further. A hole is cut in the tube plate at M to receive the copper steam-pipe, which is expanded to fit, and the tube holes are spaced as at the firebox end, excepting that they are all lifted higher by a small amount to clear the barrel plate. The circumferential seams are all single riveted, and the longitudinal seams double riveted. It will be noticed, in the end views, that the firebox is contracted, because it must fit between the engine frames, but after rising clear of these it may be enlarged.

The Vertical Boiler appears under several shapes. The chief difficulty has been to keep the heated gases in the firebox sufficiently long to allow of their yielding a reasonable amount of their heat to the water. Baffle plates, bent flues, cross water-tubes, have all been used, but the most effective construction seems to be that which imitates as closely as possible a short locomotive boiler. It should be so built that a man can get inside for repair or cleaning. The drawing at Fig. 313 shows Wailes & Fraser's patent boiler, a modification of Cochrane's, having the advantages required. A is a dome-shaped firebox, and B a connection to C, the combustion chamber. The shell is a vertical cylinder, made of three tiers of plates, and having a dished roof E stayed by four gussets F F. A manhole G communicates with the combustion chamber for the purpose of getting at the tubes, and the firehole is at H. The tubes J are expanded into the tube plates, and the smoke-box K is affixed afterwards. This form of boiler is found very efficient, but rather too rigid to withstand the deteriorating effect of expansion and contraction.

The Tubulous or Water-tube Boiler differs totally in design from any of the preceding. Fig. 314 shows a sectional elevation of the boiler, with its brickwork setting. A number of comparatively small lap-welded tubes at A are inclined over the fire, and connected at their ends by zigzag chambers at F and H,

Digitized by Google

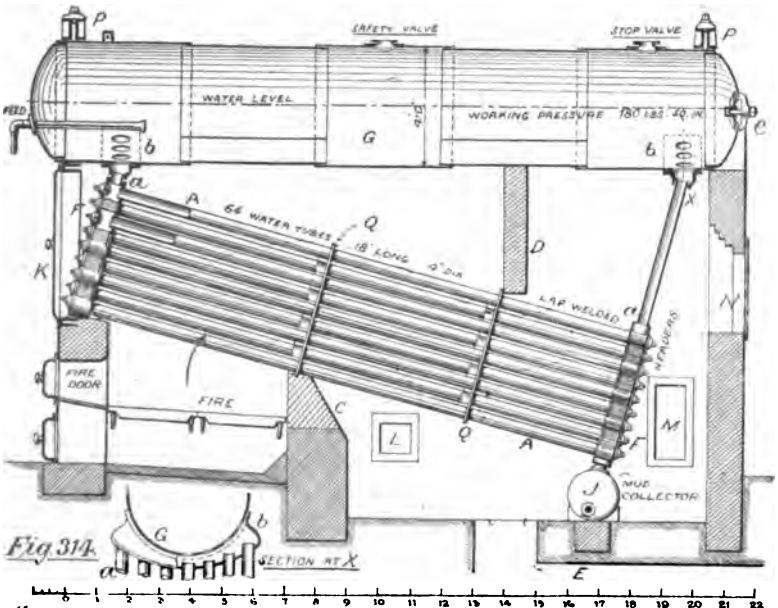

Fig.314.

Babcock & Wilcox's Water-tube Boiler

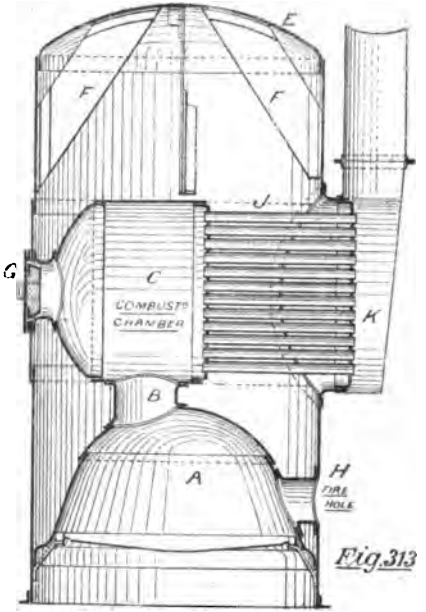

Fig.313

Wailes & Fraser's Vertical Boiler.

Digitized by Google

termed headers, which fit closely together. Every header is connected, by a tube *a*, with a collecting chamber *b* at each end of the receiver G; and all the tubes are expanded into their respective sockets, the necessary holes at *d* being closed by covers of 'mudhole' pattern. The water rises to the centre of the receiver, which therefore serves both as dome and part of the boiler. There is a cleaning hole at *e*. J is a cylindrical mud collector, while K, L, M, and N are soot doors; and the draught is compelled to follow the tubes, by reason of the division walls C and D, the flame plates Q Q, and the position of flue E. The receiver is held in place by the girders P P, bolted to the brickwork. The headers are usually of cast iron, though wrought-iron ones have been recently constructed, and plates Q Q, with firebrick distance pieces, serve to stay and support the tubes intermediately. The chambers *b b* are flanged and welded from wrought-iron plate, the tubes are of wrought iron or steel, and the receiver of steel plate. The flue may be at N instead of E.

These boilers have been much favoured recently by electric-lighting engineers, on account of rapid steam-raising properties, and immunity from accidents due to the small diameter of their tubes, with relatively great strength; but they require considerable cleaning and repairing. (*See Appendix II.*)

Geometry required by the Boiler Maker.—This is not of a difficult kind, but involves one or two intersections of solids, and development of the contact line upon either of the solids when their surfaces are laid flat. He must know the relation of circumference to diameter of circle, thus—

$$\text{Circumference} = \text{diameter} \times \pi$$

$$\text{and } \pi = 3{\cdot}1416 \text{ or } \frac{22}{7}$$

and the diameter of a boiler should be measured (for development) to the centre of thickness of the plate.

The intersection of cylinder with cylinder is given at Fig. 315, and the method of developing the plane surface: A and B representing a dome and boiler respectively. Taking the dome in plan, divide the circle into, say, twelve parts, and number as shown. Calculate half-dome circumference, and lay out as at C D, dividing into six parts by vertical lines. Project lines up

Digitized by Google

from plan to meet boiler circumference, and carry these along horizontally to cross the vertical lines at C D; the serpentine curve, being then traced through the numbers obtained, will represent the developed intersecting line. This may be repeated on the second half of the plate, and allowances made for flanging and welding. The boiler hole is developed by stepping-off the three distances, h, h_1, and H, with dividers, and measuring them from the vertical centre line in plan to give a, b, and c respectively, the remaining four segments being symmetrical. The length of plate is found by calculation.

Intersections of oblique cylinder with plane, or cone with cylinder, are rarely required; but cone with plane is sometimes necessary, as in funnels for American locomotives, or conical flues such as that shown at L, Fig. 310. The latter has been chosen as an example, and the form of plate developed at K, Fig. 315, J being the finished flue. The drawing J having been made, the outer lines are produced to meet at f, and the dotted circles struck, with $g\,f$ and $j\,f$ as radii. Upon these are measured the circumferences at d and e respectively, and allowance made for welding and flanging.

If the set-squares at hand be not long enough, the marker-off should be able to set out a right angle by the measurements of three sides of a triangle, it being easily remembered that the proportions 3, 4, 5, for base, perpendicular, and hypotenuse in turn, will serve his purpose, as can be proved by the 47th proposition of Euclid's first book, thus:

$$3^2 + 4^2 = 5^2 \quad \text{or} \quad 9 + 16 = 25$$

The length of arc, chord being known, is sometimes required and may be obtained as follows:—

Let c = the half chord.
r = radius of arc.
α = half the angle subtended by the arc.

$$\text{Then } \frac{c}{r} = \sin \alpha.$$

The angle α being found from a table of sines,

$$\underline{\text{Length of Arc}} = 2 \times \frac{\alpha}{360} \times 2\pi r = \underline{\cdot 0349 \alpha r}.$$

Digitized by Google

Fig. 315.

Geometry of the Dome Plate, Conical Flue plate, etc

Digitized by Google

Setting-out a Marine Boiler.—We are now in a position to detail the method of setting out the plates and putting together of any form of boiler previously described. Taking first the *Marine Boiler:* the Draughtsman must make a list of the plates required, taken from the drawings, for ordering purposes, giving each a marginal allowance, which will vary from $\frac{1}{4}$ in. to $\frac{1}{2}$ in. all round according to thickness of plate. This is necessary, for the shears at the Rolling Mill leave a rough edge and distress the plate. Referring to Fig. 311, the plates N, P, Q, and S would be ordered as 'sketch plates'; coming in roughly sheared to the shape: G and X might also be cut down at the mill; but the remaining plates would be ordered to the nearest rectangle. Care must be exercised to remember flange or lap allowances. The Fox tube is rolled by special machinery, so must also be 'ordered out.' When received, it must be carefully gauged at every ring, and if found to be more than a $\frac{1}{4}$ in. oval, must be rejected.

Supposing all the plates have been received, we will refer to the sketches in Figs. 316 and 317, taking the Front plates first.

I. *Front Stay Plate.*—This is received roughly sheared, as at 1. It is painted with whitening and marked off to drawing, as shown by dotted lines, keeping *a* near the edge to avoid much planing. Then the curve *b* is cut out by band saw to give an edge for the flanging gauge 2. Flange to gauge, by the progressive method, Fig. 290, the ends being set as at 3, by the horizontal ram. Being now considerably strained, the plate is placed in a furnace, and uniformly heated to a dull red heat; on removal it is laid on a flat table, and straightened by wooden hammers, then allowed to cool slowly. The edge 1*a* is next planed on the machine in Fig. 285, and a bevel given by setting as at 4, the angle being 1 in 8; often this is given to outer edges only. The long edge is planed with a stroke the full length, and the flange 5 with short strokes, the position of the stops Q, Fig. 285, being altered for the purpose. The flanged edge is milled as at 6, with a conical cutter, to obtain caulking inclination, a suitable table being provided to give a curvilinear feed.

The rivet holes are now drilled to the extent of one in every six, *measured along the pitch line*, for use in holding the plates together while drilling in position. In this case the holes along

Digitized by Google

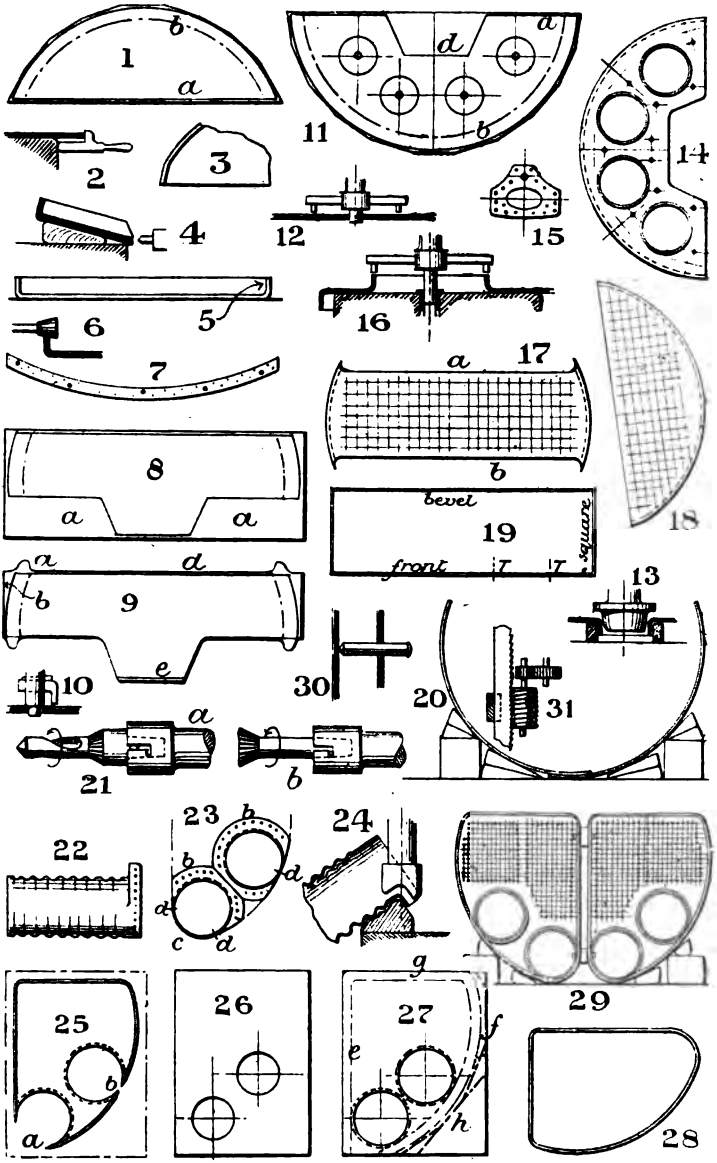

Setting-out a Marine Boiler. Fig. 316.

Digitized by Google

1*a* are to be marked from the tube plate; but those along the flange are obtained by laying upon the latter a *very thin* steel strip 7 prepared with marked holes, and of the exact length of the flange. After marking through, the flange holes may be drilled in a Horizontal Drill, and the plate holes in a Radial Drill. The holes for the stay bolts are marked off to dimension, as shown at U, Fig. 311, and drilled with clearance for the bolt.

II. *Front Tube Plate.*—The Plate is first marked as at 8, and part 8*a* cut out by Band Saw. The pieces 9*a* are next drawn out to a tapering wedge as at S_1, Fig. 311, after which the parts 9*b* may be removed by Band Saw. Flange 9*b* to gauge; anneal and straighten. Plane edges 9*d* and 9*e* to a bevel, trimming the corners by chipping, and mill the flanged edge as before. Set out all the plate rivets as at W, V, and V, Fig. 311, and the tube holes. Prepare a steel strip the exact length of the flange, and pitch the rivets upon it; then mark through to the flange one rivet in every six, leaving the corner rivets. (N.B.—It should be remembered that the corner rivets, where three plates overlap, are always better drilled absolutely 'in position.') Now drill all the plate rivets under a Radial Drill, and the tube holes at the same time, making first a small guide hole for the pin drill 10. The stay tube holes are made to tapping size, and the other tube holes to gauge. The flange holes are drilled in a Horizontal Drill, and the stiffening plates (V, Fig. 311) marked from the tube plate and drilled separately.

III. *Bottom Front Plate.*—Whiten the plate as before; draw centre line, line 11*a*, and strike curve 11*b*. Set out the centres of the furnace holes, and strike a circle on each, smaller than the flue by the flanging allowance. Drill a small hole for drill steadiment at the furnace centres, then lay the plate on the drill in Fig. 291, and take out the large hole by the trepanning tool 12. Heat and flange, as at 13, each of the furnace holes, and after cooling lay on the marking table to test the original lines, which have drawn a little; so the curve 11*b* must be re-struck, and cut by band saw. Flange to gauge, including the setting of the flange ends; anneal and straighten. Mark out line 11*d* and cut out with band saw; plane also the edge 11*a*. If possible, give the bevel at *d* when cutting, but if that is not convenient, finish

Digitized by Google

by milling or chipping. Mark the flange rivets, one in six, with a special steel strip, and the rivets along the seam *a d*, one in six, from the tube plate. Set out the centres for stays Y Y_1, Fig. 311, and mudholes Z Z, as shown at 14. Next prepare the stiffening plates 15 by marking out, sawing, cutting the oval hole by the special method shown in Fig. 291, and drilling the rivet holes. Place the stiffening plates in position, and mark through all their holes; then drill all holes by a Radial Machine, and cut the mudholes by the appliance in Fig. 291. The edges of the furnace flanges are tooled in the same machine by fixing the plate horizontally on the table and revolving the tool Q Q, as at 16.

IV. *Top Back Plate* is prepared in the same manner as I.

V. *Back Middle Plate.*—This must be lined out as at 17, with *a* and *b* parallel, and the curves struck. The rest may be understood from II. After planing *a* and *b*, and setting out the stay holes, the latter are left to be drilled till all are bolted together.

VI. *Bottom Back Plate* (18) is treated in the same manner as I., but the stay holes are all drilled in position, as in last example.

VII. *Front Ring Plates.*—There are three of these, all equal in length. They are lined, as at 19, with long set squares, then planed, the long edges to a bevel, and the short edges square; next taken to the Rolls, Figs. 286–7, and put through in the manner previously described. But many Marine firms prefer to work with Vertical Rolls, believing that besides supporting the weight, the curve is obtained more squarely with the long edge. In finishing the short edge, a greater pressure is given to secure accuracy of curvature, and partially avoid the necessity of bending with hammer. Now mark off the rivet holes to suit those already drilled in the flanges of the Front and Back plates. To this end the steel strips are again used, and, being very thin, do not differ appreciably in their outside and inside circumferences. The positions of joints T T must be found with relation to the butt joints F F (Fig. 311), and the centres of T T marked upon the front long edge of the ring plates. Then the steel strips are applied, and the holes marked to correspond with the flanges. Of course these strips must be all carefully numbered, to avoid

Digitized by Google

mistaking the one for the other. The rivet holes, one in six, for the back long edge must be set out so as to bring the joints F and B (Fig. 311) into exact relation with each other. B B are therefore marked upon the Front Plate, and two methods occur by which the intermediate holes may be traced: one involving the use of the thin strips, and the other being the placing of one plate upon the other, on blocks as at 20. The latter method seems preferable, because *all* the holes may be marked on the back edge of Front Plate, one in six drilled, and then traced through to the Back Plate, VIII. The manhole is next marked off, with its rivet holes, but is not cut out till in position. The butt strap is prepared by planing; heating and pressing to correct curves between dies; then marking off all holes, but drilling only three on each edge. It is next applied to the plate, these holes marked through and drilled.

VIII. *Back Ring Plates.*—These are also in three, and of equal length. They are marked as in the last example, and if care be taken, the horizontal joints of the plates II. and V. will be in line with each other. This is a necessity, so it is advisable to keep the vertical centre line of the boiler well in view, on all these plates I. to VIII., during the whole of the marking off.

We may now bolt together the whole of the shell plates through such rivet holes as have been drilled, and place the boiler upon the cradle A A, Figs. 293-4, Plate XIII. The drill spindle is adjusted as there described, and all the holes in the ring plates drilled right through. There are two principal forms of rivet holes required, as shown at 37 and 38, the former being for machine and the latter for hand-riveting. In 37 the arridge is just taken off, while 38 requires a deep countersink, but both may be given by the tools 21 (*a* and *b*). 21*a* is applied from the outside, and withdrawn when the hole is finished. 21*b* is then passed through from the inside of the boiler, and fastened in a special slot as shown. Its teeth cut left-handed, so the machine need not be reversed, but the backward feed is given by hand, and the depth gauged by a mark on the drill. All the shell rivets are like 37, excepting those in the back flange, and even they may be machine-riveted, as will be shown. The manhole is taken out by drilling holes round its circumference close together, then

Digitized by Google

finished by chipping. The bolts being clamped, their holes are also countersunk, being first rimered to ensure exact correspondence. The rivet holes both at front and back of boiler are next drilled by placing the latter on a cradle, which allows the flat plates to stand vertical, and face four drill standards supporting horizontal drills on suitable saddles. The boiler joints being truly level, the rivet holes may be easily drilled, as well as the stay holes in the back, the latter being made to tapping size.

IX. *The Furnace Tubes* (22 and 23) are usually obtained rolled, flanged, and cut to correct shape, an allowance being left at front end for turning. They may be flanged, however, under the machine in Fig. 290, as shown at 24, using special dies. Mark off all the flange holes, as at 23, and drill *all* those at *b*, one in every six at *c*, but none at the corners *d*.

X. *Combustion Chamber Throat Plate.*—This is flanged to the shape shown at 25. A rectangular plate being procured, the centres of the furnaces are found as at 26, a hole trepanned, and the flanging of the throat done at one heat, as at R, Fig. 290. The rest of the plate is lined as at 27 and the corners cut, the sides *e*, *f*, *g*, and *h* being flanged progressively until the whole fits a cast-iron block or template. This is of course an operation involving great care. Now the portions 25*a* and 25*b* are sawn out, finishing the plate with the exception of the taper ends, which are drawn out by heating and hammering on the cast-iron block. After milling the flange edges, the rivet holes 23*b*, connecting with the Fox tube, are marked from the latter, and drilled separately; and the flange holes carefully spaced out by reference to the top corners and the furnace centres, but only one in every six drilled now, and none through the taper portion.

XI. *Combustion Chamber Back Plate* (28).—This must be lined out and flanged progressively to fit a cast-iron block, and the flange edge then milled. The stay holes are drilled in position.

XII. *The Cover Plates* for the Combustion Chamber are now edge-planed, rolled, and bent hot with hammer, until they exactly fit the flanged plates, as shown in Fig. 311. There are three of these plates, one for the roof, and one for each side; and the holes already drilled in the flanged plates must be traced through

Digitized by Google

upon them. The inner laps at the joints *b b b* must of course be tapered, but no holes are yet drilled there, or through any of the tapered pieces.

Fix all plates of both chambers, including Fox tubes, with temporary bolts; and, laying each upon its back, drill with Horizontal Drill *all* the rivet holes, as spaced on the cover plates. Mark out and drill to tapping size the stay holes in the mid cover plate of *one* chamber only, and drill also the holes for the girder-stay bolts. Set up both chambers in position as at 29 by bolting through the rivet holes, and blocking below. Obtain level position with great exactness, then draw horizontal tube centres by squaring from the roof, and the vertical lines from the middle plates. They are afterwards drilled to correspond with II. The mid stay holes are marked from one chamber to the other by a punch 30, of the same diameter as the tapping size of the holes, and afterwards drilled by Horizontal Drill.

The Girder or Roof Stays are now cut out by band saw, being clamped together, and are next fitted to the roof, as shown in Fig. 311.

The Band Saw is a very useful tool, but requires some attention to keep it keen. The tool at 31 is a roughened steel helix, rotated by gearing to sharpen the saw teeth as the band is advanced.

Riveting the Boiler.—The Front and Back Plates may now be put together in a Fixed Riveter as at 32, and the ring plates attached by the same machine up to the condition L, Plate XVI. But the Back Plate must either be put in by hand or semi-hand process, or by the machine at P, Plate XVI. The combustion chamber (after riveting up) is first inserted, and laid loosely within the shell. Then, if hand-riveting be used, the rivet will appear like that at 38, the flat finish being obtained by very quick consecutive blows from riveting hammers used by two workmen, while a third 'holds up' a cupping tool within the boiler. The hammering is continued on both sides after the rivet is cold, as a sort of caulking. A pneumatic hammer is employed in some works, as at 33, where a lever vibrates from a crank plate driven by a belt, while the hammer end is provided with a pneumatic dashpot or cushion, giving a finish like 36. The

Digitized by Google

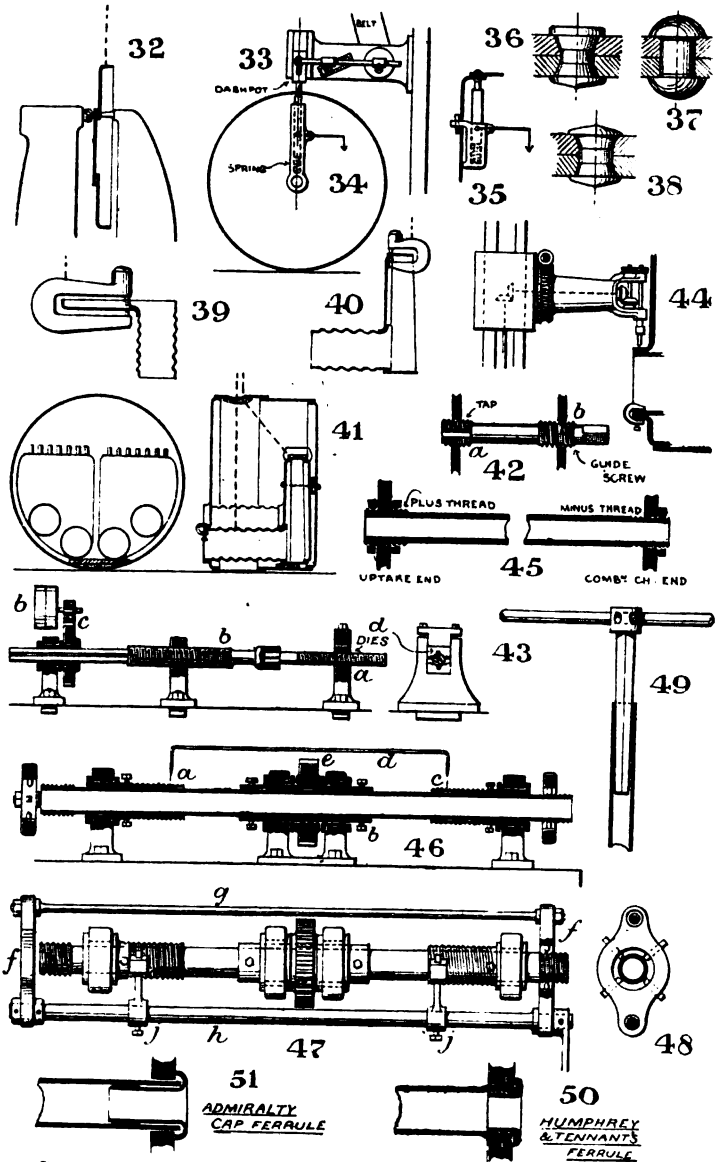

Setting-out a Marine Boiler Fig 317

Digitized by Google

holding up may be obtained as at 34 or 35, by pressing on the levers there shown.

But the boiler may be finally closed by machine, using the methods at P or M, Plate XVI. The former is adapted to internally flanged boilers, the tube plate being cut in three pieces at the stiffening plates. After the flange has been riveted, the various tube plate rivets may be closed by the usual Lever Riveter with long arms, dropped in through the furnace holes. The best result is obtained by a boiler designed as at M, Plate XVI., and this should be employed whenever the ship designers permit it.

The *Combustion Chambers* are put together as at 39 and 40, but the back plates are riveted by hand, with rivets like 38, unless the flanges be made as at M, Plate XVI. The chambers and furnaces are next put within the boiler shell, and the latter closed. They are slung as at 41, carefully blocked and bolted in position, then clamped at the front. Placing the boiler on a cradle, before horizontal drills, and on the machine in Plate XIII., drill the stay holes through into the Combustion Chamber to ensure exact alignment for the screw threads. All stay holes, including those between the chambers, are now tapped, as at 42, by a tap whose threads *a* and *b* are continuous.

The *Screwed Stays* are prepared on the machine at 43. Stay *a* is coupled to spindle *b*, which revolves by gearing *c*; screw *b* has the same pitch as die nut *d*, and prevents the formation of unequally pitched threads on the stay by 'drawing' or uneven pressure. The stays, having a square on their ends, are now placed in the boiler with a wrench, a nick being first turned at each end to represent their exact lengths; so that having been advanced to correct position, a sharp twist will break off the surplus material. Nuts are now added, and the stay ends trimmed up.

The boiler being still upon its cradle, the rivet holes at the furnace mouth are set out and drilled by the machine at 44. The drill bracket may be revolved on a horizontal axis by worm gearing, and this, coupled with the rotation of the boiler, will enable us to drill all round. The riveting-up is shown at K, Plate XVI.

Digitized by Google

The Stay Tubes must next be screwed. They are either formed with a *plus* thread at one end and a *minus* thread at the other, as at 45, or both ends may have a plus thread. The first involves less labour, while the second is stronger. The tapping machine is shown at 46–7–8. First the tube is cut to length, and placed within the bushes *a b c*. After *a* and *c* have been adjusted till the trammel *d* (whose length represents an exact number of threads) fits their thread grooves, the set screws are tightened, and the spur wheel *e*, being rotated, will also turn the tube and the bushes. At 48, the end view of *f*, are seen two screwing and two chasing tools, the one pair being withdrawn while the others are in operation, and the two pieces *f f* are united by a back rod *g* and a shaft *h*. *h* is again provided with two arms *j j*, which hold copper dies resting on the bushes *a* and *c*. It follows, therefore, that when the machine is in operation, the tube turns, and the screwing tools advance to cut the screw on the tube ends of the same pitch and with a perfectly continuous thread, as obtained by means of the adjusting trammel *d*.

The Tube plates are next tapped. A short tap of the usual form is used for the front plate, but after that is done, a long tap like 42 is inserted to screw the back plate, *a* being the tap and *b* the guide screw. Of course, as before, the two threads must be continuous. The stay tubes are inserted with a square drift and wrench 49, while the plain tubes are expanded at the uptake end and ferruled at the opposite end; then cut off by the tool at Fig. 306. The ferrules at 50 and 51 are found most effective for marine work.

The Manhole seating is now flanged. A ring is cut out of a solid plate by trepanning, and then bent over blocks by hammers to the shape M, Fig. 311. Of course this occupies both time and labour, and probably a method of machine flanging might be suggested. The stiffening plate being also provided, both pieces have their holes marked from the boiler, are then drilled, and riveted to the shell. The longitudinal stays are prepared and screwed, their washers turned, and all bolted up in place.

The seams and rivet heads are finally caulked, and the boiler tested—(1) by hydraulic pressure, to about twice, and (2) by steam pressure, to about $1\frac{1}{2}$ times the working pressure.

Digitized by Google

Setting-out other Boilers.—The general methods given in detail for a Marine Boiler are equally applicable to other boilers, some little variation being necessary to suit the particular form.

The *Locomotive Boiler* was given in Fig. 312. The back shell plate G, the throat plate F, the firebox tube plate C and back plate D, and the smokebox tube plate Q, are each flanged at one heat, between full-sized dies, under a Piedbœuf press (Fig. 289); then the edges are finished by planing and milling. The fire-holes in D and G are struck out and trepanned, also the holes T and M. The barrel plates are marked off and planed to dimensions; the dome hole L closely punched round its circumference, but the piece only removed *after* bending; and the corners of the plates heated and drawn out taper where necessary. These plates are next rolled to complete circles, with overlap as shown in plan at J. The firebox-shell cover plate must have its developed outline marked out upon the provided plate, including the set-off at H_1 and the hole at V. H_1 must then be cut out by band saw, or by a combination of punching and shearing, finishing under a vertical mill in either case. The remaining edges are planed, and all finished with a bevel for caulking. The hole at V is punched in the same manner as L, with the piece left as a support during rolling. The cover plate may now be bent carefully to fit the flanged plates. Heat and taper all mid feathers or plate ends that have to lie between two other thicknesses. Prepare the firehole ring Z and foundation ring *a* by forging from wrought-iron bar and welding; forge also the girder stays Y and the safety valve seating V, both being steam-hammer work. The last is bent to the shell curve, then planed underneath and surfaced on top. Weld the mudhole bosses *b b* on the plates, either by roughing the two surfaces to be joined, or by shouldering down the boss and riveting through on the inside. Bend the angles W W and ring R in the machine at Fig. 288, the ring being welded with a glut piece. Forge the sling stays and pins at X, and cut off the angles P and T with circular saw. The dome plate is rolled into a cylinder and welded, then the flanges at top and bottom are formed by heating and bending over special blocks with wooden hammers, and the stiffening piece is cut from solid plate.

Digitized by Google

All the plates are now prepared, and must next be marked off for drilling. First the tube holes are carefully lined on the two tube plates, and cut out by pin-drills in a radial machine. Then the *outer* plates may have their seam rivets spaced out, and one in every six drilled, always omitting the corner holes, or those where three plates overlap. The various parts may now be bolted together, and all the rivet holes drilled and countersunk. Thus K and Q being connected, the tube-plate rivet holes may be done in a radial drill; adding plate J, the circular seams may be drilled, as described at page 308, including also the holes in the dome-hole stiffening piece, and those for the smokebox plate. The dome flange is marked from the boiler and drilled separately. Bolting H to J, the firebox shell may be drilled round its circumference in like manner, but those on the flat sides would be done under a radial or multiple drill, the latter being preferable. The barrel is now disconnected from the firebox shell, and the firebox bolted to the latter; then the whole shell placed on the lower table of the Multiple Drill in Plate XIV., and the stay holes drilled right through both plates to secure accurate alignment. All remaining holes are now made, such as those for the angles T, W, and P; for the seatings V and M; for the palm stays at S_1; and for the guide stays at E.

The operation of riveting is clearly shown at Plate XV. The barrel and shell are closed by fixed riveter at A and O, and the firebox partly by O and partly by portable riveter. Then the smokebox plate and the firebox are each fastened to the boiler shell by portable machines, as shown at G, L, and H. Finally, the dome may be riveted as at P, so there is no occasion for hand work on any part of the boiler. Note that the angles W, T, and P must be riveted before the firebox is put in.

The tubes are fixed by expanding at the smokebox, and beading and ferruling at the firebox end, using the tools in Figs. 304 and 305; and the smokebox ends of the tubes are then cut off by the tool in Fig. 306. The screwing of the stays will be understood from the marine example, but in this case their ends are riveted over by hand after fixing. The mudholes are tapped to suit the plugs, the guide stays screwed into place, and the steam pipe M expanded into the plate. The boiler is lastly caulked throughout and tested.

Digitized by Google

The *Lancashire Boiler* (Fig. 310) may be next considered shortly. The back and front plates are turned, trepanned, and drilled throughout, with the exception of the rings *a*, *b*, *p*, and *q*, these being marked afterwards from the angles. The shell plates are prepared as before and drilled in position with axis vertical, two by two. The angle ring *a* is also drilled for the shell, and the holes at *b* for the flange; then all are riveted together in batches of three, with a fixed machine, and the batches connected by hand, or by the method at 34, Fig. 317. Next the flue plates are rolled, welded, and flanged as at 24, Fig. 316; turned on machine, Fig. 291; drilled in position by machine, Fig. 292; and riveted together, with caulking strip between, by a portable riveter. The plates *j* and k_1 are to have the angle rings *p* and *q* attached, but the plates themselves are first *bolted* to the other tubes, and the whole tested with a long wooden lath to see if it will make up to the same length as the boiler shell; then the end tubes turned down accordingly. The general straightness of the tube should be tried during riveting, and adjusted by varying the thickness of the caulking strip. Now the rings of holes—*a*, *b*, *p*, *q*—may be marked on the end plates. First the holes at *p*, *q*, and *a* are marked and drilled. Then the shell is laid horizontally, the flues blocked up in place, the back and front plates put on, and bolts put in the rings *a*, *p*, and *q*; when the holes in the shell at *b* may be traced through to the flange. Removing the back plate to drill the flange holes, the gusset stays are prepared with their angles riveted on, and are placed within the boiler. The back plate is once more bolted on, and the whole boiler lifted on to a trolley, which can be run under a radial drill, the latter being preferably hinged on a wall or shop pillar so as to be at a sufficient height while presenting no obstruction beneath. The holes *g*, *h*, and *f* are cut out by drilling, and those in the shell, for the gusset stays, lined out by squaring from the end plates, then drilled. Entering the boiler, the workman places the stays in position, and marks off the remaining rivet-holes in the end plates. Removing the back plate again, the gussets are taken away to drill, then all are replaced for riveting.

The gussets, the flange *b*, and the rings *p* and *q*, must be riveted by hand, but the ring *a* may be done by machine.

Digitized by Google

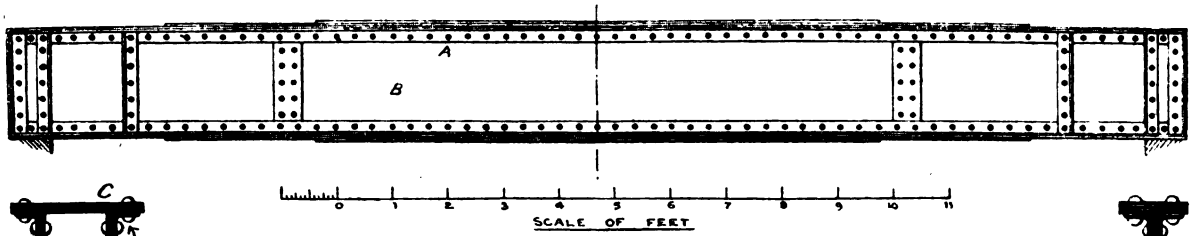

Built-up Girder. Fig. 318.

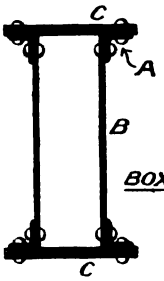

BOX SECTION

PLATE SECTION

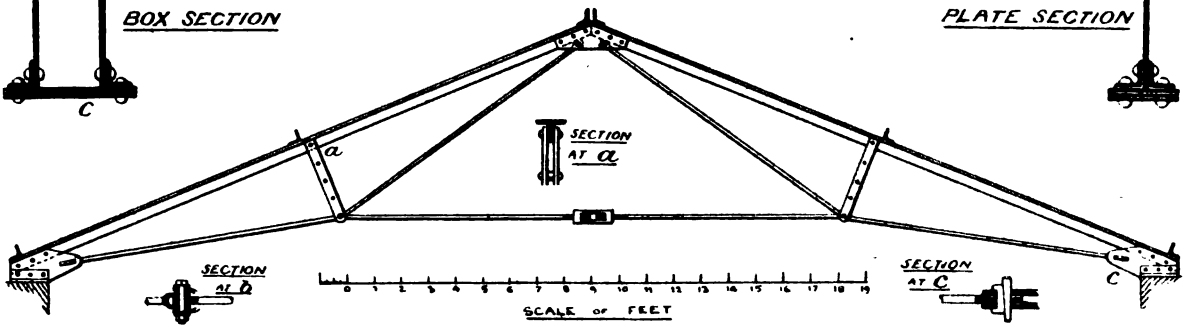

Iron Roof-Principal Fig. 319.

Digitized by Google

Prepare the longitudinal stays and manhole seating; put in place, with fittings; and test the boiler as before.

The *Vertical* and *Tubulous* Boilers present no further difficulty. Taking the first, the shell is built-up separate from the firebox and chamber. Machine riveting can be used for most of this work. But when putting together, the foundation ring is the only other part that can be done by machine; all the rest is hand work. The tubes are expanded into the tube plates as before.

The *Tubulous Boiler* has its tubes cut to length and expanded into the headers; the chambers *a b* flanged and welded; while the making of G will be understood from previous descriptions.

As further examples of Plate Work, we illustrate a *Girder* at Fig. 318 and a *Roof Principal* at Fig. 319; but these are simple in comparison with boilers, as far as their practical construction is concerned. The Box Girder has its plates and angles sheared to dimension, the holes then marked off, punched, and rimered in position. The angles A and web plates B are first riveted, and next connected to the booms C C; so it will be clear that no hand-riveting whatever is necessary. The Roof Principal needs no explanation. The first application of portable riveting to bridge erection was made by Mr. Tweddell in 1873, on the Primrose Street Bridge, London.

Ships are now built of steel plates and angles, whose dimensions are carefully got out by the draughtsman in the first place. Much more drilling is now done than formerly, though a considerable amount of punching prevails, and the plates are usually sheared. The keel and framing are first erected, and the plates then adjusted and marked from these. As regards the riveting up, nothing could show this better than the diagram at Fig. 301. Of course there are many plates too long to be reached by the machine, but this diagram shows what an extraordinary amount of work can be performed by these wonderful 'Portable Riveters.'

Digitized by Google

PART II.

Digitized by Google

SYNOPSIS OF LETTERING ADOPTED IN THIS PART.

CAPITALS.

A Area in square feet.

B_m Bending moment. [efficient of discharge

C Modulus of transverse elasticity in lbs. per sq. inch: Co-

D 'Larger diameter' in inches.

E Modulus of direct elasticity in lbs. per sq. inch.

F Total stress in tons per sq. in.: F° = Fahrenheit.

F^{lbs} Total stress in lbs

F_n Tractive force to overcome friction: in lbs.

G Weight of a cubic foot of water: Centre of gravity.

H Height or head in feet: Total heat.

H.P. Horse power per min. = 33000 foot pds.

I Moment of inertia $\left\{\Sigma\ (\text{area} \times r^2)\right\}$.

J Joule's equivalent.

K Modulus of volumetric elasticity in lbs. per sq. inch.

K_p Specific heat of a gas at constant pressure: in foot lbs.

L Length in feet. [K_v = ditto at constant volume.

L_h Latent heat. [C_p and C_v = same quantities in heat

M Poisson's ratio. [units.

N Number of revolutions per min.

O Coefficient of bending stress. [in lbs. per sq. foot.

P Total pressure in lbs.: Effort, or force applied: Pressure

P_{tons} Total pressure in tons.

Q Concrete of formula for struts $= \frac{\pi^2 E I}{l^2}$: Water discharge

R Radius in feet. [in cub. ft. per sec.

R″ Larger radius in inches.

R_t Reaction at supports. [heat.

S Range of stress variation in Wöhler formula: Sensible

T Number of teeth.

T_m Twisting moment.

T_n Greater tension in belt or rope.

T^o Final temperature in heat mixtures.

U Work put in.

V Velocity in feet per min.: Volume in cub. ft.

W Weight or load in tons: Resistance, or force removed.

X Number of bolts in flange coupling, cylinder cover, &c.

Y Concrete of formula for beam deflection $= \frac{w l^3}{48 E I}$.

Z Modulus of section (in bending).

Z_t Ditto (in twisting).

Digitized by Google

SMALL LETTERS.

a Area in sq. ins.

b Breadth in ins. [constant.

c Contraction coefficient for gun coils: cylinder clearance:

$\bar{c}$ Coefficient of velocity.

d Diameter in ins., or 'smaller diameter.'

e Base of Napieran or hyperbolic logarithms = 2·718.

f Stress per sq. in. in tons (generally): acceleration in ft. per sec.

f_t, f_c, f_s, f_b Stresses in tension, compression, shearing, and bearing, respectively: in tons sq. in.

f^{lbs} Stress per sq. in. in lbs.

f_l Lateral stress.

f_o Modulus of rupture (in bending).

f_h Hoop stress.

g Acceleration of gravity in ft. per sec. = 32·2 at London.

h Height in inches.

i Intermediate radius of thick cylinder.

j

k Pitch of bolts in terms of bolt diameter.

l Length in inches.

m Mass in lbs. $= \frac{w}{g}$.

n Number of revolutions per sec.

p Pressure in lbs. per sq. in.

p^{tons} Pressure in tons per sq. in.

p'' Pitch of screw or of riveted joint.

q

r Radius in ins., or 'smaller radius.' Ratio of expansion.

s Side of square in ins.: specific heat.

t Thickness of plate: time in secs.

$t°$ Temperature, or rise of temperature, in deg. F.

t_n Lesser tension in belt or rope.

u Work given out.

v Velocity in feet per sec.: volume in cub. ins.

w Weight or load in lbs.

w'' Width of one link in rivet calculations.

x Coefficient in Wöhler formula. [twisting).

y Distance of furthest fibre from neutral axis (in bending or

z

Digitized by Google

GREEK LETTERS.

Small Letters.

α (*alpha*). Coefficient of linear expansion in degrees Fahrenheit: various angles.

β (*beta*). Various angles.

γ (*gamma*). Ratio of $\frac{\text{specific heat at constant pressure}}{\text{specific heat at constant volume}}$.

δ (*delta*). Deflection per inch length: δ^{feet} = ditto per foot.

η (*eta*). Efficiency.

θ (*theta*). Angle of torsion.

κ (*kappa*). Coefficient of jet contraction.

μ (*mu*). Coefficient of friction or tangent of friction angle.

π (*pi*). 3·1416 or $\frac{22}{7}$: ratio of circumference to diameter.

ρ (*rho*). Radius of curvature in bending: coefficient of resistance.

σ (*sigma*). Various angles.

τ (*tau*). Absolute temperature in F°.

ϕ (*phi*). Angle of friction: entropy.

ω (*omega*). Angular velocity.

Capitals.

Δ Total deflection in inches.

Δ^{ft} Total deflection in feet.

Σ 'Sum of.'

SIGNS.

$\propto$ 'Varies as.'

$>$ Greater than.

$<$ Less than.

$\|$ Parallel to; with fibre.

$+$ Across fibre.

Digitized by Google

PART II.—THEORY AND EXAMPLES.

CHAPTER VIII.

THE STRENGTH OF MATERIALS, STRUCTURES, AND MACHINE PARTS.

OUR intention in this chapter is to treat of the cohesive strength of the materials used in Mechanical Engineering, of practical testing to obtain strength constants, and of the use of the latter in proportioning machine parts, so far as may be done.

Load is the total effect on the structure of the external forces, and may be 'dead' or 'live,' concentrated or distributed (*see pp.* 391 *and* 438).

Stress is the cohesive force within the material called into play to resist the load. (*See Appendix III.*)

Strain is the deformation produced by the stress.

Kinds of Stresses.—Only three *simple* stress-strain actions are possible: *tension* (pulling), *compression* (thrusting), and *shear* (cross-cutting). Bending is a mixed action, and local compression produces a *bearing* stress. Fig. 320 shows the distortions and fractures produced by these various stresses.

Elasticity is the property of regaining original shape and dimensions after distortion; very apparent in an *elastic* body, but scarcely perceptible in a *rigid* one. In 1676, Hooke propounded the law 'ut tensio sic vis' (as the tension, so the strain), meaning that stress and strain are proportional, if within the elastic limit of the material.

Limit of Elasticity.—A bar being subjected to an increasing stress (of any kind), will receive also a proportionately increasing strain (of the same kind) until the *elastic limit* is reached, after which the strains increase more rapidly than the stresses till rupture occurs. Showing this by a diagram, Fig. 321, O is an

Digitized by Google

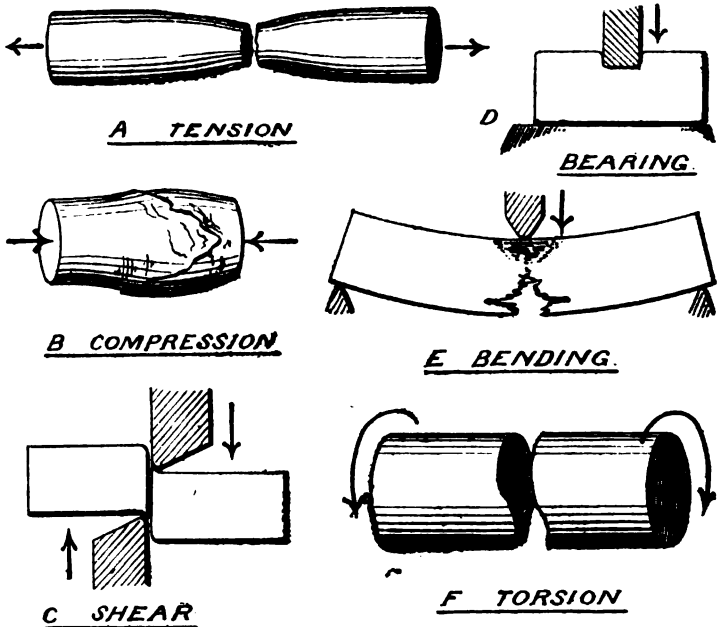

Fig. 320 Distortions & Fractures

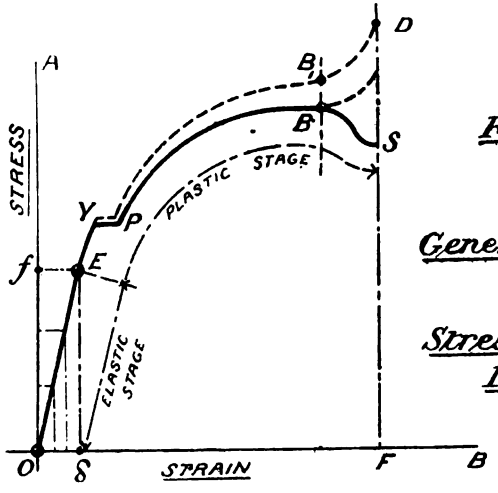

Fig. 321

General form of Stress-Strain Diagram

Digitized by Google

origin from which stresses are measured along O A, and strains along O B. E is the elastic limit and O E is a straight line, showing proportionality of the co-ordinates. Plasticity begins at E, and (assuming a case of tensile stress) increases in perfection up to B, the curve being interrupted at Y, the *yielding or breaking-down point* (or commercial elastic limit), while the lowering at B S indicates rapid contraction of sectional area at rupture (*see* A, *Fig.* 320). If the stress be compressive the material enlarges in diameter after B is reached, and thus becoming stronger, the curve rises thence instead of falling: neither is the yield point observed.

If W = load in tons at B, a = original area, and a_1 = contracted area:

$W \div a$ = stress per sq. in. estimated on original area.

and $W \div a_1$ = stress per sq. in. estimated on contracted area.

The first is used commercially, and is shown at B, while the latter, the strictly scientific result, is given at B_1; and the plastic curve is thus corrected. The curve from B to S is not considered reliable.

Compressive stresses do not materially distort the specimen up to B, so the curve requires no correction. The *primitive elastic limit* occurs at E, after which a *permanent set* is given to the bar. This limit may be altered artificially.

Modulus of Direct Elasticity, or Young's * modulus, (E) is a number giving the ratio of stress and strain within the elastic limit, and is practically the same for tension or compression.

$$E = \frac{\text{stress sq. in. in lbs.}}{\text{strain per inch length}} = \frac{f_t^{lbs}}{\delta_t} = \frac{f_c^{lbs}}{\delta_c}$$

Modulus of Transverse Elasticity, or Modulus of Rigidity (C), serves similarly for shear action thus:

$$C = \frac{\text{shear stress sq. in. in lbs.}}{\text{shear strain per inch length}} = \frac{f_s^{lbs}}{\delta_s}$$

δ_s will be understood by reference to Fig. 322, being the strain between two shear planes an inch apart.

Modulus of Volumetric Elasticity (K) compares stress and diminution in volume, thus:

$$K = \frac{\text{stress sq. in. in lbs.}}{\text{decrease in vol. per cub. inch}} = \frac{f_v^{lbs}}{\delta_v}$$

* Dr. Thos. Young, Foreign Sec. Royal Society, 1826.

Digitized by Google

TABLE OF ELASTIC MODULI (units being inches and lbs.).

Material.	E.	C.	K.
Cast Steel ...	30,000,000	12,000,000	26,000,000
Forged Steel ...	30,000,000	13,000,000	
Steel Plates ...	31,000,000	13,000,000	...
Mang. Bronze...	...	...	...
W.I. Bars ...	29,000,000	10,500,000	20,000,000
W.I. Plates ...	26,000,000	14,000,000	
Copper	12,000,000	...	24,000,000
Gun Metal ...	13,500,000	...	...
Cast Iron ...	17,000,000	6,300,000	14,000,000
Brass	13,500,000	...	15,000,000
Muntz Metal ...	14,000,000	5,250,000	...
Water	...	...	300,000

Mechanical treatment may raise these ratios: for tempered steel E = 36,000,000 and C = 14,000,000, while for rolled or drawn copper E = 15 or 17 millions respectively.

Poisson's Ratio (M) is a constant to determine the lateral effect of direct stress. If a bar, as in Fig. 323, be extended or compressed, it undergoes lateral contraction at A and expansion at B. Then, within the elastic limit:

$$\text{Direct strain} = \text{lateral strain} \times M$$

$$\delta_t \text{ or } \delta_c = \delta_l \times M$$

TABLE OF POISSON'S RATIO.

Material.	M.
Steel	3·25
Wrought Iron...	3·6
Cast Iron	3·7
Copper	2·6
Brass	3·0

Nature of Shear Stress.—If the bar in Fig. 324 be subjected to an elastic shear strain, any square *a b c d* becomes a

Digitized by Google

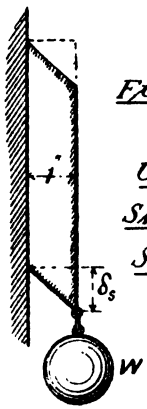

Fig. 322.

Unit Shear Strain.

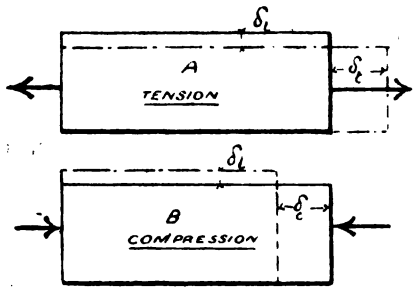

Lateral contraction & dilatation by Poisson's Ratio. Fig. 323.

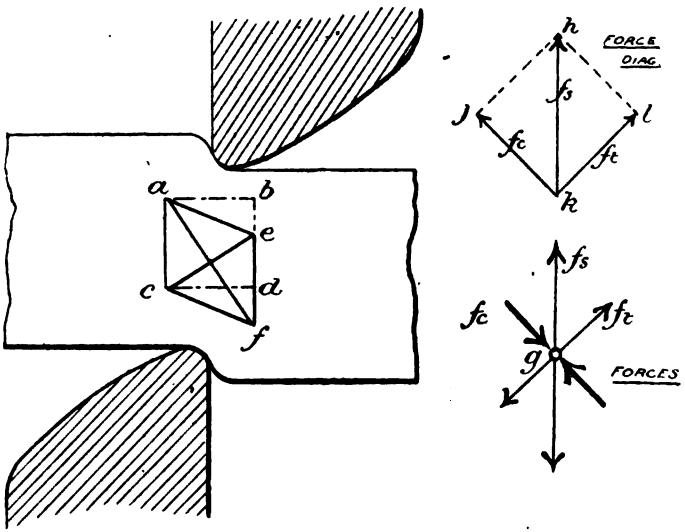

Nature of Shear Stress Fig. 324.

rhombus *a e c f*, the diagonal *c b* being shortened and *a d* lengthened, each by the same amount. Then because stress $\propto$ strain, the total stress F_t on *c b* = the total stress F_c on *a d*. These are components

Digitized by Google

of the total shear stress F_s on $a\ c$, and have directions at 45° to F_s. A force diagram being drawn,

$$F_c^2 + F_t^2 = F_s^2$$

and F_c or $F_t = F_s \div \sqrt{2}$ (*See Appendix I.*)

Nature of Tensile and Compressive Stresses.—On account of the cup or wedge fracture exhibited when a specimen is broken by tearing or crushing, and for other reasons, Prof. Carus-Wilson argues that rupture takes place by shear stresses at 45°, either wholly or partially. Certain it is that the three stresses are intimately connected, and assist each other in destroying the cohesion of the particles.

Work done by Uniform Forces.—The unit of work is a *foot-pound*, or *one pound exerted through a distance of one foot.* One pound acting through two feet, or two pounds through one foot, are each *two foot-pounds.* Hence:

Work = pressure × distance
= pounds × feet = foot-pounds.

These forming a product may be represented by an area, for length × breadth = area, and A, Fig. 325, is therefore the diagram of work with uniform force:

Work done = pounds × feet = O X × O Y = area A.

Work done by Variable Forces is shown by diagram at B, Fig. 325. As the body moves from O_1 to 5, the pressure varies as $O_1 X_1$, 2 *b*, &c. Now, work done between O_1 and 1 can neither be $O_1 X_1 \times 1$ ft. nor 1 *a* × 1 ft., but must be the average of these, or $O_1 f \times 1$. In like manner the other dotted rectangles show the work between the remaining intervals, and their addition,

Area $O_1 X_1 b Y_1$ = work done.

Work done in Deforming a Bar is found at 1, Fig. 326. Divide O B into ten parts, and erect perpendiculars *between* the divisions. Measure the vertical ordinates in tons, then

$$\frac{\text{Total of ordinates}}{10} = \text{mean load in tons,}$$

and mean load × extension″ = work in inch tons.

Digitized by Google

Resilience is the work done in deforming a bar up to the elastic limit. 2, Fig. 326, is the diagram, where B A is the maximum elastic load, and O B the corresponding strain.

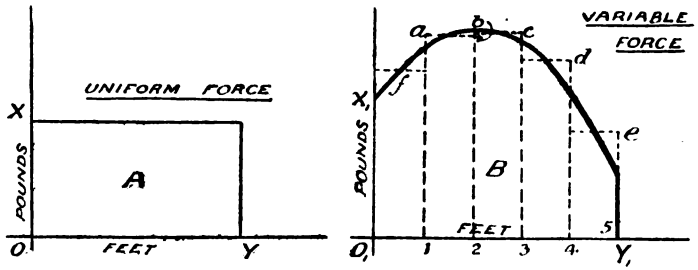

Diagram of Work, with uniform or variable forces. *Fig. 325*

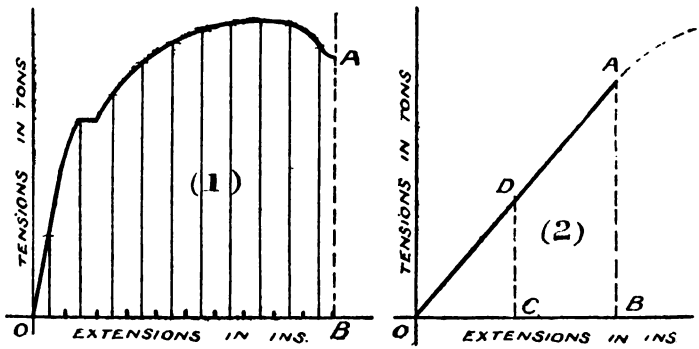

(Total Work) *(Resilience)*

Work done in deforming a bar.

Fig. 326.

Work done = area A O B = C D × O B,

or generally,

$$\text{Any work within elastic limit} = \frac{\text{final max. tot. stress}}{2} \times \text{tot. strain} = \frac{F}{2} \times \Delta \text{ (inch [tons)}$$

Digitized by Google

Stress caused by Impulsive Load.—When a body moves with a given velocity, its store of energy (or work capacity) $= \frac{wv^2}{2g}$ ft. lbs. (see p. 98). If this be absorbed by an elastic material, we have:

$$\text{work stored} = \text{work given out}$$

$$\therefore \quad \frac{wv^2}{2g} = \frac{F^{lbs}}{2} \times \Delta^{ft} \text{ (within elastic limit)}$$

$$= \text{total mean stress}^{lbs} \times \Delta^{ft} \text{ (for all cases)}$$

and $$\underline{\text{Total mean stress in lbs.}} = \underline{\frac{wv^2}{2g\Delta^{ft}}}$$

which is applicable to steam-hammers, pile-drivers, fly-presses, gun-targets, &c.

If the fall of a weight deflect a beam, or stretch a crane chain, then—

$$\left.\begin{matrix}\text{work stored in weight} \\ \text{in inch lbs.}\end{matrix}\right\} = \left\{\begin{matrix}\text{work done on material} \\ \text{in inch lbs.}\end{matrix}\right.$$

$$w(h+\Delta) = \frac{F^{lbs}}{2} \times \Delta$$

and F^{lbs} is the greatest total stress, or the steady load which would produce the same strain Δ.

Stress caused by Heating and Cooling.—Experiment shows that the expansion or contraction by heat or cold of a bar

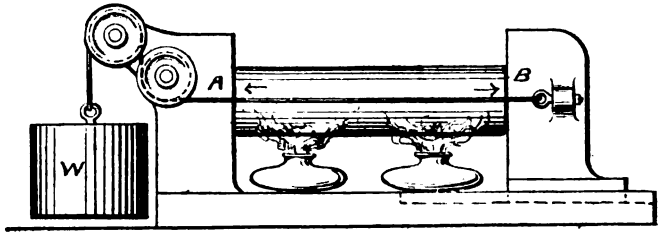

Force caused by heat. *Fig 327.*

of given material, is a regular quantity for each degree of temperature. When measured per inch length or breadth, and per degree Fahrenheit, it is given in the following table:—

Digitized by Google

COEFFICIENT OF LINEAR EXPANSION IN DEG. F (a).

Material.	$a_{(1)}$
Strong steel	·00000 63
„ „ tempered	·00000 73
Mild steel	·00000 57
Wrought iron	·00000 66
Cast iron	·00000 62
Brass	·0000 105
Copper	·00000 95
Bronze	·0000 111

If $t°$ = rise or fall of temperature, $a\,t°$ = expansion or contraction for every inch, and

Each inch is increased or decreased by $a\,t°$ ins.

But strain by mechanical means is $\delta = \frac{f^{lbs}}{E}$ (*See p.* 363.)

Then if $a\,t° = \frac{f^{lbs}}{E}$

$$f^{lbs} = E\,a\,t°$$

and total force of expansion on walls, as in Fig. 327 at A B, is

$$F^{lbs} = E\,a\,t\,a$$

Necessity of Testing to obtain Unit-strength Constants.—It has been hoped that the cohesive strength of the various materials might be obtained solely by chemical analysis, but continued experience seems to show more and more the necessity for direct mechanical tests to obtain the strength per square inch in tension, compression, and shear; hence the use of testing machines. Certainly it is wise also to refer to chemical composition in stating the quality of a material, in order to know how far it is safe to heat or otherwise treat the same.

Testing Machines.—One machine generally serves for tension, compression, and bending experiments, the pulling shackles being changed to suit. Possibly machines may ultimately be designed to test all combined stresses, and thus verify the theoretical formulæ on which we at present rely. In small machines

Digitized by Google

the pull is exerted by turning a screw directly or by gear, but in large machines hydraulic power is employed, while the load is always measured by a smaller weight attached to a lever or system of levers, in steelyard fashion.

Cement Testing Machine.—Michele's machine will illustrate the above details, the load being applied by worm gear at B to the specimen H, a cement briquette, and the pull measured by the weight and lever C, or Danish steelyard. The arm D varies

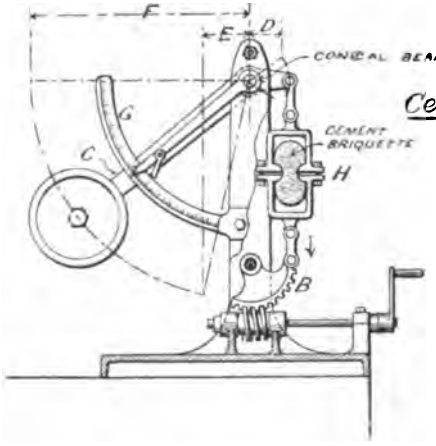

Cement-testing Machine

Fig. 328.

very little, but the arm E increases to the maximum F or some shorter distance, during the experiment; the stress therefore varies as this arm and the pointer is left at its furthest position after rupture, while the weight returns about half an inch. The scale is graduated to represent the full load upon H.

Horizontal and vertical testing machines are so named from the direction of the pull, and each has its particular advantage; the former is represented by

The Werder Machine, extensively adopted in Germany, and shown in Fig. 329. C is the specimen to be tested, and B an adjustable washer between shackle and crosshead A, to allow for length of C. Ram D moves to the right by water pressure from hand pumps, and the pull is given through the bolts E E, for tension at C, or compression at G. The load is measured by the

Digitized by Google

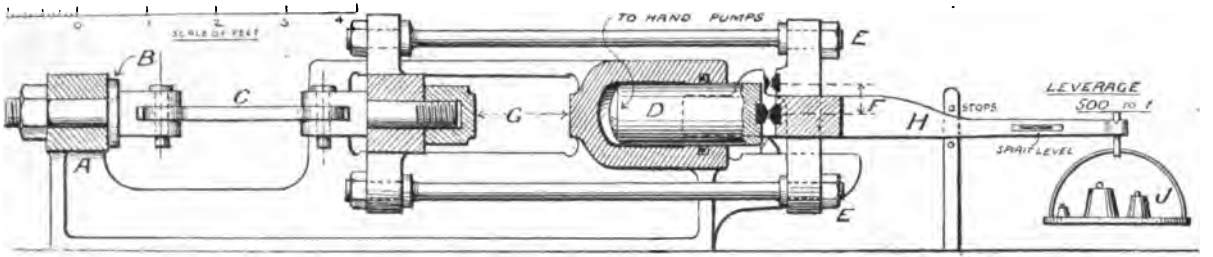

Fig 329 Werder Testing Machine.

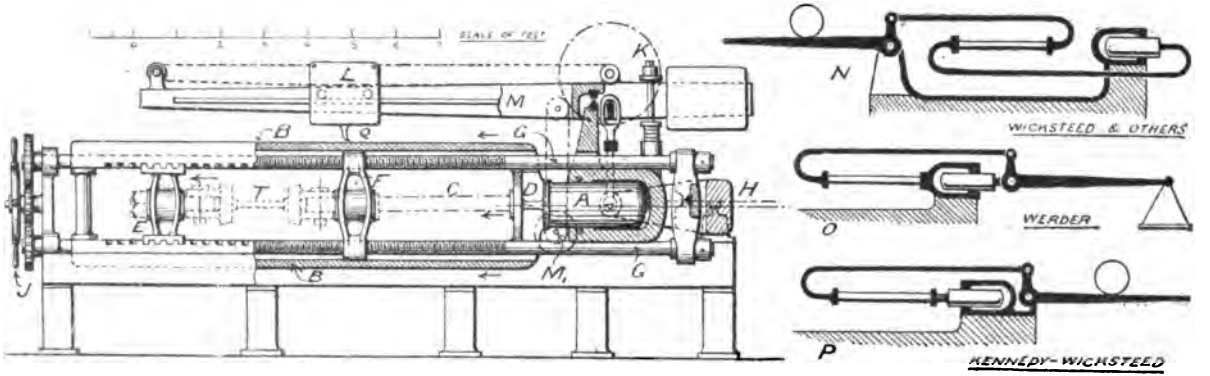

Fig 330. Prof. Kennedy's 50 Ton Testing Machine. (BY BUCKTON & Co)

Digitized by Google

weights J and lever H, the shorter arm of which is F, the pressure being received on knife edges $\frac{3}{16}''$ apart (or much smaller than shown), and a leverage of 500 to 1 thus obtained. A spirit level is used to ascertain the horizontality of the lever H.

Professor Kennedy's Machine.—Messrs. Buckton & Co. have made a machine to Professor Kennedy's requirements, em bodying the Werder principle with improvements. In Fig. 330, A is the hydraulic ram in a fixed cylinder, and B a sliding frame carrying an adjustable crosshead E. T shows a tension experiment and C a compression experiment, the load being resisted in either case by the crosshead F, and its effect transmitted through the rods G G to the system of levers. H corresponds to H in Fig 329, but a second lever M is here applied, with a jockey weight L to avoid the trouble of changing weights. L is traversed by hand gear at M_1 and carries a pointer at Q, while K is a spring stop, and J a hand gear for adjusting the position of F by turning the screws G G. In this machine all the operations are within control of one experimenter and the specimen well in view; in addition there is, during compression experiments, a shorter length of parts between cylinder and weighing levers than in any other machine (except the 'Emery'), as shown by the thick lines in the figures N, O, and P, thus giving less recoil on the knife edges at rupture.

The Wicksteed Machine, also by Messrs. Buckton, is shown at Fig. 331, as designed by Mr. Wicksteed to Professor Unwin's instructions. A is the steelyard weighing lever, and B the jockey weight, which at a leverage of 50 to 1 exerts 50 tons pull upon the specimen. Additional weights up to $1\frac{1}{4}$ tons at C exert another 50 tons by means of 40 to 1 leverage. The knife edges are shown in detail at D, Fig. 332, being 20 inches long from front to back; and the weight B is moved by screw *a*, either by hand at E or by power at F, through the shaft *b* and gearing *d*, the connection of the strap *e* being made immediately below the fulcrum. The lever is kept horizontally between stops H H by admitting pressure water to the straining cylinder J through pipe R, and the load is relieved towards the close of an experiment by running back the jockey weight. The pressure water is obtained in Professor Kennedy's machine from the Hydraulic Power Company, in a recently-built Wicksteed machine at the Durham

Digitized by Google

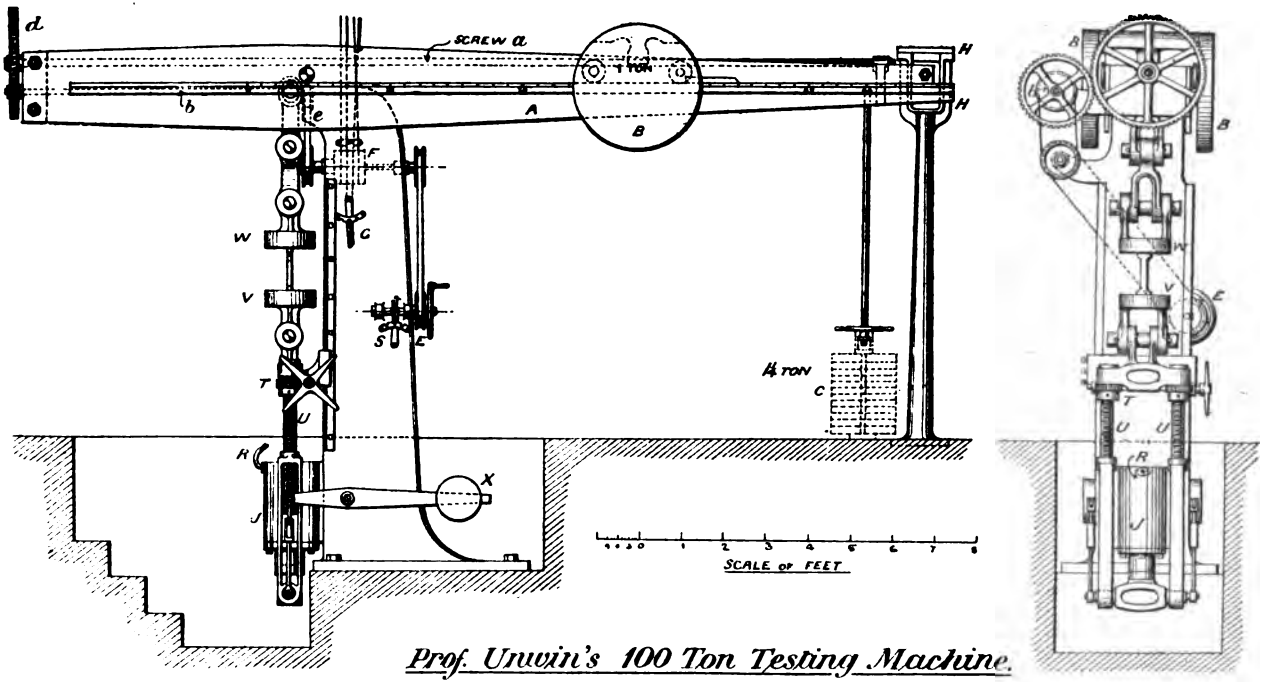

Prof. Unwin's 100 Ton Testing Machine.

(BY BUCKTON & Co.) *Fig. 331.*

Digitized by Google

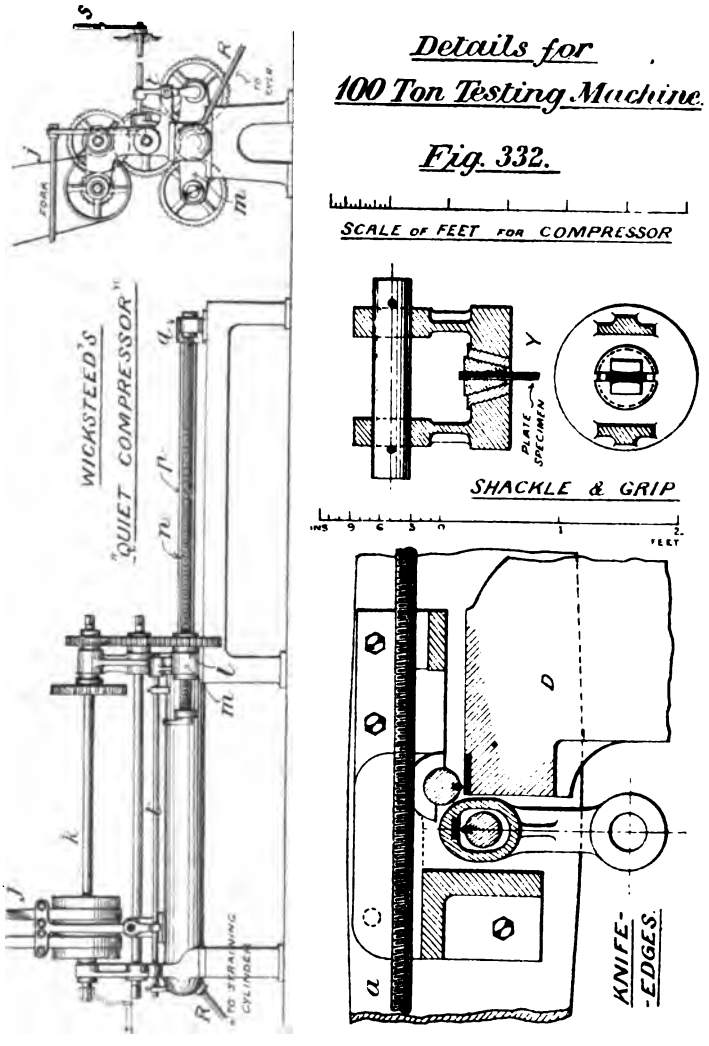

College by town's water acting through the Intensifier in Fig. 333, and in the usual Wicksteed machine by means of the 'Quiet Compressor' in Fig. 332. Crossed or open straps at *j* drive a

Digitized by Google

shaft *k*, connected by spur gear with nuts *l l*, which turn within the bosses *m m*, and thus advance the screws *n n*. The latter are connected to the ram *p* by crosshead *q*, and thus a very even pressure is given to the water, which finally passes to the straining cylinder J, Fig. 331, through pipe R. The pump may be worked by hand if necessary, or the strap fork moved by hand lever S if power be used, and a cut-off gear at *t* puts both straps on loose pulley when either end of the stroke is reached. The shackles W and V, Fig. 331, are adjusted to suit the specimen by turning the screws U U through the worm gear T; and X is to balance the

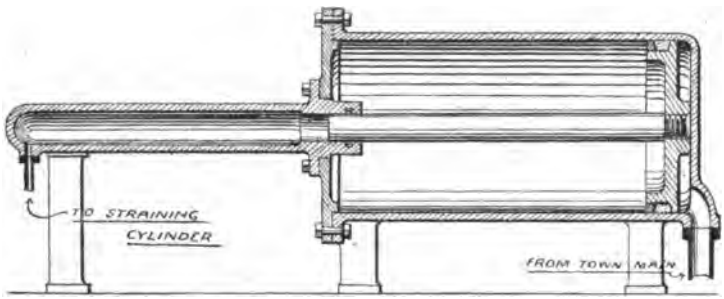

Intensifying Compressor. *Fig. 333.*

loose gear, from V downwards. Enlarged views of the shackles are given at Y, Fig. 332, to clearly show the gripping wedges, slightly convex on the inside and roughed like a file.

Mr. Wicksteed's alternative fulcra, as designed for Professor Hele-Shaw, are shown in Fig. 334. Fulcrum A is employed for heavy tests, and B for lighter tests, which are thus made with a greater degree of sensitiveness. The lever knife-edges are level, but the support C, which can be put in or out of position by worm-gear, is higher than support D, as seen at (2). This gives enough clearance for vibration either at (1) or (2), and the lever takes the position E F when changing the centres. (*See Appendix II.*)

The Emery Machine has obtained great favour as an instrument of precision. Professor Unwin says of a 75-ton machine: 'Every half-pound of load was precisely and instantly measured, whatever the stress the machine was exerting.' It is

Digitized by Google

only fair to say, however, that Professor Barr, in referring to a Wicksteed machine (May, 1888), said 1 lb. additional had been indicated, with a load of 43 tons. Referring to Fig. 335 : A is the straining cylinder, having water admitted ***beneath*** its piston for tensile, and ***above*** it for compressive tests. Adjustment for length of specimen is made by simultaneous revolutions of the nuts C C,

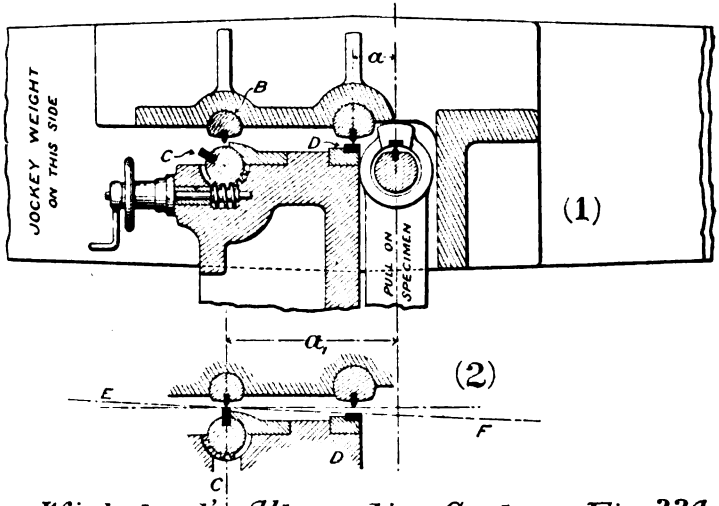

Wicksteed's Alternative Centres. *Fig. 334.*

through hand-gear B, to move the cylinder, and the water pipes have swivel joints to allow the motion. To measure the load, the hydraulic support at D is employed, which consists (see enlarged section) of a sealed sac of soft sheet brass J, ·005″ thick, containing alcohol and glycerine, and supported by a dwarf piston F, and cylinder E_1. The pressure compels the plates to fill concentric channels at J J, while further support and closure is given by the rings at H. The 'yokes' M and N take the hydraulic support between them; and the crossheads O and P in turn act on the yokes, the first for compression, and the second for tension. Thus the load, being applied on the straining cylinder, is felt at J, and transmitted to the liquid, through pipe R, to the second sac at Q,

Digitized by Google

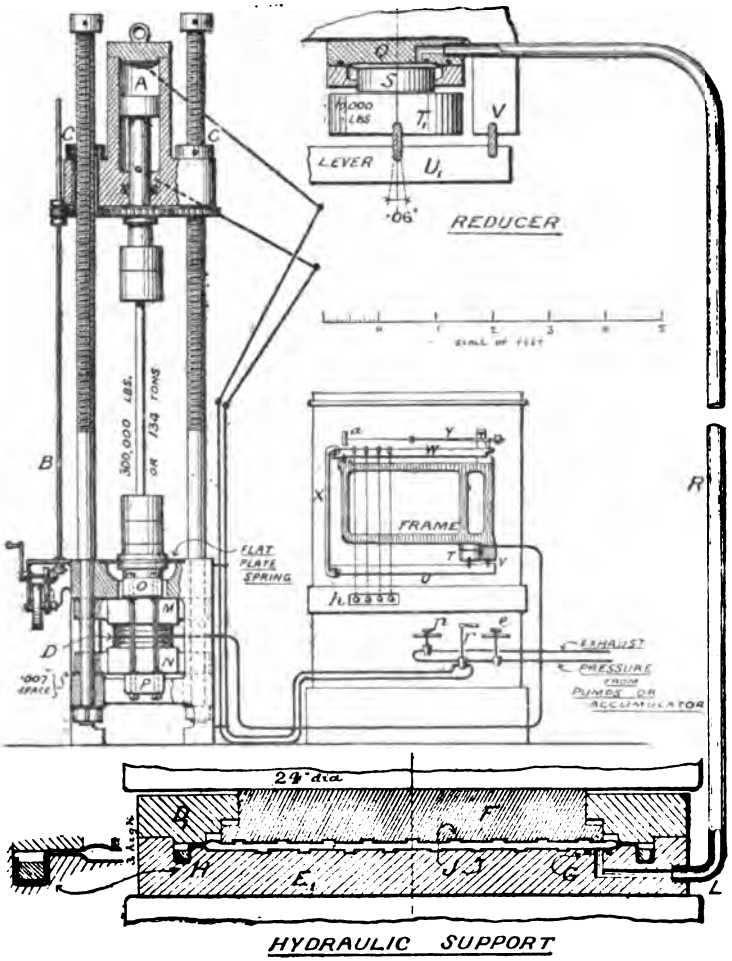

The Emery Testing Machine *Fig. 335.*

termed the 'reducer,' and from thence to the lever weighing apparatus. The movement of F is only ·001", but the reducer and support areas being as 1 : 30, the movement of piston S is

Digitized by Google

·001 × 30 = ·03″; or 300,000 lbs. on the specimen become 10,000 on the block T_1. Instead of knife edges, very thin springy plates are used, forced into grooves, as at V, and the pressure on T_1 is decreased by levers U and W, till the vibrating pointer Y is reached, the connection from W to Y being by a much thinner plate in tension. As the lever system gives a ratio of 20,000 to 1 between the motions of *a* and T, it follows that $\frac{1}{10}$ inch at *a* will give a movement on the support D of $\frac{1}{10} \times \frac{1}{80} \times \frac{1}{20,000} = \frac{1}{6,000,000}$ inch, and the total multiplying capacity of the weighing apparatus is 600,000. Very small weights (about $\frac{1}{10}$ oz. per ton of load) are therefore all that are necessary to keep the levers horizontal, and these are placed upon lever W by handles and rods at H. Where the pipe R enters the sacs J and Q, the plates are depressed and held in position by a ring, as at G.

The parts M, N, O, P are balanced by means of springs which can be very nicely adjusted, and not only are the various resistances reduced to a very small amount, being the bending of light springs through infinitesimal distances, but these are all allowed for in the calibration of the weighing apparatus. Two hand-wheels are placed at *p* and at *e*, the larger opening to pressure and exhaust respectively, while the smaller wheels adjust the openings within the larger plugs, so that the flow may be regulated between 1 foot per min. and ·002″ per hour; and *r* is a reversing valve for changing flow to top or bottom of cylinder. The Watertown arsenal machine, U.S.A., is an Emery machine of 357 tons capacity.

Professor Thurston's Torsional Testing Machine is designed for twisting stresses only, and was first made about 1874. Fig. 336 shows its construction. A is the specimen, held in shackles, the twist being applied by worm-gear B, turned by hand. The load is measured by a pendulum weight C, as in Michele's machine, and a diagram obtained autographically, in a manner to be described later.

Shackles for Test Specimens should be carefully designed to give a perfectly axial strain, or the amount of ultimate load will be affected. The Wicksteed tension shackles have already been described at Fig. 332. Of other tension shackles in Fig. 337, A is Professor Unwin's, having spherical seats screwed to the ends of the specimen, a very good plan; and B was used by Sir John Anderson, with split sockets *a* to connect the shackles

Digitized by Google

to the specimen *b*, held in place by a slightly conical ring *c*. Compression shackles are shown at Fig. 338. A_1 and B_1 are to take small specimens in a tension machine, and the arrangement at C_1

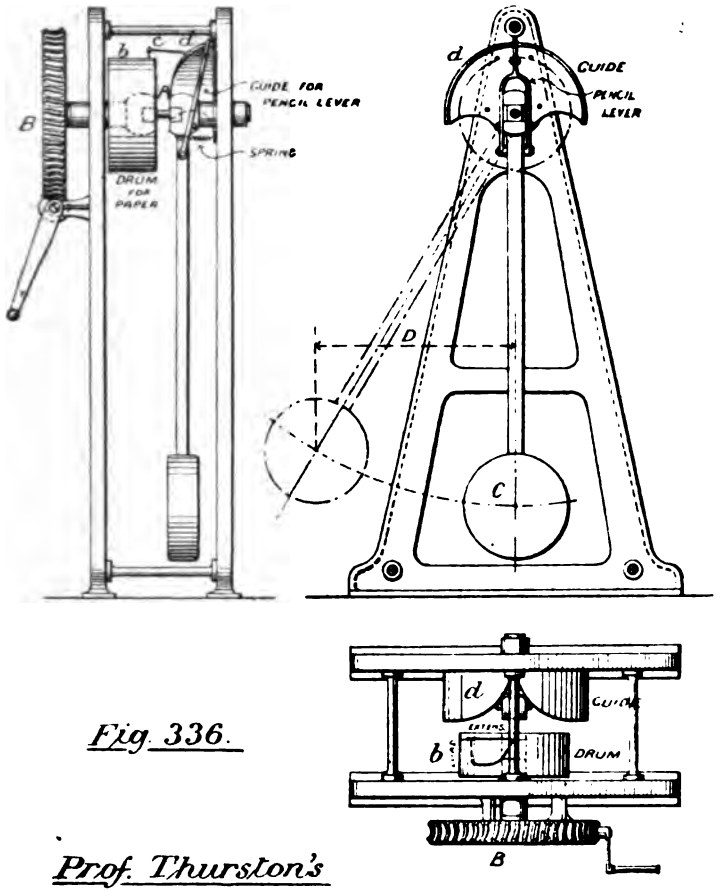

Fig. 336.

Prof. Thurston's Torsional Testing Machine.

is for admission of large specimens in a compression machine. The specimen at A_1 is placed at *c*, and the plunger *d* guided within a cylinder. As one shackle *a* slides within the other

Digitized by Google

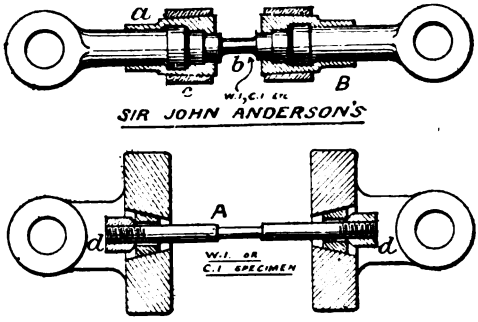

Fig. 337. Tension Shackles.

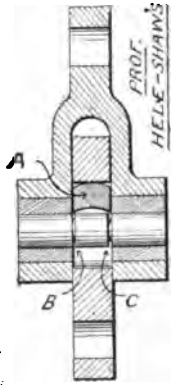

Shearing Shackles.

Fig. 339.

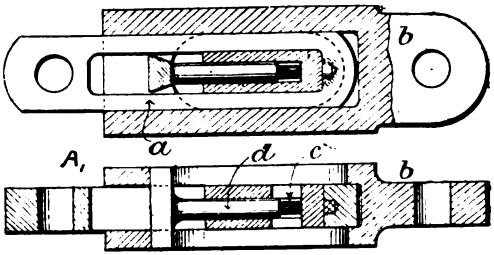

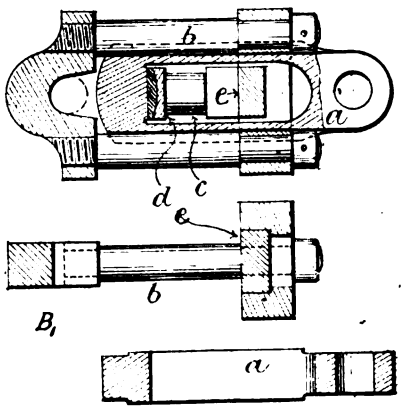

Compression Shackles.

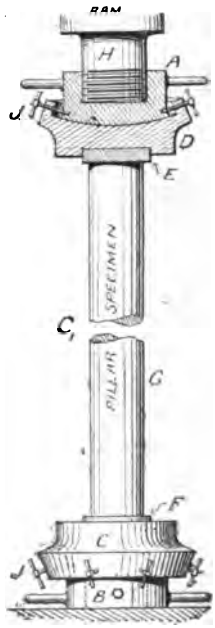

Fig. 338.

Digitized by Google

shackle *b*, a very good axial thrust is obtained. Professor Unwin's shackles at B_1 receive the test piece between a hard block *e*, and spherical surfaces *d*, and the parts are shown separately to make their construction clear. The Emery machine is provided, for compression, with spherical nuts A and B, upon which lie convex plates or tables D and C, and the hard seatings E F receive the thrust. C and D are adjusted to the specimen by means of the handles J J. In the shearing shackles at Fig. 339 (designed by Mr. Wicksteed for Professor Hele-Shaw), a knife A adjusts itself so as to give equal pressure at B and C, while the specimen is nicked down to localise the strain. The torsion grips at A, Fig. 336, have sockets to receive a square bar turned down in the mid portion; and Fig. 340 illustrates a pair of bending shackles where knife edges B B are adjustable for various lengths of specimen, and the shackle A is formed so as to indent the bar as little as possible.

Strain Measuring.—At first it was considered sufficient to know the breaking load in tension, then Mr. Hodgkinson showed the necessity for compression tests, and Mr. Kirkaldy lastly pointed out that the contraction of area at fracture was not to be overlooked. Now it is considered imperative to know the breaking load and elongation (usually given per cent., or extension × 100), and advisable to obtain both load and extension within the elastic limit. A stress-strain diagram, as in Fig. 321, will show the whole life of the bar, and can be obtained in two ways: (1) by noting load and extension at several points during the experiment (the latter being measured by instruments of more or less precision), then plotting a diagram to these dimensions; or (2) by compelling the machine to make an autographic diagram.

Taking (1), the simplest method is to make a centre pop near each end of the specimen, and measure the distance between these by means of dividers; a better result is obtained by the use of a standard rod C (Fig. 341), and wedge gauge D, placed between clamps A and B on the specimen; and very great accuracy by the aid of an extensometer. Such an instrument is absolutely necessary for the fine extensions within the elastic limit, and Fig. 342 shows a very effective form devised by Professor Unwin. A is the specimen to which Tee brackets C and D are clamped, both of which carry spirit levels F and J, while D in addition supports the measuring pillar G. Within G is a fine screw carrying a

Digitized by Google

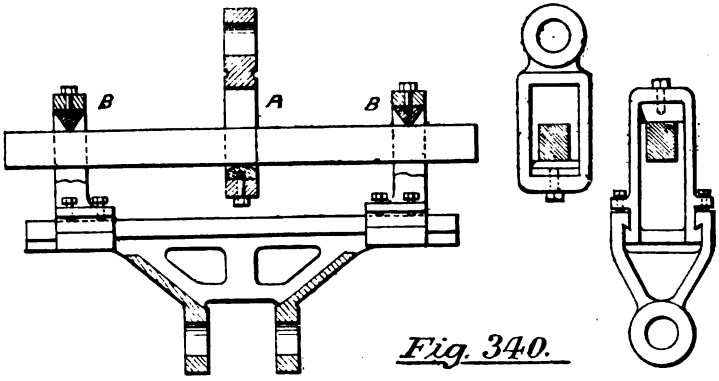

Fig. 340.

Bending Shackles (FOR WICKSTEED MACHINES)

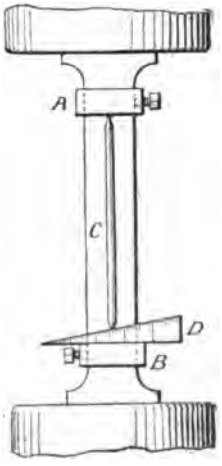

Wedge Gauge.

Fig. 341.

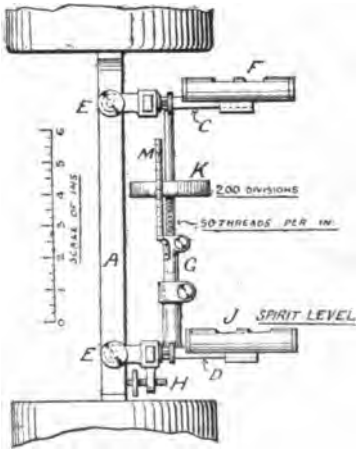

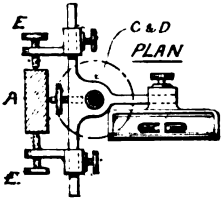

Fig. 342.

Prof. Unwin's Extensometer.

Digitized by Google

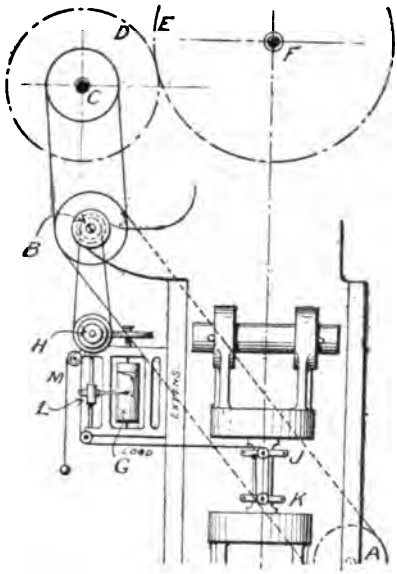

PROF. UNWIN'S

Fig. 343.

Autographic Stress-Strain Recording Apparatus

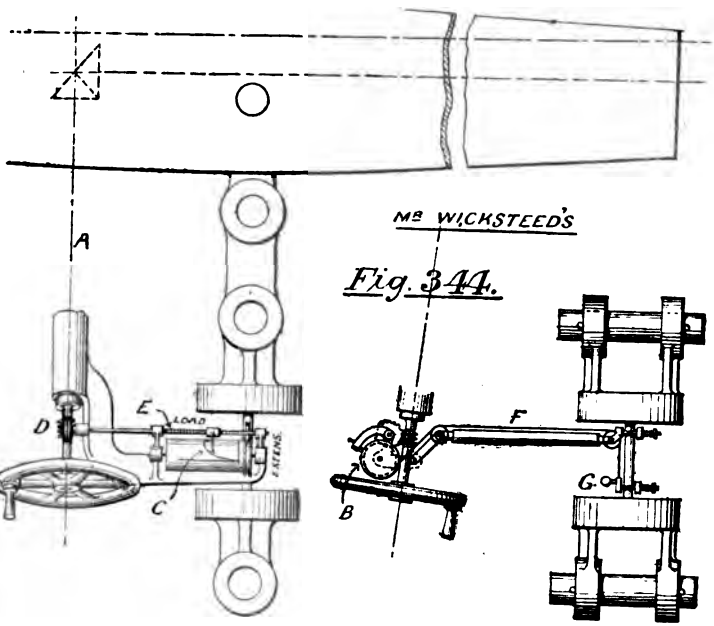

MR WICKSTEED'S

Fig. 344.

Digitized by Google

micrometer disc K having 200 divisions, and the strip M is divided into inches and fiftieths. Whenever the zero mark on K comes round to M, the divisions are read upon M only, but if K be turned by one of its divisions, the fiftieth on M is further divided by 200, and the advance is $\frac{1}{200} \times \frac{1}{50} = \frac{1}{10,000}''$, which is the accuracy of the machine. In practice, J is first levelled, and F raised till level, by advancing the screw against C, and the length obtained both before and during the experiment. (*See Appendix II.*)

Autographic Test Diagrams show many details in the curve not obtainable by other methods. Among the earliest were those of Professor Thurston, obtained by the machine in Fig. 336.* Paper is laid on the drum *b*, while a specially-formed guide *d* compels the pencil *c* to move proportionally to the arm D in a direction at right angles to the plane of the latter, thus representing the load; and the extension, measured in degrees, is given by the rotation of the drum itself relatively to the pendulum.

Although Mr. Wicksteed has obtained good diagrams by using the pressure water to represent the load, the method is not considered advisable, in view of the resistances, which may be variable. Better results are obtained by the apparatus in Figs. 343 and 344. The first will be understood by comparing with Fig. 331. The rotation of the jockey-weight screw being proportional to the load, it follows that the screw-turning gear may also be used to rotate a paper drum G, and thus represent stresses, while a pencil L may be moved vertically by a wire from the specimen, to show the extension. B and H are cone pulleys which drive the drum through worm gear, and at the same time allow of change of load scale; and the wire is returned upon itself before leaving the clips J K so as to mark the extension to twice the natural scale. A is the hand wheel, connected to the countershaft B by belting, and C is the auxiliary shaft, which turns screw F through spur gear.

To avoid errors of belt slip between C and H the gear in Fig. 344 has been introduced. Here the screw is turned by mitre gear through shaft A, and a pencil C represents the load, being traversed by screw at E turned by worm-gear D. At the same time the drum B is rotated for extension by a wire F from the specimen, and a hammer weight G releases the wire when rupture

* The writer's attention has been called to Mr. Cawley's apparatus used in Japan, which probably antedated the above. Fig. 346*b* was obtained from it.

Digitized by Google

occurs. This apparatus has been applied in Professor Hele-Shaw's machine.

Stress-strain Diagrams, as obtained principally by the previous apparatus, will now be shown (*see* Figs. 345 *and* 346). The largest number of experiments have been made in tension, and our list of compression and shear diagrams is but meagre. In every case the authority has been cited, and where possible the unit stress and length of specimen given.

Deductions.—Mild steel and good wrought iron have long plastic extensions and considerable contraction at rupture (see C, F, G, L). Stronger steels are less ductile, as at B and D, while steel castings, A, are very short, though the strength may be higher than shown. Cast iron, Q, has really no elastic stage, though Hodgkinson fixed an apparent limit, but brass, O, is better off, and is much more plastic. N is a very fine diagram for aluminium bronze, showing great ductility and high elastic limit. Torsional and transverse diagrams (S and R) are not essentially different from tension in character, but compression diagrams take quite a different form, V being a typical example, the plastic portion tending always to curve in an opposite direction to that of tension. T is an experiment on long pillars held loosely in sockets to prevent bending; and diagrams Q, T, U, and V have all been plotted.

Raising the Elastic Limit.—If the load be carried a little beyond the primitive elastic limit and allowed to remain, say, for 24 hours, then removed, the bar will shorten slightly; but on re-stressing, a new elastic limit will be found at a little higher load than that just removed. Repeating the experiment beyond the second limit, a third limit may be found, and so on until the bar breaks. All this is beautifully given by diagram M, and also by diagram S, one plastic curve bounding all the limits, and it is clearly shown why English engineers consider the breaking load the only reliable test of a material. (*See Appendices I. and II.*)

Local Extension.—In Fig. 347 a test strip has been taken 12″ long, and divisions marked across it at one inch apart, then the actual extensions within each inch measured, and set up as ordinates on the line A B; C D E is the curve showing distribution of extension, and is seen to increase very greatly towards the fifth

Digitized by Google

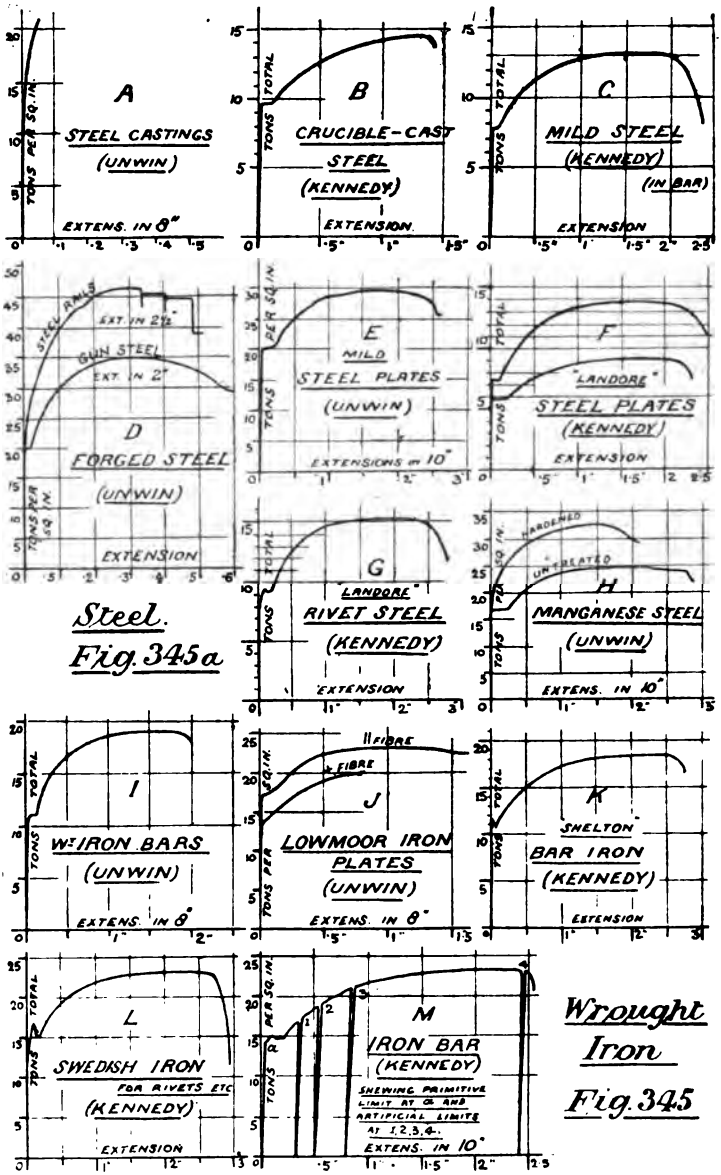

Steel.
Fig. 345a

Wrought Iron
Fig. 345

Stress-Strain Diagrams.

Digitized by Google

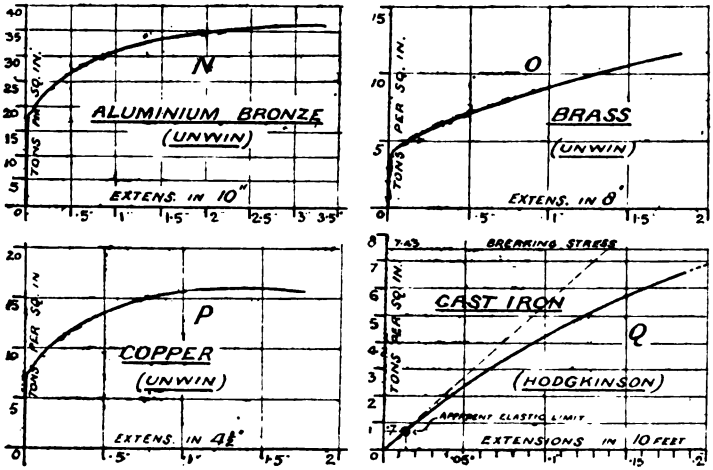

Tension Diagrams Fig. 346a.

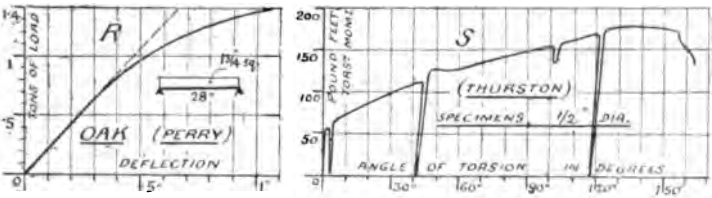

Bending Diagms Fig. 346b. Torsion Diag. Fig. 346c.

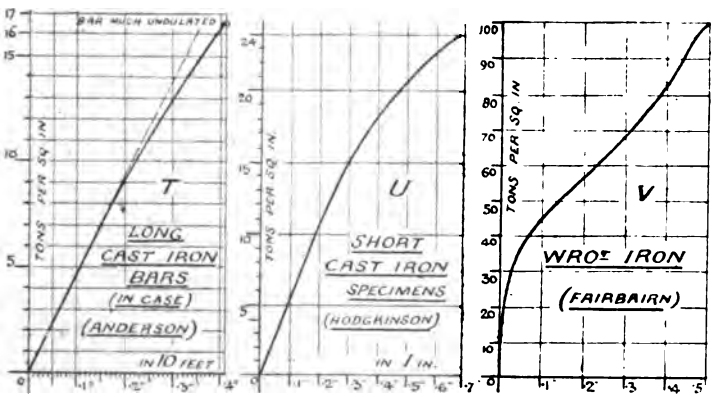

Compression Diagrams. Fig. 346.

Digitized by Google

inch, where fraction occurred. This indicates the necessity of stating elongations somewhat as follows:—'28·2 per cent. in a length of 8",' or '25·8 per cent. in a length of 10",' meaning ·282 or ·258 of the original length; and the breaking stress should be measured as maximum load ÷ original area.

Diagrams showing the elastic line have recently been drawn by Mr. Thos. Gray, of America, by means of the double apparatus shown at Fig. 348. The paper drum is rotated by worm gear, as in Fig. 343, to give the load, and there are two pencils H and C, both connected to the specimen by wires; but while A is connected to C through the single lever B and gives an ordinary diagram, D gives motion to H through the triple set of levers E, F and G, and thus the stroke of H is very greatly magnified. Three diagrams are shown, where the higher curves are drawn by C, and the lower or elastic lines by H. Of course two extension scales are required.

Admiralty Tests. All war material must be tested as follows, the data serving also as a general standard:—

	Material.	Tensile breaking stress in tons per sq. in. of original area.	Elongation.
	W. I. Ship Plates (1st class) ...	22 ‖ 18 +	...
	W. I. Ship Plates (2nd ,,) ...	20 ‖ 17 +	...
	W. I. Section Bars	22	...
	W. I. Boiler Plates	21 ‖ 18 +	...
For Gun Mountings.	Steel Ship Plates	26 to 30	20 °/₀ in 8"
	,, Castings (intricate)	28 minimum	13½ °/₀ in 2"
	,, ,, (Roller Paths and Pivot Plates)	36 to 40: yield point at 18 min.	13½ °/₀ in 2"
	,, ,, (Girders, Cylinders, and 'Ordinary')	28 minimum	18½ °/₀ in 2"
	Steel Rivets	27 maximum	...
	,, Forgings (general)	28 to 35	28 to 24 °/₀ in 2"
	,, ,, (Piston Rods) ...	32 to 35	28 to 24 °/₀ in 2"
	,, ,, (Rollers and Roller Paths)	38 to 45	22 to 16 °/₀ in 2"
	,, Plates	28 to 32	20 °/₀ in 8"
	Gun Metal (ordinary)	14 minimum	7½ °/₀ in 2"
	,, (for hydraulics) ...	,,	3½ °/₀ in 2"
	Manganese Bronze	28	25 °/₀ in 4"

Digitized by Google

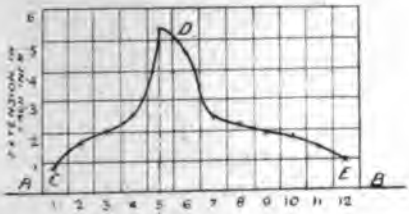

Distribution of Extension

Fig 347.

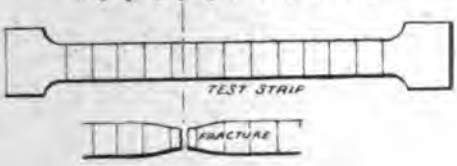

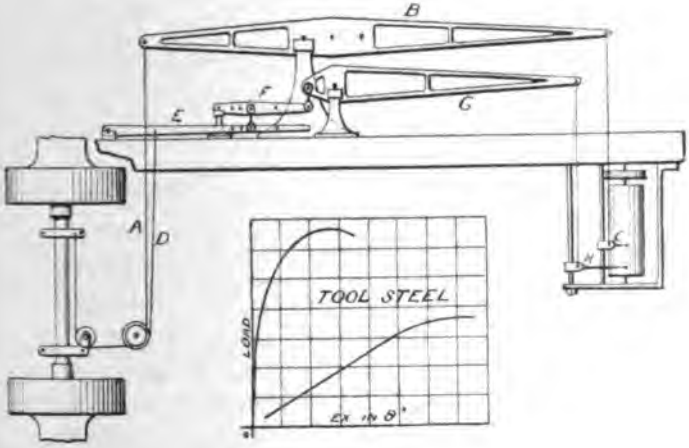

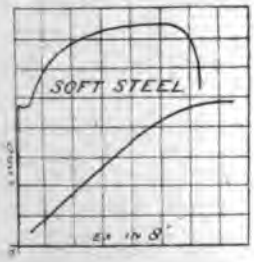

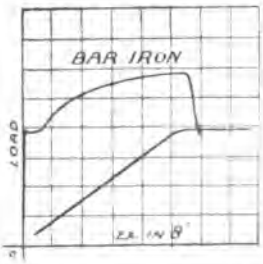

Double Test Diagrams & Apparatus. Fig 348.

Digitized by Google

(Lloyd's tests for Boiler Steel are the same as for Admiralty Ship Plates.)

Hot tests for angle bars are shown in Fig. 349 at A, B, C, and D; for T bars at E and F; and for channel bars at G. They consist in a bending of the flanges in either direction, or a complete flattening.

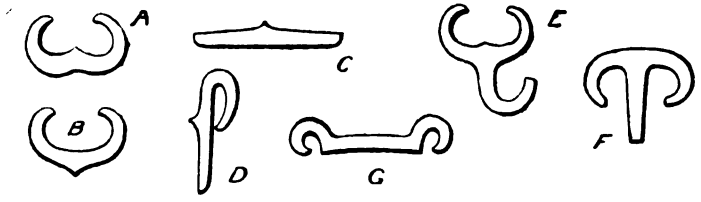

Admiralty Tests for Rolled Bars. Fig. 349

Cold tests are obtained by notching and breaking to observe the fracture. Sometimes, as with armour-plate bolts, a tensile fracture is obtained by dropping a weight of one ton through 30 feet, and rails are often bent by a falling weight to imitate the conditions of practice. (*See Appendix II, p.* 834)

Rivets should sustain hammering while hot till but $\frac{1}{8}$" thick, and punching crosswise with a tool of their own diameter, without cracking in either case.

Wöhler's Law.—In 1871, Herr Wöhler conducted experiments on variation of stress, and showed conclusively that the range of variation was a factor in lowering the breaking load, so that a bar under variable stress would break much more easily than if an unchangeable load were applied. His experiments were so conducted that the test bars withstood two or three million changes of load before breaking. Prof. Unwin, who has given great attention to endurance tests, deduces the following general equation:

$$f_2 = \frac{S}{2} + \sqrt{f_1^2 - x\,S f_1}$$

where f_1 = original breaking stress in tons sq. in.

S = stress variation in terms of f_2 in tons sq. in.

x = a constant deduced from experiment

= (1·5 for Wrought Iron and Mild Steel
  2·0 for Hard Steel)

f_2 = new breaking stress in tons per sq. in.

Digitized by Google

Taking $x = 1{\cdot}5$, three simple cases may be deduced:

(1.) A steady or dead load:

$$\underline{f_2 = f_1}$$

(2.) A simple live load, or 'suddenly-applied load,' viz., one removed and replaced continually and instantly, but without velocity.

$$S = f_2 - 0$$

and
$$f_2 = \frac{f_2}{2} + \sqrt{f_1^2 - 1{\cdot}5 f_2 f_1}$$

Simplifying, squaring, and solving the quadratic obtained:

$$\underline{f_2 = {\cdot}6 f_1}$$

(3.) Reversal of stress, or alternate compression and tension of equal value, as in rotating shafts.

$$S \text{ is from } -f_2 \text{ to } +f_2 = 2 f_2$$

and
$$f_2 = \frac{2 f_2}{2} + \sqrt{f_1^2 - 1{\cdot}5 \times 2 f_2 f_1}$$

$$\underline{f_2 = \tfrac{1}{3} f_1}$$

Summing up, we have for:

Steady load ... $f_2 = f_1$
Live load ... $f_2 = {\cdot}6 f_1$ for Wrought Iron: ${\cdot}8 f_1$ for Steel
Reversible load $f_2 = \frac{1}{3} f_1$ for Wrought Iron: $\frac{4}{9} f_1$ for Steel

or roughly, the strengths are as 3 : 2 : 1. (*See Appendices I. and II.*)

Factor of Safety.—The working stress must not only be within the primitive elastic limit of the stress diagram, it must also be further reduced on account of stress variation, and still further because the working conditions can rarely be all estimated; the correction for all these being made as follows:

$$\text{Load or unit stress (safe)} = \frac{\text{load or unit stress (breaking)}}{\text{factor of safety}}$$

If a foundation factor of 3 be used to cover uncalculated effects, and to keep within the elastic limit, then, by Wöhler:

	on breaking load,	or about on elastic load
A steady load requires a factor	3	2
A reversible load requires a factor	$3 \times 2 = 6$	4
A live load requires a factor	$3 \times 3 = 9$	6

Digitized by Google

And the following table, deduced from practice, is fairly explained:

FACTORS OF SAFETY.

Material.	Dead Load.	Live Load.	Moving Load.
Wrought Iron and Mild Steel	3	5 to 8	9 to 13
Hard Steel	3	5 to 8	10 to 15
Bronzes	5	6 to 9	10 to 15
Cast Iron and Brass	4	6 to 10	10 to 15

Average Stresses adopted in practice.—We must now sum up the results obtained in testing, as given by the best authorities, and form a table of breaking and safe stresses. But as there are high and low qualities for each material, and samples of each quality vary so much, our tabulations can only be the averages of many averages.

Breaking Stresses.—Thus *cast iron* may vary from 5 to 15 tons per square inch in tension, 22 to 58 in compression, and 4 to 5 in shear. *Wrought iron* breaks at from 15 to 30 tons in tension, and 10 to 22 tons in shear. The strength of *steel* increases with the carbon it contains, but as a rule its elongation is simultaneously decreased. *Steel plates* should have but $\frac{1}{4}$ per cent. *Cementation steel* reaches very high strengths, varying from 40 to 67 tons per square inch in tension, some samples of tool steel yielding 88 tons; and tempering increases its strength. *Steel castings* bear from 15 to 34 tons with reasonable elongation. *Copper* depends on mechanical treatment. Cast, it supports 10 tons; rolled into plates, 14 tons; and drawn into wire, 20 tons. *Brass* has 8 to 13 tons per square inch tension, and *gun metal* 10 to 23 tons.

There is some difficulty in collecting good results for compression. If the specimen be ductile it flattens out, and then, as Rennie said, 'the resistance becomes enormous.' Brittle materials are more easily dealt with. Besides, tension has been looked upon as a sufficient test for all materials, and thus the compression and shear columns are in many cases vacant. In such cases we may take compression = tension, and shear = ·7 of tension.

Digitized by Google

The safe stresses given in the table are those usually adopted in English practice, and have a factor of 5 or 6 on the breaking stress. Continental engineers take the elastic strength as their guide, but its unstable character prevents its adoption as the standard in this country. In deciding upon the working stress, the designer should, however, consider well the following four heads :—

1. *Elastic limit.*—Some idea of its position should be obtained. Compare E and Q, Figs. 345 and 346, a higher proportionate stress being allowable in the former.

2. *Variation of stress.*—The condition of loading should be found with care.

3. *Unknown actions.*—Endeavour to ascertain to what extent these occur, and whether they form an important part of the total load.

4. *Quality of material.*—If possible, a test for all material should be insisted on, both for ultimate load and elongation: preferably also for contraction of area and elastic strength. This will enable the designer to fix his working strength with great exactness.

TABLE OF THE AVERAGE BREAKING STRESSES OF MATERIALS AND SAFE STRESSES FOR ORDINARY LIVE LOADS (IN TONS PER SQ. IN.).

Material.	In Tension.		In Compression.		In Shear.	
	Breaking.	Safe.	Breaking.	Safe.	Breaking.	Safe.
Steel ('crucible cast' for strong forgings and tools)	45	8	80	8	—	5
Steel (mild, for general forging)	35	7	—	7	—	5
Steel Plates (and rivet steel)	30	6	—	6	24	5
Steel (for castings) ...	30	5	—	5	—	3½
Manganese Bronze ...	30	5	—	5	—	3½
Wrought Iron (forgings)	25	5	22	4	20	3½
Phosphor Bronze... ...	25	4	—	4	—	3
Wrought Iron Plates ...	22	4	—	4	16	3
,, ,, + ...	18					
Muntz Metal	22	3½	—	3½	—	2½
Copper	13	2	26	2	11	1½
Gun Metal	12	2	—	2	—	1½
Brass	11	1½	—	1½	—	1
Cast Iron	7½	1¼	45	4	5	1

Digitized by Google

The quantities in this table are given in tons, because the numbers are thus more easily remembered, and because it is the Engineer's language. Fig. 350 shows them diagramatically.

(*See Appendix II.*)

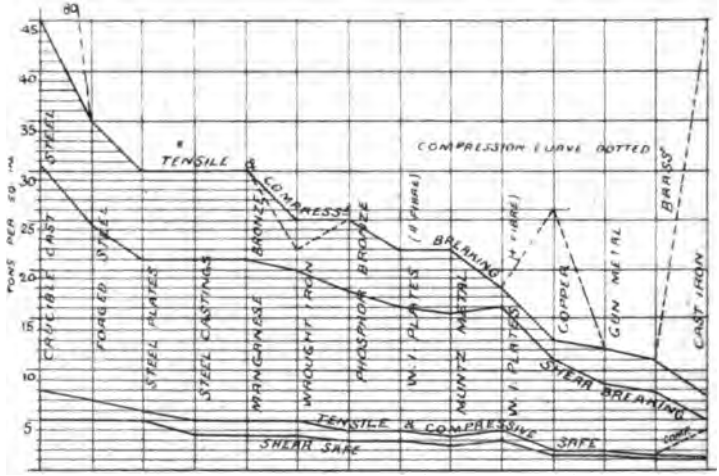

Average Stresses for Materials *Fig. 350.*

The Proportioning of Structures and Machine Parts by Calculation.—The equality of action and reaction is the starting point in constructive calculation. Whether the load be applied directly or through a lever arm, the external forces must balance the internal stresses, and we have for the two cases:

(Direct action). Total load = Total stresses.

(Lever action). Moment of load = Moment of stresses.*

which are our general strength equations.

Classification of Stress Action. — Practical cases of simple or compound stress may be arranged under ten heads :—

* A moment = force × lever arm.

Digitized by Google

Kind of Stress.	Some Cases.
1. Tension	Lifting rods, chains, bolts, ropes, boiler shells, pipes and cylinders, boiler stays, flywheel [rims.
2. Compression	All short pillars.
3. Shear	Punching and shearing, rivets, pins, cotters, coupling bolts, keys.
4. Torsion (momental shear)	Short shafts, spiral springs.
5. Bearing	Plate edges on rivets, cotter edges, and cantilevers.
6. Bending (momental compression and tension)...	Beams, axles, boiler end plates, slide bars, teeth of wheels.
7. Bending + Tension ...	Crane hooks.
8. Bending + Compression	Long pillars, boiler flues, ships' davits, connecting rods.
9. Torsion + Bending ...	Long shafts, crank arms.
10. Torsion + Compression...	Propeller shafts.

Tension Stress-Action.—Unit stress × area of section will give total stress. Therefore :—

$$\text{Load} = \text{Total stress.}$$
$$W = f_t\, a.$$

In the case of steam or water pressure the load is unit pressure × area pressed upon, and

$$p^{\text{tons}} \times \text{area of boiler end, or piston, in square ins.} = f_t\, a.$$

Of course f_t may be either 'breaking' or 'safe,' and W or p will vary in like manner.

Example 1.—Find safe load for following sections, at 5 tons per square inch. (1) 3 ins. dia. (2) 3 ins. dia. with $\frac{3}{4}$" cotterway. (3) 3" tube with 2" hole. (Eng. Exam, 1892.)

(1) $a = \pi r^2 = \frac{99}{14}$ $\therefore$ $W = fa = 35{\cdot}35$ tons.

(2) $a = \pi r^2 - \frac{3}{4}d = \frac{135}{28}$ $\therefore$ $W = fa = 24{\cdot}10$ tons.

(3) $a = \pi r_1^2 - \pi r_2^2 = \frac{55}{14}$ $\therefore$ $W = fa = 19{\cdot}64$ tons.

Digitized by Google

Example 2.—With 6 tons safe static stress for W.I., find (1) dia. of bar to carry 20 tons ; and (2) the dia. when *in addition* 30 tons are suddenly applied. (Eng. Exam., 1886.)

(1) $W = fa$, and $a = \frac{W}{f} = 3{\cdot}33$ $\therefore$ $d = 2\sqrt{\frac{a}{\pi}} = 2{\cdot}06''$

(2) $f = 3$ tons for the live load $a = \frac{W}{f} = 10$

Area for live load = 10

„ „ dead „ = 3·33

Total area = 13·33

And $d = 2\sqrt{\frac{a}{\pi}} = 4{\cdot}12''$.

Example 3.—Find the total stress on a W.I. crane chain 25 feet long, when a load of 20 tons drops through 6 ins., the stress per square inch not exceeding 5 tons. (Eng. Exam., 1886.)

Putting all measurements in tons and feet,

$$E = \frac{29{,}000{,}000}{2240} = 12{,}945 \text{ tons.} \quad \text{But } E = \frac{f}{\delta^{ft}} \text{ and } \delta^{ft} = \frac{f}{E}$$

$$\therefore \quad \Delta^{ft} = \frac{fL}{E} = \frac{5 \times 25}{12945} = {\cdot}00965 \text{ ft}$$

$$W(H + \Delta^{ft}) = \frac{F}{2} \times \Delta^{ft}$$

$$20({\cdot}5 + {\cdot}00965) = F \times {\cdot}5 \times {\cdot}00965, \quad \text{and } F = 2114{\cdot}73 \text{ tons.}$$

Example 4.—A steady load of five tons produces a deflection of half an inch. Find the height a weight of 2 cwt., must fall to produce the same deflection. (Eng. Exam., 1888.)

$$W(h + \Delta) = \frac{F}{2} \times \Delta$$

$$\frac{2}{20}\left(h + \frac{1}{2}\right) = \frac{5}{2} \times \frac{1}{2} \quad \text{and} \quad h = \left(\frac{5}{4} - \frac{1}{20}\right)10 = 12''.$$

Example 5.—Find the dia. of a W.I. pump rod, the bucket being 20 ins. dia., and the water pressure 25 lbs. per square inch : $f = 2\frac{1}{2}$ tons. (Eng. Exam., 1889.)

$$p^{\text{tons}} \times \text{area of bucket} = f_t\, a$$

$$25 \times 22 \times \frac{10 \times 10}{2240 \times 7} = 2{\cdot}5 \times \frac{22}{7} \times r^2 \quad \text{and } r = \sqrt{{\cdot}4464} = {\cdot}67''.$$

$$\therefore \quad d = 1\tfrac{3}{4}'' \text{ bare.}$$

Digitized by Google

The Strength of Chain.—Both sides of the link resist tension, so taking $f = 4$ tons safe :

$$W = 2 \times \pi\, r^2 \times 4 = 25{\cdot}12\, r^2$$

but $r = \frac{d}{2}$ $\therefore$ $W = 6{\cdot}28\, d^2$ tons safe load.

Sir Jno. Anderson deduces a simple rule from the above :

$$\frac{(\text{dia. in eighths})^2}{10} = \text{safe load in tons.}$$

Thus an inch chain bears $\frac{8 \times 8}{10} = 6{\cdot}4$ tons.

Strength of Ropes.—For *white hemp* $f_t = \frac{1}{2}$ ton safe. But as all ropes are measured by their circumference, and area $= \frac{\text{circ.}^2}{4\pi}$

$$\text{Strength of hemp rope} = \tfrac{1}{2} \times \frac{\text{circ.}^2}{4\pi} = {\cdot}04 \text{ circ.}^2 \text{ (tons).}$$

Wire rope has its members stated by their W.G. Referring to page 276, the total area may be reckoned : then let $f_t = 11\frac{1}{2}$ tons safe for iron or steel.

Strength of Pipes and Cylinders, pressed internally. Imagine a hemispherical vessel A, Fig. 351, hung by a string, and

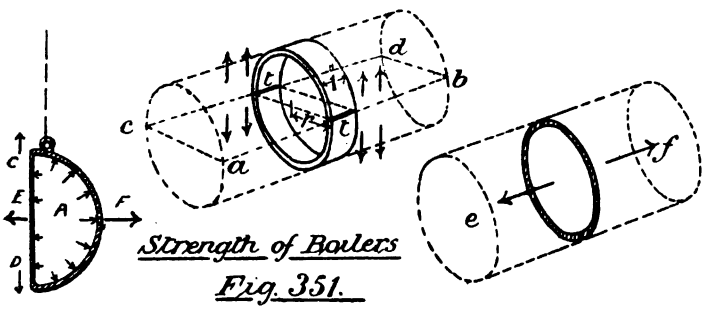

Strength of Boilers
Fig. 351.

pressed internally ; then, as the vessel moves neither to right or left, it follows that the total pressure on the curved surface *in direction* F is equal to that upon the flat surface. The flat surface is called the ' projected area ' of the curved surface.

Digitized by Google

First Case, Thin Cylinders.—A boiler, or thin cylinder *a b c d*. Fig. 351, tends to tear along the joints *a b* and *c d*. Examining a strip 1″ wide we obtain:

$$\left.\begin{matrix}\text{Internal load on} \\ \text{projected area}\end{matrix}\right\} = \left\{\begin{matrix}\text{safe strength of two sections of} \\ \text{plate (in tension).}\end{matrix}\right.$$

$$p^{\text{tons}} \times 2r \times 1 = f_t \times 2t \times 1.$$

$$\therefore \underline{p^{\text{tons}} r = f_t t.}$$

Suppose the plate tends to tear at a ring section as at *e f*, then

$$p^{\text{tons}} \times \pi r^2 = f_t \times 2\pi r \times t.$$

$$\therefore \underline{p^{\text{tons}} r = 2 f_t t.}$$

From this we find that

$$\text{Stress on longitudinal section} = \frac{pr}{t}$$

$$\text{and stress on transverse section} = \tfrac{1}{2}\frac{pr}{t}$$

so there is no fear of a boiler bursting at a cross seam. The above supposes the boiler plate to be of uniform construction throughout. But as the seams, whether welded or riveted, are much weaker than the 'solid' plate, a multiplier (η) must be introduced on the right side of the equation to reduce the quantity and show the strength at the joint. Then:

$$\eta = \text{efficiency} = \frac{\text{strength of joint}}{\text{strength of solid plate}}$$

or, efficiency per cent $= \eta \times 100$

$$\left.\begin{matrix}\text{For lap welded joints,} & \eta = \cdot 7 \\ \text{For single riveted joints,} & \eta = \cdot 5 \\ \text{For double riveted joints,} & \eta = \cdot 7\end{matrix}\right\} \text{roughly}$$

and the formula for boiler or pipe strength becomes

$$\underline{p^{\text{tons}} r = f_t t \eta}$$

Example 6.—A copper steam pipe 12″ dia. is to resist an internal pressure of 160 lbs. per sq. in. Find its thickness, if η for the brazed joint = 80%.

From above formula $\frac{160}{2240} \times 6 = 2 \times t \times \cdot 8$ $\quad \therefore \underline{t = \cdot 267 \text{ ins.}}$

Digitized by Google

Example 7.—Find the bursting resistance of a cast-iron pipe ½ in. thick and 10 ins. diameter. (Eng. Exam., 1887.)

$$p^{\text{tons}} r = ft \text{ (there being no seam)}$$

$$p^{\text{tons}} = \frac{ft}{r} = \cdot 75 \text{ ton} = 1680 \text{ lbs. per sq. in.}$$

Second Case, Thick Cylinders.—If cylinder thickness be small in comparison to diameter, the stress at the inner surface is practically the same as at the outside. But this is by no means the case with very thick cylinders. Then the following formula must be applied, devised by Lamé:

$$\frac{R''}{r} \text{ or } \frac{D}{d} = \frac{\sqrt{f_t + p^{\text{tons}}}}{\sqrt{f_t - p^{\text{tons}}}}$$

and the stress varies throughout the thickness, the hoop tension f_t being found at any intermediate radius i by the following formula:

$$f_h \text{ in tons} = \frac{p^{\text{tons}} r^2 (i^2 + R^2)}{i^2 (R^2 - r^2)}$$

Example 8.—A cast-iron hydraulic cylinder is 6″ internal diameter, and loaded with 1 ton per sq. in. pressure. Find (1) the thickness, and (2) construct a curve showing the hoop tension throughout the thickness.

$$\frac{R''}{r} = \frac{\sqrt{f + p^{\text{tons}}}}{\sqrt{f - p^{\text{tons}}}} = \sqrt{\frac{1{\cdot}25 + 1}{1{\cdot}25 - 1}} = \sqrt{9} \quad \therefore R'' = 9 \quad \text{and } t = 6''$$

The section of the cylinder is shown at Fig. 352, and the ordinates

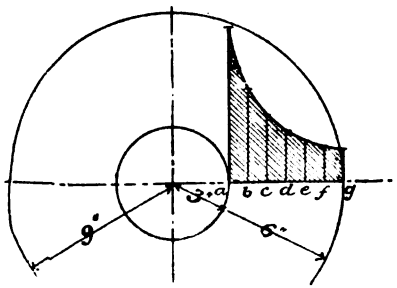

Strength of Thick Cylinders.

Fig. 352.

at $a\,b\,c\,d\,e\,f\,g$ show the hoop tension at the various rings, found as follows:

$$\text{at } a, \quad f_h = \frac{1 \times 9}{9} \frac{(81 + 9)}{(81 - 9)} = 1{\cdot}25 \text{ tons}$$

Similarly at b, $f_h = \cdot 76$ ton, at $c = \cdot 53$ ton, at $d = \cdot 406$ ton, at $e = \cdot 332$ ton, at $f = \cdot 283$ ton, and at $g = \cdot 25$ ton.

Digitized by Google

The curve is an equiangular or logarithmic spiral. Large guns are built of coils shrunk one over the other, so as to put the inner tube in a state of compression. The pressure of the explosion then tends to equalise the stress, by slightly adding to the outer tension, but more than removes the inner compression. When cold, a coil is slightly smaller than the core it is to envelop, according to the following rule:

$$\text{Diminution of coil dia.} = \frac{\text{mean dia.}^2 \times c}{\text{inside dia.}}$$

where c for the outer coils $= \cdot 00133$
c for next inner coils $= \cdot 00108$
c for next inner coils $= \cdot 00083$

Let an outer coil be 17″ outside and 12″ inside, then

$$\text{Diminution} = \frac{14{\cdot}5 \times 14{\cdot}5 \times \cdot 00133}{12} = \cdot 0233''$$

The same effect is produced in cast-iron cylinders by casting with a cold-water core, and thus much less thickness is required. (See Figs. 289, 298, 299, 300.) (*See Appendices I. and II.*)

'Casting Rule' for Steam Cylinders, &c.—With the usual steam and gas pressures, the previous formulæ give so small a thickness that the metal would not fill the sand mould during casting, so an empirical rule must be adopted to enable the cylinder or gas pipe to be cast, thus:

$$t = \cdot 18\sqrt{d}$$

This will represent the thickness for steam chest and other parts, but the cylinder body should be about $\frac{1}{4}$ in. thicker, to allow for reboring, and the flanges should also be stiffer.

Tensile Stress induced by Centrifugal Force.—When a weight w, attached to a string, is swung in a circular path, it exerts a pull upon the string represented by the formula

$$F^{lbs} = \frac{w v^2}{g R} \text{ lbs.} \quad (\text{where } v = \text{actual velocity of weight})$$

In a grindstone or flywheel this centrifugal pull exerts a tension between the particles of the material, which we shall examine in

Digitized by Google

Fig. 353. R is the average radius (radius of gyration) of the rotating flywheel rim, *a h b*. If w = the weight of a cub. inch of

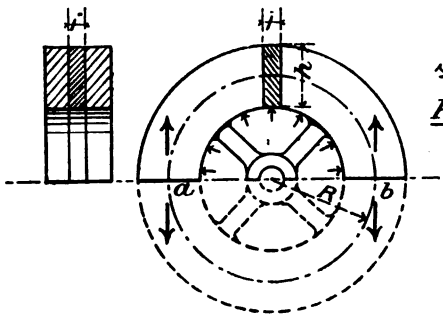

Strength of Fly Wheel Rim

Fig. 353.

the material, $w\,h$ is the weight of the darkly shaded solid, and its centrifugal force,

$$F^{lbs} = \frac{w\,h\,v^2}{g\,R}$$

But every such solid in the circumference acts radially as at A, Fig. 351, and the flywheel tends to burst at *a b*, as the boiler did at *t t*, Fig. 351.

$$\therefore \left.\begin{matrix}\text{Centrifugal force per}\\ \text{sq. in. of rim}\end{matrix}\right\} \times \text{projected area} = \left\{\begin{matrix}\text{safe strength of}\\ \text{strip section at } a\,b\end{matrix}\right.$$

$$\text{or} \quad \frac{w\,h\,v^2}{g\,R} \times 2\,r = 2\,f^{lbs}\,h$$

$$\text{and} \quad f_t \text{ lbs.} = \frac{w\,h\,v^2 \times 2 \times 12\,R}{g\,R \times 2\,h} = \frac{12\,w\,v^2}{g}$$

$$\text{then} \quad v = 1{\cdot}64\,\sqrt{\frac{f^{lbs}}{w}}$$

For cast iron, $w = {\cdot}26$ and $f^{lbs} = 1{\cdot}25 \times 2240$

$$\therefore \quad \text{Safe } v = 1{\cdot}64\,\sqrt{\frac{1{\cdot}25 \times 2240}{{\cdot}26}} = 170 \text{ ft. per sec.}$$

Digitized by Google

This velocity is reckoned for radius R, which for a flywheel may be taken at the centre of the rim, but for a grindstone

$$R = \frac{\text{external radius}}{\sqrt{2}} = \cdot 7 \text{ of external radius.}$$

A much less velocity (about 80 feet per second) is adopted in practice.

Strength of Bolts.—In an ordinary bolt with V thread, the nut being deep enough, the bolt must break by a combination of tension and torsion, ·13 of the bolt area being devoted to resist the latter, according to Unwin. In practice both are allowed for by putting a small value on the safe stress—3 tons per sq. in. for Wrought Iron, and 4 tons for Steel, estimated on the area at thread bottom. Cylinder covers must be bolted very tightly, and an initial screwing stress often resisted also, so the working stress per square inch may be:

	Steel bolts.	W. I. bolts.
For 3 feet cylinders	4 tons	3 tons
For 2 feet cylinders	3 tons	$2\frac{1}{4}$ tons
For 1 foot cylinders	2 tons	$1\frac{1}{2}$ tons

The diameter at thread bottom may be found from p. 213 and p. 192. Thus a $\frac{3}{4}''$ bolt has a thread ·1″ pitch, and depth of thread = ·1 × ·64 = ·064.

$$\therefore \text{ Dia. at thread bottom} = \cdot 75 - 2 \times \cdot 064 = \underline{\cdot 622}$$

$$\text{and area at thread bottom} = \frac{22 \times \cdot 311^2}{7} = \underline{\cdot 304}$$

No faced joints, except very small ones, should have bolts less than $\frac{3}{4}''$ dia., or they may be broken merely by screwing up,

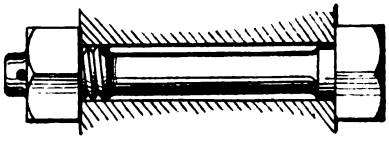

Fig. 354.

and their pitch should not be *greater* than six times the bolt diameter. In bolts that have to resist shock, the shank should be turned down, as in Fig. 354, to the diameter at thread bottom. (*See Appendix II.*)

Digitized by Google

STRENGTH OF BOLTS (WHITWORTH V THREAD).

Dia. of bolt in ins.	Sectional area at thread bottom.	Safe load at 4 tons per sq. in.	Safe load at 3 tons per sq. in.
¼	·027	·108	·081
⅜	·068	·272	·204
½	·121	·484	·36
⅝	·203	·812	·609
¾	·304	1·216	·91
⅞	·422	1·688	1·26
1	·554	2·216	1·66
1⅛	·697	2·788	2·09
1¼	·894	3·576	2·67
1⅜	1·06	4·24	3·18
1½	1·3	5·2	3·9
1⅝	1·472	5·888	4·416
1¾	1·753	7·012	5·25
1⅞	1·985	7·94	5·955
2	2·31	9·24	6 93
2⅛	2·66	10·64	7·98
2¼	2·925	11·7	8·77
2⅜	3·316	13·264	9·948
2½	3·732	14·928	11·196
2⅝	4·173	16·692	12·519
2¾	4·463	17·852	13·389
2⅞	4·944	19·776	14·832
3	5·45	21·8	16·35

Digitized by Google

In cylinders, if D = dia. of cylinder
D_1 = dia. of bolt circle, d_1 = dia. at thread bottom
$k d_1$ = circumferential pitch, d = dia. at thread top.

Number of bolts $= \frac{\pi D_1}{k d_1}$ and strength of one bolt $= \frac{f_t \pi d_1^2}{4}$

But total strength = total load.

$$\text{or} \quad \frac{\pi D_1}{k d_1} \times \frac{f_t \pi d_1^2}{4} = \frac{\pi D^2}{4} p^{\text{tons}}$$

$$\therefore \quad d_1 = \frac{7}{22} k \frac{p^{\text{tons}} D^2}{f_t D_1}$$

And as $d_1 = \cdot 9d - \cdot 05$ (empirically) $\therefore \quad d = \frac{d_1 + \cdot 05}{\cdot 9}$

Example 9.—A cylinder 24″ dia. has a steam pressure of 100 lbs. per sq. in.: bolt circle, 28″ dia.: and circumferential pitch to be six times bolt diameter. Find bolt diameter and number of bolts required.

$$d_1 = \frac{7}{22} \times 6 \times \frac{100}{2240 \times 3} \times \frac{24 \times 24}{28} = \cdot 584$$

$$\therefore \quad d = \frac{\cdot 584 + \cdot 05}{\cdot 9} = \cdot 704, \text{ say } \tfrac{3}{4}''$$

Checking, we have:

Strength of bolts = total load

$$\cdot 91 \times \text{number} = \frac{100 \times 22 \times 144}{2240 \times 7}$$

and number of bolts = 20.

Finally pitch $= \frac{88}{20} = 4 \cdot 4''$ or six times bolt dia.

Compressive Stress-action, pure and simple, exists in few cases. The calculation is similar to that for tensional stress, and may be applied to all short columns (whose length is only ten or twelve times the diameter). Thus:

$$W = f_c a.$$

Digitized by Google

Example 10.—Find the thickness of a short, hollow, cast-iron column of 18″ outside diameter, to sustain a live load of 80 tons, plus a dead load of 100 tons. (Eng. Exam. 1888.)

Equivalent dead load $= 100 + (2 \times 80) = 260$ tons

$260 = 4\,a$ and $a = 65$ sq. ins.

But $a = \pi R^2 - \pi r^2 = 65$ or $\frac{22}{7}(81 - r^2) = 65$

and $r = \sqrt{60{\cdot}3} = 7{\cdot}8$ $\therefore$ $t = 9 - 7{\cdot}8 = 1{\cdot}2$ ins.

Shear Stress-Action rarely occurs alone, but pins and rivets are thus calculated: $W = f_s\,a$.

Strength of a Suspension Link (see Fig. 355).—The strength of one thin link in tension, at a and c; the shear

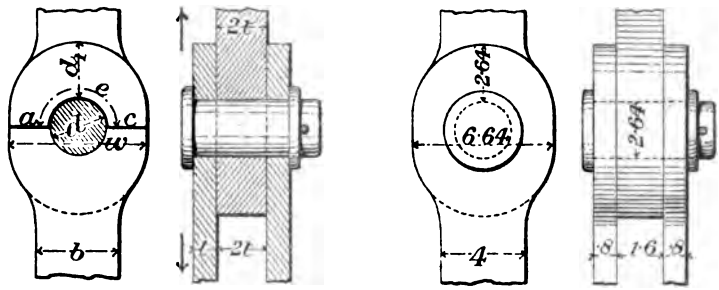

Strength of a Suspension Link *Fig. 355*

strength of the pin d; the strength at b; and the bearing stress on projected area of e, should each equal half the load:

(1) (2) (3)* (4) (5)

$$\therefore \quad \frac{W}{2} = f_t\,(w - d)\,t = \tfrac{3}{4} f_s \frac{\pi d^2}{4} = f_t\,b\,t = f_b\,d\,t$$

Let $f_t = 1$, $f_b = 1\frac{1}{2}$, and $f_s = \frac{3}{4}$.

By (4) and (5) $1 \times b\,t = 1\frac{1}{2}\,d\,t$ and $d = \underline{{\cdot}66\,b}$

By (2) and (4) $1\,(w - d)\,t = 1 \times b\,t$ and $w = \underline{1\ 66\,b}$

By (3) and (4) $\frac{3}{4} \times \frac{3}{4} \frac{\pi d^2}{4} = 1\,b\,t$ and $t = \underline{{\cdot}20\,b}$

By actual tests $d_1 = d$ $= \underline{{\cdot}66\,b}$

and the thick link must be $2\,t$ in thickness.

(*See Appendix IV.*)

* *See p.* 415.

Digitized by Google

Example 11.—A wrought-iron suspension bridge chain supports 32 tons. Find its dimensions and draw the joint to scale.

Here $f_t\,(b \times \cdot 2\,b) = 16$ tons and $b = \sqrt{16} = 4$

$\therefore\ d = \cdot 66 \times 4 = 2 \cdot 64$ $\quad d_1 = 2 \cdot 64$

$w = 1 \cdot 66 \times 4 = 6 \cdot 64$ $\quad t = \cdot 2 \times 4 = \cdot 8$

and the whole is drawn in Fig. 355.

Strength of Riveted Joints.—A boiler plate may be supposed to consist of similar links to the above, but with some redundant material between (see Figs. 356 and 357). The joint

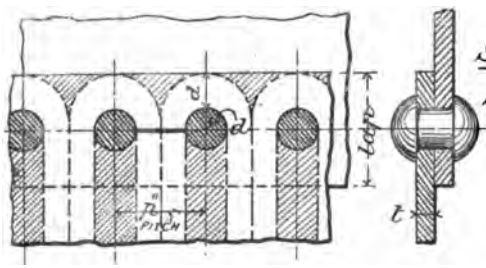

Strength of Single-riveted Lap Joint

Fig. 356.

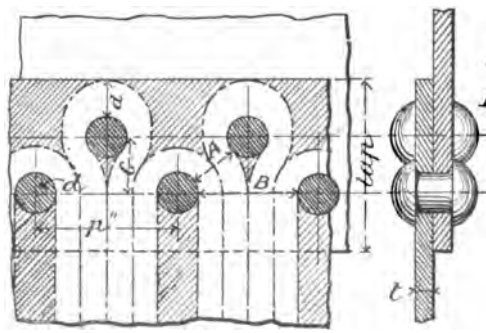

Strength of Double-riveted Lap Joint.

Fig. 357.

may give way by (1) shearing the rivet, (2) tearing the plate between rivets, (3) cross-breaking at d_1, and (4) crushing by reason of too thin a plate.

Digitized by Google

In a Single-riveted Lap Joint, as in Fig. 356, shear strength of one rivet = tensile strength of plate between two rivets,

$$\text{or } f_s \frac{\pi d^2}{4} = f_t (p'' - d) t$$

which is our general formula. But the rivet (up to 1″ plates) bears a definite proportion to the plate thickness, thus:

$$\left\{ \begin{array}{l} d = 1{\cdot}2\sqrt{t} \text{ before riveting} \\ d_1 = 1{\cdot}3\sqrt{t} \text{ after riveting, and } t = {\cdot}6\, d_1^2 \end{array} \right\}$$

Also steel plates and rivets are the usual practice, where $f_s = 5$ and $f_t = 6$. Putting these in the formula, we have

$$\frac{5 \times 22 \times d_1^2}{7 \times 4} = 6\,(p'' - d_1)\,{\cdot}6\, d_1^2$$

$$\therefore \text{ pitch} = 1{\cdot}09 + d_1$$

which shows that the space between rivets is a constant quantity for all plates up to 1″ thick. Also lap = 3 times d. (*See Apps. I. & III.*)

SIZES OF RIVETS AND PLATES (IN INCHES).

Plate thickness.	$\sqrt{t}$	Rivet.	Rivet hole.
$\frac{5}{16}$	·56	$\frac{11}{16}$	·73
$\frac{3}{8}$	·61	$\frac{3}{4}$	·8
$\frac{7}{16}$	·661	$\frac{13}{16}$	·86
$\frac{1}{2}$	·7	$\frac{7}{8}$	·91
$\frac{9}{16}$	·75	$\frac{15}{16}$	·975
$\frac{5}{8}$	·8	$\frac{15}{16}$	1·04
$\frac{11}{16}$	·83	1	1·08
$\frac{3}{4}$	·866	$1\frac{1}{16}$	1·125
$\frac{13}{16}$	·9	$1\frac{1}{16}$	1·17
$\frac{7}{8}$	·93	$1\frac{1}{8}$	1·2
$\frac{15}{16}$	·96	$1\frac{1}{8}$	1·25
1	1	$1\frac{1}{4}$	1·3
$1\frac{1}{8}$	1·06	$1\frac{1}{4}$	1·3
$1\frac{1}{4}$	1·1	$1\frac{1}{4}$	1·3

Digitized by Google

The Efficiency of joint has been already mentioned, and its value,

$$\eta = \frac{\text{strength of pierced plate}}{\text{strength of solid plate}} = \frac{p'' - d_1}{p''}$$

∴ for single riveted joint,

with $\frac{3}{8}''$ plate, $\eta = \frac{1{\cdot}09}{1{\cdot}09 + {\cdot}8} = \underline{{\cdot}56 \text{ or } 56\%}$

and with $1''$ plate, $\eta = \frac{1{\cdot}09}{1{\cdot}09 + 1{\cdot}3} = \underline{{\cdot}45 \text{ or } 45\%}$

The Strength of a Double-riveted Lap Joint (zigzag) can easily be discussed by reference to the 'virtual links' in Fig. 357. Clearly plate A must equal one rivet, while B equals two rivets, in strength. So the centres at A will be $1{\cdot}09 + d_1$, while those at B (called the pitch),

$$\underline{p'' = 2\,(1{\cdot}09) + d_1 = 2{\cdot}18 + d_1}$$

and $$C = \sqrt{(A + d_1)^2 - \left(\frac{B + d_1}{2}\right)^2}$$

The distance from rivet centre to plate edge will be $1\frac{1}{2}\,d$ as before, deduced from practice

and the efficiency $$\eta = \frac{2{\cdot}18}{2{\cdot}18 + d_1}$$

For $\frac{3}{8}''$ plate $\eta = \frac{2{\cdot}18}{2{\cdot}18 + {\cdot}8} = \underline{{\cdot}73 \text{ or } 73\%}$

For $1''$ plate $\eta = \frac{2{\cdot}18}{2{\cdot}18 + 1{\cdot}3} = \underline{{\cdot}625 \text{ or } 62\%}$

Example 12.—Find the various dimensions of lap joints for $\frac{3}{8}''$ boiler plates; (1) single riveted, and (2) double riveted.

(1) $d = \frac{3}{4}''$ and $\underline{d_1 = {\cdot}8 \text{ or } 1\frac{5}{16}''}$

$\underline{p'' = 1{\cdot}09 + d_1 = 1\frac{5}{16}''}$

$\underline{\text{lap} = 3 \times {\cdot}8 = 2\frac{7}{16}''}$

and the joint is drawn at Fig. 358.

Digitized by Google

(2) $p'' = 2{\cdot}18 + d_1 = 3''$

diagonal centres $= 1\frac{5}{16}''$

cross centres $= \sqrt{3{\cdot}75 - 2{\cdot}25} = 1\frac{3}{16}''$

lap $= 2\frac{7}{16} + 1\frac{3}{16} = 3\frac{5}{8}''$

and the drawing is given at Fig. 359.

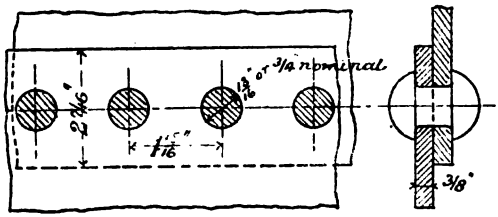

Fig. 358.

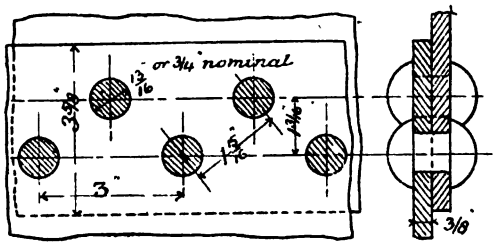

Fig. 359.

Example 13.—Find the pitch of a single-riveted lap joint where $d = \frac{7}{8}''$, $t = \frac{1}{2}''$, $f_s = 7800$ lbs. and $f_t = 10{,}000$ lbs. (Eng. Exam. 1886.)

$$f_s \frac{\pi d^2}{4} = f_t (p'' - d)\, t$$

$$\frac{7800 \times 22 \times 7 \times 7}{7 \times 4 \times 8 \times 8} = 10{,}000\,(p'' - \tfrac{7}{8})\,\tfrac{1}{2} \qquad \therefore \quad p'' = 1{\cdot}813 \text{ or } 1\tfrac{13}{16}''$$

Contour of Rivet Head.—Fig. 360 shows how to draw a cup or snap head, and a countersink. Mark out plate thickness and rivet diameter. Divide G B, by guesswork, into four equal parts, and at centre G strike arc D F. Lastly, with centre F and radius A E strike the cup curve. Both snap head and countersink have a diameter of $1\frac{5}{8}\,d$.

Strength of Chain-riveted Lap Joint.—The same elements are required as for zigzag riveting, for the same links have to pass. Centres A, Fig. 361, may be $1{\cdot}5 + d_1$, so that the angle a

Digitized by Google

may not be too large. The efficiency will be reckoned on the pitch line as before, because the joint is weakest along that line,

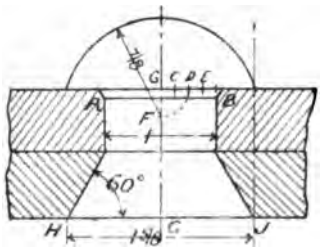

Rivet Head.

Fig. 360.

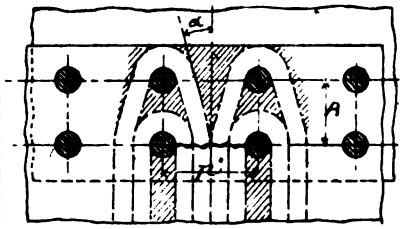

Chain-riveted Lap Joint

Fig. 361.

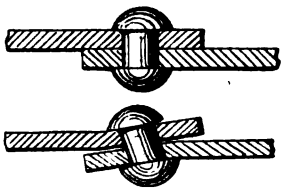

LAP JOINT

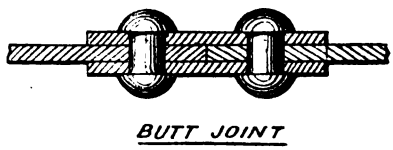

BUTT JOINT

Fig. 362.

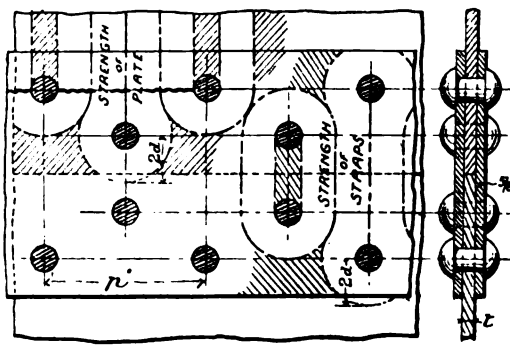

Strength of Double-rivd Butt Joint.

Fig. 363.

the *links being most crowded* there. The fracture should always be allowed to take place preferably on the pitch line.

All the seams given may have two butt straps instead of a lap, and the dangerous bending action be thereby removed, see Fig. 362.

Digitized by Google

As each rivet is then in double shear, and twice the previous strength, the pitch may be considerably increased, but this cannot be taken advantage of, except perhaps in the thickest plates, or staunchness would be affected.

A Double-riveted Butt Joint with two Coverplates is shown in Fig. 363, designed to use the full strength of rivets. Of course the links will be twice the width of a lap joint,

$$\therefore p'' = 4\ (1{\cdot}09) + d_1 = 4{\cdot}36 + d_1$$

and diagonal centres $= 2\ (1{\cdot}09) + d_1 = 2{\cdot}18 + d_1$.

The butt strap might be $\frac{1}{2}t$ in thickness, but is safer at $\frac{5}{8}t$. It might have to be thicker and should always be examined separately, as one plate equal to the two straps put together. The overlap may also have to be increased as at $2d$.

The Treble-riveted Butt Joint at Fig. 364 is taken from

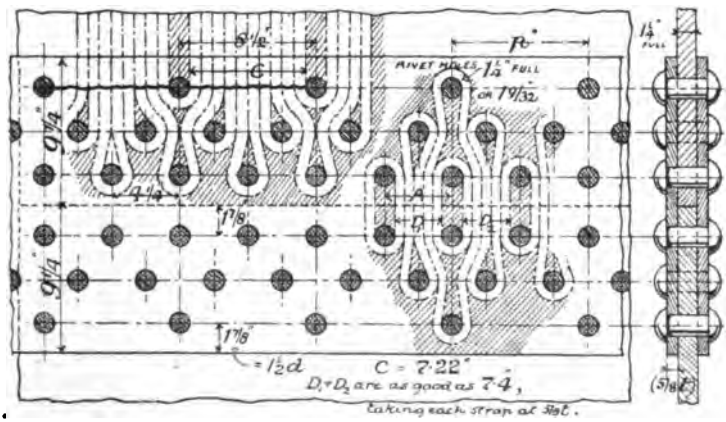

Strength of Treble-riveted Butt Joint Fig. 364

actual marine practice. Using the general formula (page 407), and remembering that 5 rivet strengths must pass at the pitch line:

Examining as a lap joint, width of one link = ·838"
and $p'' = 5\ (\cdot 838) + 1{\cdot}28 = 5{\cdot}47''$

Examining as a butt joint, width of one link = $\cdot 838 \times 2 = 1{\cdot}676''$
and $p'' = 5\ (1{\cdot}676) + 1{\cdot}28 = 9{\cdot}66''$

Digitized by Google

an intermediate value having been taken. Next, the butt straps must pass $2\frac{1}{2}$ rivets each at D_1 and D_2, or $D_1 + D_2$ must pass the same strength as C. But

$$\text{Plate at C} = 7{\cdot}22t.$$

$$\text{and Plate at } D_1 + D_2 = 5{\cdot}94 \times 1{\cdot}25t = 7{\cdot}4t,$$

or the links are most crowded at the pitch line.

Taking now the joint as designed,

$$\text{Strength of pierced plate} = (8{\cdot}5 - 1{\cdot}28)\ 1{\cdot}28 \times 6 = 55 \text{ tons.}$$

$$\text{Strength of rivets} = \frac{5 \times 22 \times 1{\cdot}28 \times 1{\cdot}28}{7 \times 4} \times 5 \times 2 = 64{\cdot}34 \text{ tons.}$$

$$\text{Strength of solid plate} = 8{\cdot}5 \times 1{\cdot}28 \times 6 = 65{\cdot}28 \text{ tons.}$$

$$\text{and} \quad \eta = \frac{55}{65{\cdot}28} = {\cdot}8425 \text{ or } 84\tfrac{1}{4}\,\%$$

The Tie Bar or Stringer Plate, Fig. 365, is an important deduction from the last example. By compelling the joint to break

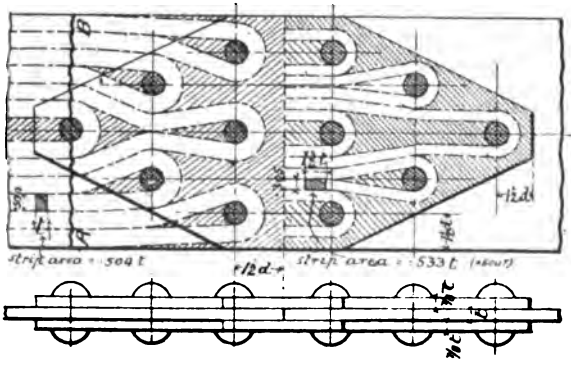

Fig. 365.

preferably at A B, *the plate is only weakened to the extent of one rivet.* The strips must not be bent abruptly, however, and the butt straps should always be examined separately, and their thickness increased until the links are narrowed sufficiently for all to pass; thus $\frac{7}{8}t$ is required in the example.

Digitized by Google

VALUES OF η FOR VARIOUS THICKNESSES OF PLATE AND VARIOUS FORMS OF JOINT, USING STEEL PLATES AND STEEL RIVETS, AND FULL STRENGTH OF BUTT JOINTS.

t	Dia. of rivet hole.	Single-riveted lap.		Single-riveted butt, with 2 straps.		Double-riveted lap.		Double-riveted butt, with 2 straps.		Treble-riveted with 1 strap.		Treble-riveted with 2 straps.	
		w'' = 1 rivet.	η	w'' = 2 rivets.	η	w'' = 2 rivets.	η	w'' = 4 rivets.	η	w'' = 5 riv.	η	w'' = 10 rivets.	η
$\frac{5}{16}$	·73	1·09	·59	2·18	·75	2·18	·75	4·36	·85	5·45	·88	10·9	·93
$\frac{3}{8}$	·8	1·09	·57	2·18	·73	2·18	·73	4·36	·84	5·45	·87	10·9	·93
$\frac{7}{16}$	·86	1·09	·56	2·18	·71	2·18	·71	4·36	·83	5·45	·86	10·9	·92
$\frac{1}{2}$	·91	1·09	·54	2·18	·70	2·18	·70	4·36	·82	5·45	·85	10·9	·92
$\frac{9}{16}$	·975	1·09	·53	2·18	·69	2·18	·69	4·36	·81	5·45	·84	10·9	·91
$\frac{5}{8}$	1·04	1·09	51	2·18	·68	2·18	·68	4·36	·80	5·45	·83	10·9	·91
$\frac{11}{16}$	1·08	1·09	·50	2·18	·67	2·18	·67	4·36	·79	5 45	·83	10·9	·91
$\frac{3}{4}$	1·125	1·09	·49	2·18	·66	2·18	·66	4·36	·79	5·45	·82	10·9	·90
$\frac{13}{16}$	1·17	1·09	·48	2·18	·65	2·18	·65	4·36	·78	5·45	·82	10·9	·90
$\frac{7}{8}$	1·2	1·09	·47	2·18	·64	2·18	·64	4·36	·78	5·45	·82	10·9	·90
$\frac{15}{16}$	1·25	1·09	·46	2·18	·63	2·18	·63	4·36	·78	5·45	·81	10 9	·90
1	1·3	1·09	·45	2·18	·62	2·18	·62	4 36	·77	5 45	·80	10·9	·90
$1\frac{1}{16}$	1·3	1·034	·44	2·068	·61	2·068	·61	4·136	·76	5·17	·79	10·3	·90
$1\frac{1}{8}$	1·3	·976	·43	1·958	·60	1·952	·60	3·914	·75	4·88	·79	9·96	·88
$1\frac{3}{16}$	1·3	·925	·41	1·850	·57	1·850	·57	3·700	·74	4·62	·78	9·25	·87
$1\frac{1}{4}$	1·3	·878	·40	1·756	·57	1·756	·57	3·512	·73	4·39	·77	8·78	·87

Digitized by Google

Remarks.—In cooling, the rivet exerts great grip on the plate, giving frictional strength to the joint, but caulking diminishes this, so it is not allowed for. Rivets over 6″ long would break in cooling, so must be hammered up cold.

The formula for boiler strength, $p^{\text{tons}}\, r = ft\,\eta$, can now be used to better advantage. Construct a table showing t and η under all conditions, and after finding $t \times \eta$ from the formula, choose such values of each as will meet the case when multiplied. Such a table precedes this page, where the pitch has been taken at its largest value in every case. This must be decreased to secure staunchness where necessary, as with the thinner plates in the last column.

Example 14.—A steel Lancashire boiler 8 ft. dia. is loaded with 100 lbs. per square inch. Find t, and indicate the joint you would use.

$$p^{\text{tons}}\, r = f_t\, t\,\eta \quad \therefore\ t\,\eta = \frac{100 \times 4 \times 12}{2240 \times 6} = \underline{\cdot 357}$$

1. Single riveted lap joint $\quad t\eta = \frac{3}{4} \times \cdot 49 = \cdot 367$
2. Single riveted butt joint
3. Double riveted lap joint $\quad t\eta = \frac{9}{16} \times \cdot 69 = \cdot 382$
4. Double riveted butt joint $\quad t\eta = \frac{7}{16} \times \cdot 83 = \cdot 363$

Something between (3) and (4) would have to be adopted; say (4) with $\frac{1}{2}$″ plate and spacing like (3) for staunchness.

Example 15.—Two lengths of mild steel tie rod 7″ × 1″ are to be connected with double butt straps. Determine dimensions and efficiency. (Hons. Mach. Constr. Exam., 1893.)

$d_1 = 1\cdot 3$. Centre to edge $= 1\cdot 5 \times 1\cdot 25 = 1\cdot 875$

w″ for one rivet. in double shear $= 2 \times 1\cdot 09 = 2\cdot 18$

$7 - 1\cdot 3 = 5\cdot 7$ width of pierced plate : $\therefore\ \frac{5\cdot 7}{2\cdot 18} = \underline{3 \text{ rivets say.}}$

Checking we have :

Strength of rivets $= 2 \times \frac{\pi d_1^2}{4} f_t \times 3 = \frac{2 \times 22 \times 1\cdot 3 \times 1\cdot 3 \times 5 \times 3}{7 \times 4} = \underline{39\cdot 83 \text{ tons}}$

Strength of pierced plate $= (7 - 1\cdot 3) \times 1 \times 6 = \underline{34\cdot 2 \text{ tons}}$

Digitized by Google

Strength of cover plates = strength of pierced plate.

$\therefore$ $(7 - 2{\cdot}6) \times t \times 2 \times 6 = 34{\cdot}2$ and $t = {\cdot}647$ say $\frac{3}{4}''$

Strength of solid plate $= 7 \times 6 = 42$ tons

$$\therefore \eta = \frac{34{\cdot}2}{42} = {\cdot}81$$

The drawing is given at Fig. 366.

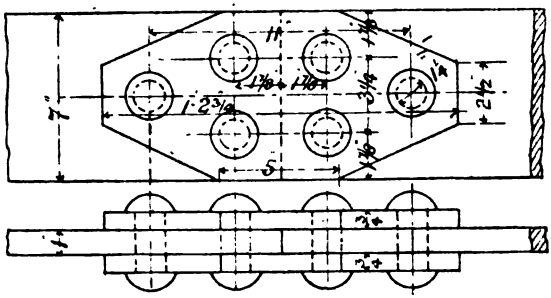

Fig. 366.

Strength of Pins and Bolts in Shear.—Unless a pin fits tightly and thoroughly grips the plates, as in good riveting, partial bending may occur, and a smaller unit stress must be adopted, thus:

For round sections ● ← safe stress $= \frac{3}{4} f_s$

For square sections ■ ← safe stress $= \frac{8}{9} f_s$

For diagonal sections ◆ ← safe stress $= \frac{8}{9} f_s$

Strength of Cotter Joint.—Fig. 367 shows this joint connecting two lengths of pump rod. It may break (1) by shearing the cotter; (2 and 3) by crushing the cotter; (4) by tearing the socket; (5) by tearing the solid rod; and (6) by tearing the pierced rod. Supposing all parts be made of equal strength and of forged steel, where $f_t = 7$ tons, $f_s = 5$ tons, and $f_b = 14$ tons,* we have:

(1) Strength of cotter for shear $= 5 \times 2 \times b\,t = 10\,b\,t$

(2) ,, cotter for bearing on pierced rod $= 14\,d_1\,t$

(3) ,, cotter for bearing on socket $= 14\,(D_2 - d_1)\,t$

(4) ,, socket $= 7\left[\frac{22}{7 \times 4}(D_1^2 - d_1^2) - (D_1 - d_1)t\right]$

* f_b may be much greater than f_c if the material be well sustained all round.

Digitized by Google

(5) Strength of solid rod $= 7 \times \frac{22}{7 \times 4} d^2 = \frac{11}{2} d^2$

(6) „ pierced rod $= 7\left(\frac{22}{7 \times 4} d_1^2 - d_1 t\right) = \frac{11}{2} d_1^2 - 7 d_1 t$

(7) Strength at b_2 for shear $= 5 \times 2 \times b_2 d_1 = 10 b_2 d_1$

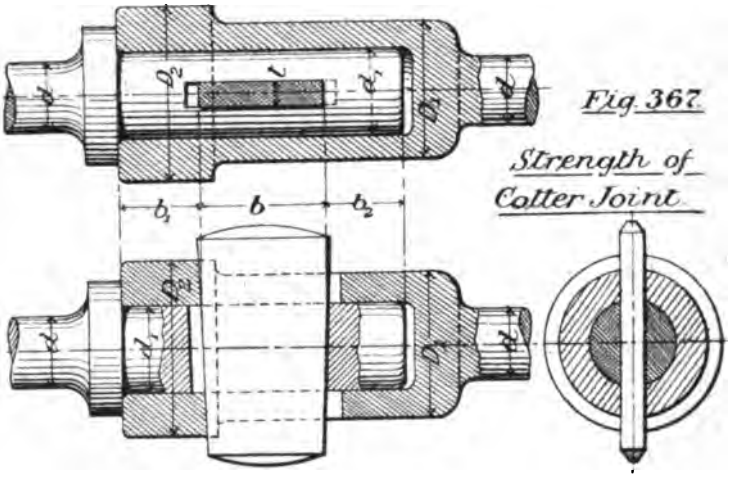

Fig. 367.

Strength of Cotter Joint.

Equating, we obtain:

By (2) and (5): $14 d_1 t = \frac{11}{2} d^2$ and $d_1 t = .393 d^2$ ..... (8)

By (6), (5), and (8): $\frac{11}{2} d_1^2 - 7 d_1 t = \frac{11}{2} d^2$ $\therefore \underline{d_1 = \sqrt{1.5 d^2} = 1.22 d}$ (9)

By (2) and (5): $14 d_1 t = \frac{11}{2} d^2$ $\therefore \underline{t = .322 d}$ ..... (10)

By (1), (5), and (10): $10 b t = \frac{11}{2} d^2$ $\therefore \underline{b = 1.71 d}$ ..... (11)

By (4), (5), (9), and (10): $\frac{11}{2}(D_1^2 - d_1^2) - 7t(D_1 - d_1) = \frac{11}{2} d^2$ $\therefore \underline{D_1 = 1.62 d}$ (12)

By (3) and (5), (9) and (10): $14(D_2 - d_1)t = \frac{11}{2} d^2$ $\therefore \underline{D_2 = 2.44 d \text{ or } 2 d_1}$ (13)

By (7) and (5): $10 b_2 d_1 = \frac{11}{2} d^2$ $\therefore \underline{b_2 = .45 d}$ ..... (14)

The values at (12) and (14) are both unreasonably small, and are increased in practice to $\underline{D_1 = 2 d}$; and $\underline{b_1 = b_2 = \frac{3}{4} b = 1.28 d}$.

Digitized by Google

Example 16.—A foundation bolt with square head (Fig. 368) is secured by a cotter. Find D, b, and t in terms of d, where f_t, f_s, and f_b vary as 1 : $\frac{3}{4}$: 2 respectively. (Hons. Mach. Constr. Exam. 1886.)

Following the previous calculations:

$$D = 1{\cdot}08\,d, \quad b = 1{\cdot}44\,d, \quad \text{and} \quad t = {\cdot}363\,d.$$

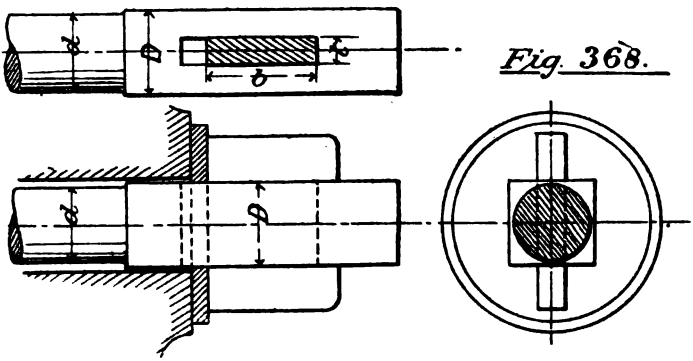

Fig. 368.

Torsional Stress-Action unallied with bending occurs only in very short shafts. In any case the two actions must be separately considered. Fig. 369 shows a shaft under twist, the external load being caused by the couple $d \times b\,c$, while the internal resistance of the shaft is shown by the couple $e \times f\,g$.*

$$\therefore \quad \text{External moment} = \text{moment of resistance of section}$$
$$\text{or} \quad W r = f_s Z_t$$

where Z_t, the modulus of section, is a number depending on the size and shape of the section.

Strength of Solid Round Shaft.—Let r be the outer radius of a solid shaft, Fig. 370. Imagining the section divided into concentric rings:

$$\text{Total stress on outer ring} = f_s \times 2\pi r \times t \qquad (1)$$

But f_s diminishes towards the centre because δ_s decreases:

$$\therefore \quad \text{Total stress at any other ring } r_1 = \frac{r_1}{r} f_s \times 2\pi r_1 \times t \qquad (2)$$

* A couple is formed by a pair of equal and opposite forces, and can produce turning effect only, being represented by 'one force × total arm.'

Digitized by Google

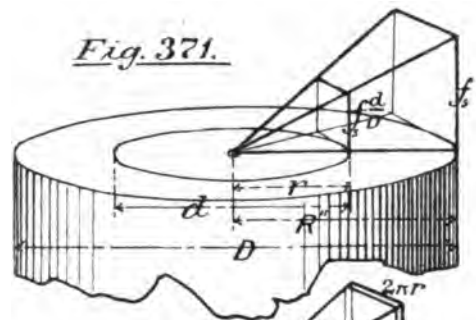

Fig. 371.

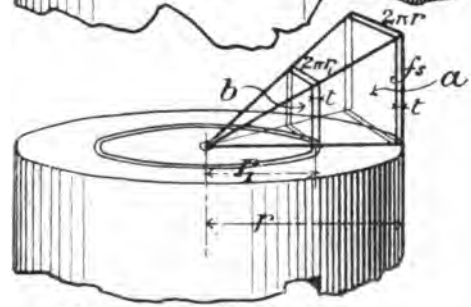

Fig. 370.

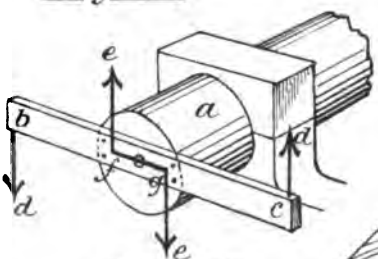

Fig. 369.

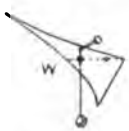

Strength of Shafts.

Fig. 372.

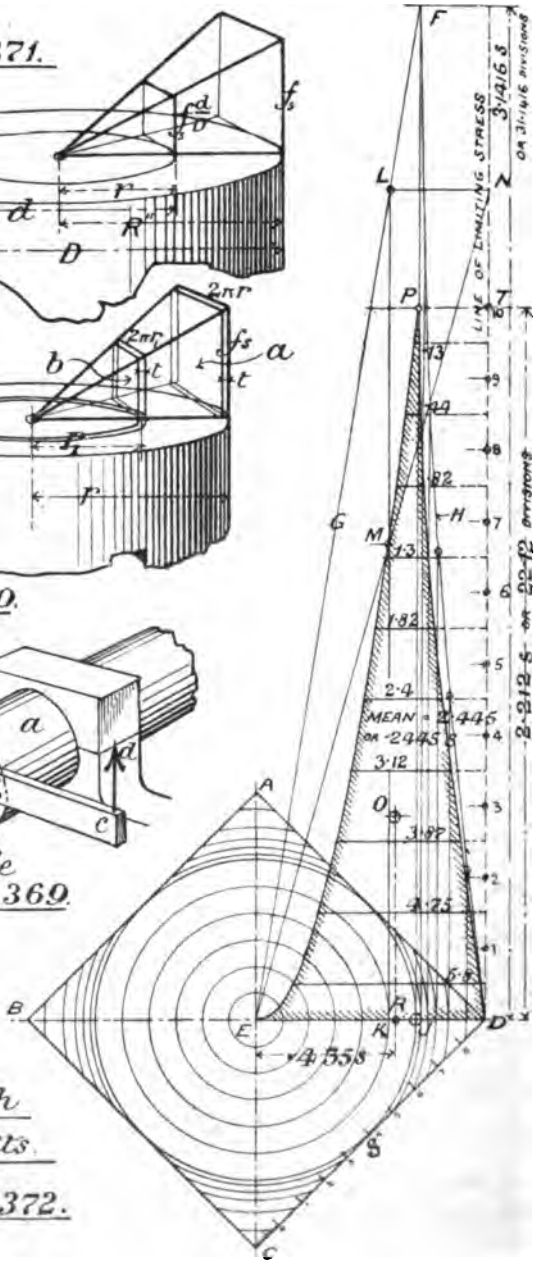

Digitized by Google

The first formula may be represented by the lamina at *a*, and the second by that at *b*, and the total of the stresses on *all* the rings will be given by the pyramid. Again:

$$\text{Moment of stress at ring } r = a \times r$$
$$\text{Moment of stress at ring } r_1 = b \times r_1$$

$\therefore$ Moment of all the stresses = contents of pyramid × average arm
= (base × $\frac{1}{3}$ height) × ($\frac{3}{4}$ height)

$$\therefore \text{Moment of resistance of section} = f_s \frac{2\pi r \times r}{3} \times \frac{3}{4} r = f_s \frac{\pi r^3}{2}$$

$$\text{(and putting } \frac{d}{2} = r\text{)} \quad = f_s\left(\frac{\pi d^3}{16}\right)$$

Strength of Hollow Round Shaft.—Fig. 371 shows a shaft of diameters D and *d*, externally and internally respectively. At radius R″ the stress is f_s, but at radius *r* it is proportionately less, being but $f_s \frac{d}{D}$. The strength of the hollow shaft will be found by deducting the strength of shaft *d*, as stressed *in situ*, from the strength of a solid shaft D.

$\therefore$ Moment of resistance = mom^t of solid shaft ***minus*** mom^t of core

$$= f_s \frac{\pi D^3}{16} - \left(f_s \frac{d}{D}\right) \frac{\pi d^3}{16} \quad = f \frac{\pi}{16}\left(\frac{D^4 - d^4}{D}\right)$$

(*See App. III.*)

Strength of Square Shaft.—In this case we shall not use the previous methods, but shall adopt a construction which, although requiring careful drawing, can be employed for any section, and is therefore general. In Fig. 372, A B C D is the shaft section, divided into concentric rings as before. Erect perpendiculars on E D to represent the length of every ring, and bound these by the figure E G L F D. J F = π S, and F E is a straight line, while the lengths between F and D are found by stepping off each set of four arcs with dividers. Now the stress will be greatest at D, and will decrease gradually to zero at E, and the product (f_s × ring area) will proportionately decrease, so the total stress may be obtained by imagining f_s to be constant, and each ring to have a value represented by the circumference decreased

Digitized by Google

according to its distance from D, the point of greatest stress. Thus, if the ring K L be projected to D N, and N E joined, the length K M will represent the virtual length of the ring if f_s be constant. Treating every perpendicular similarly, we obtain the curve E P D, and the shaded figure is the *virtual stress area*, or area of equal stress. Now cut out a copy of the shaded figure in thin cardboard, and, hanging loosely from a pin in two different positions, as at W, mark plumb lines from the pin in each case upon the paper. The crossing point will be O, the centre of gravity, or centre of all the stresses, and the arm = E R. Next, find the area of the figure. Divide s into 10 parts, and *measure everything in terms of these parts.* Divide D T into 10 parts, and draw horizontals from the middle of each part; then measure their intercepts on the figure. Adding all these figures (·13, ·44, ·82, &c.) and dividing by 10 we get the mean width 2·445, or ·2445 s. The height D T measures 22·12 parts, or 2·212 s, so the area = height × mean width, and

$$\underline{\text{Moment of resistance of section}} = f_s \times \text{stress area} \times \text{arm}$$

$$= f_s \times \text{height} \times \text{mean width} \times \text{arm}$$

$$= f_s \times 2{\cdot}212\ s \times {\cdot}2445\ s \times {\cdot}435\ s \quad = \underline{f_s({\cdot}235\ s^3)}\ *$$

St. Venant showed, however, in 1856, that the previous methods (Coulomb's ring theory) were not strictly applicable to any but circular sections, and gave the following:

$$\underline{\text{Moment of square section} = f_s({\cdot}208\ s^3)} \text{ or } {\cdot}88 \text{ of } \left\{ f_s({\cdot}235\ s^3) \right\}$$

because the greatest stress does not occur at the corners. To illustrate St. Venant, Thomson and Tait have imagined the shaft to be a box full of liquid, which, if rotated, would leave the latter behind somewhat, and the apices would cause two stresses—tangential and centripetal—to act on the particles, the former only being of momental value.

* Generally $T^m = f_s \frac{I}{y}$, $Z_t = \frac{I}{y}$, and $I = Z_t\, y$, where I is the polar moment of inertia (see p. 429).

Digitized by Google

The Strength of a Rectangular Section was given by St. Venant as follows:

Moment of resistance of rectangular section $= \cdot 2944 \frac{b^2 h^2}{\sqrt{b^2 + h^2}}$

while the pure ring theory would give $\cdot 1666\ b\ h \sqrt{b^2 + h^2}$, and the discrepancy increases with the ratio $\frac{h}{b}$

Thus if $b = 1''$ and $h = 2''$

$T_m = \cdot 5266$ ton ins. (1) by St. Venant; and $\cdot 745$ ton ins. [(2) by ring theory,

and (1) $= \cdot 7$ of the diagram value (2).

If $b = 1''$ and $h = 4''$

$T_m = 1 \cdot 142$ (1) and $2 \cdot 747$ (2) respectively

or (1) $= \cdot 41$ of diagram value.

Hexagonal shafts may be treated directly from diagram.

Strength of Shafts by Direct Experiment. — The following experimental figures may be used by way of correction. Moment of any shaft d_1 or s = Figure in table $\times$ (d^3 or s^3).

BREAKING MOMENTS OF SHAFTS 1" DIA. AND 1" SQUARE, IN TON-INCHES (ELSWICK EXPERIMENTS).

	Round.	Square.
Wrought Iron	5·35	6·83
Cast Iron...	5·31	6·78
Steel...	8·92	11·6
Yellow Brass	2 45	3·15
Cast Copper	2·15	2·74

A factor of 10 is to be used for short shafts and of 16 for long shafts, to secure stiffness. Strength is rarely the sole criterion.

Example 17.—Find the relative weights of two shafts of equal strength; the one solid, and the other hollow, with a hole half the outside diameter. (Eng. Exam. 1892.)

Digitized by Google

Moment of solid shaft = moment of hollow shaft.

$$f_s \frac{\pi}{16} d_1^3 = f_s \frac{\pi}{16}\left(\frac{D^4 - d^4}{D}\right) \qquad \therefore\ d_1 = \sqrt[3]{\frac{D^4 - (\frac{1}{2}D)^4}{D}}$$

Let D = 1. Then $d_1 = \sqrt[3]{\frac{1 - \frac{1}{16}}{1}} = \sqrt[3]{\frac{15}{16}} = .979$

$$\frac{\text{Weight of solid shaft}}{\text{Weight of hollow shaft}} = \frac{\pi r_1^2}{\pi(R^2 - r^2)} = \frac{.979^2}{1^2 - (\frac{1}{2})^2} = 1.277 : 1$$

Example 18.—Find the relative strengths of shafts :—
$2\frac{1}{2}$" round, $3\frac{1}{2}$" round, 3" square, and 5" × 2" rectangular.

Moment of $2\frac{1}{2}$" round $\propto \frac{\pi}{16} d^3 = .1963 \times 15.62 = 3.066$ say 31.
" $3\frac{1}{2}$" " $\propto$ " $= .1963 \times 42.87 = 8.415$ say 84.
" 3" square $\propto .208\, s^3 = .208 \times 27 = 5.616$ say 56.
" 5" × 2" rect. $\propto .2944 \frac{b^2 h^2}{\sqrt{b^2 + h^2}} = 5.467$ say 55.

Strength of Coupling Bolts.—Fig. 373 is the face view of

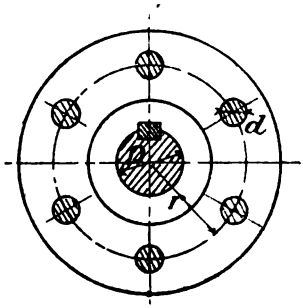

Strength of Coupling Bolts.
Fig. 373.
X = no. of bolts.

a flange coupling. As the bolts and shaft must be equally strong: and the allowable stress on the bolts = $\frac{3}{4} f_s$ (*see p.* 415)

Moment of bolts = moment of shaft

$$\left(\frac{3}{4} f_s \frac{\pi d^2}{4} X\right) r = f_s \frac{\pi}{16} D^3$$

$$d = \sqrt{\frac{D^3}{3Xr}} = .577 \sqrt{\frac{D^3}{Xr}} \quad (\textit{See App. II.})$$

Digitized by Google

Example 19.—Determine the diameter of the eight bolts of a flange coupling; the bolt circle being 23" dia. and its shaft 14".—(Mach. Constr. Hons. Exam. 1887.)

$$d = \cdot 577 \sqrt{\frac{14^3}{8 \times 11\frac{1}{2}}} = 3.15''$$

Example 20.—Compare the diameters of two shafts, their mean twisting moment being equal: in one (A) the fluctuation of moment is between $1\frac{1}{4}$ and $\frac{3}{4}$ the mean; and in the other (B) between twice and half the mean. (Hons. Mach. Constr. Ex. 1886.)

$$\text{Stress} \propto T_m$$

$\therefore$ In shaft A (by Wöhler formula), $S = (\frac{1}{2} \div 1\frac{1}{4}) f_2$ (*See App. II.*)

and $f_2 = \frac{\frac{1}{2} f_2}{1\frac{1}{4} \times 2} + \sqrt{f_1^2 - 1 \cdot 5 \times \frac{\frac{1}{2}}{1\frac{1}{4}} f_2 f_1}$ or $\frac{4}{5} f_2 = \sqrt{f_1^2 \cdot \frac{3}{5} f_2 f_1}$

Squaring and solving the quadratic: $f_2 = \cdot 865 f_1$

Similarly, in shaft B, $S = (1\frac{1}{2} \div 2) f_2$

and $f_2 = \frac{1\frac{1}{2} f_2}{2 \times 2} + \sqrt{f_1^2 - 1 \cdot 5 \times \frac{1\frac{1}{2}}{2} f_2 f_1}$ and $f_2 = \cdot 714 f_1$

The diameters must be made to meet greatest T_m.

$T_m = f_2 \frac{\pi d^3}{16}$: and $d \propto \sqrt[3]{\frac{T_m}{f_2}}$: also let mean $T_m = 1$.

Then, for A, $d \propto \sqrt[3]{\frac{1}{\cdot 865}} = 1 \cdot 125$

and, for B, $d \propto \sqrt[3]{\frac{2}{\cdot 714}} = 1 \cdot 41$

} or as $1 : 1\frac{1}{4}$ exactly.

Strength of Sunk Keys may be investigated, though *flat keys* (A, Fig. 374) and *saddle keys* (B, Fig. 374) cannot be satis-

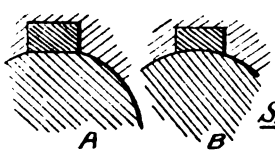

Fig. 374.

Strength of Keys.

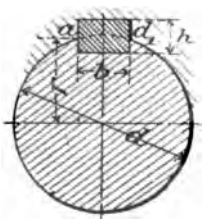

Fig. 375.

factorily determined. Referring to Fig. 375, we must make (1) bearing surface at h, (2) shear through $a\,d_1$, and (3) shaft d, all of equal strength. Taking $f_b : f_s :: 2 : \frac{3}{4}$,

Digitized by Google

Moment of shaft = moment of key (bearing) = moment of key (shearing)

$$f_s \frac{\pi d^3}{16} \quad = \quad f_b \frac{h}{2} \frac{l}{2} \frac{d}{2} \quad = \quad f_s b l \frac{d}{2}$$

(3) (1) (2)

By (3) and (1) $\frac{3}{4} \times \cdot 1963\, d^3 = \frac{2}{4} hl\, d \quad \therefore hl = \cdot 2944\, d^2 \quad (4)$

By (1) and (2) $\frac{2\, hl\, d}{4} = \frac{3}{4} bl \frac{d}{2} \quad \therefore \underline{h = \tfrac{3}{4} b} \ldots\ldots\ldots (5)$

Let $\underline{b = \cdot 3\, d}$ Then by (5) $\underline{h = \cdot 75 \times \cdot 3 = \cdot 225\, d}$

By (4) $hl = \cdot 2944\, d^2$ and $\underline{l = 1 \cdot 3\, d}$

In practice the following rules are adopted :

$$\underline{b = \tfrac{1}{4} d + \tfrac{1}{8}''} \text{ and } \underline{h = \tfrac{1}{8} d + \tfrac{1}{8}''}$$

$$\text{Then } \underline{l = \frac{\cdot 2944\, d^2}{\frac{1}{8} d + \frac{1}{8}}}$$

Angle of Torsion, or the angle through which one end of a shaft turns relatively to the other under a given stress.

$$C = \frac{\text{shear stress}}{\text{shear strain}} = \frac{f_s^{\text{lbs}}}{\delta_s} \quad \text{and} \quad \delta_s = \frac{f_s^{\text{lbs}}}{C}$$

Referring to Fig. 376 and putting θ in circular measure $\left(\text{viz. } \frac{\text{arc}}{\text{rad.}}\right)$

$\theta = \frac{\delta_s}{r}$ for every inch of shaft length. Substituting $\frac{f_s^{\text{lbs}}}{C}$ for δ_s

$$\underline{\theta \text{ total} = \frac{f_s^{\text{lbs}}}{C r} \times l \quad = \frac{2 f_s^{\text{lbs}} l}{C d}}$$

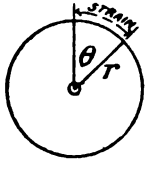

Fig. 376.

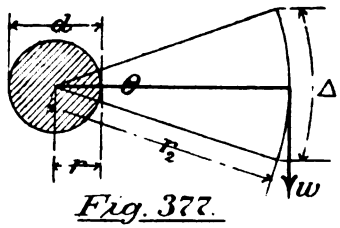

Fig. 377.

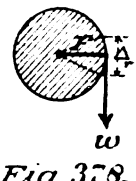

Fig. 378.

If a weight w produce a twist θ (Fig. 377), then

$$\theta = \frac{\Delta}{r_2} = \frac{2 f_s^{\text{lbs}} l}{C d} \quad \text{But } w r_2 = f_s^{\text{lbs}} \frac{\pi d^3}{16} \text{ and } f_s^{\text{lbs}} = \frac{16\, w r_2}{\pi d^3}$$

Digitized by Google

$$\therefore \underline{\Delta = \frac{2 f_s^{\text{lbs}} l r_2}{C d} = \frac{2 w r_2 \times 16 l r_2}{\pi d^3 C d} = \frac{w r_2^2 l}{C d^4} \times 10{\cdot}18}$$

This can be referred to radius r (Fig. 378) if w be increased. Notice that strength $T_m \propto d^3$, while stiffness $\frac{I}{\theta} \propto d^4$.

Example 21.—The angle of torsion of a round W. I. shaft is to be one degree for every 3 feet of length, and the maximum stress is to be 8000 lbs. per sq. in. Find the one diameter to satisfy both conditions. (Hons. Mach. Constr. Exam. 1889.)

$$\theta = \frac{2 f_s^{\text{lbs}} l}{C d} \quad \text{or} \quad \frac{22 \times 2}{7 \times 360} = \frac{2 \times 8000 \times 36}{10{,}500{,}000 \times d} \quad \therefore \underline{d_1 = 3{\cdot}14''}$$

Example 21*a*.—The angle of torsion being limited to one degree for each 10 feet of length, find the diameter of shaft to transmit 100 H. P. at 50 revs. per m. (Hons. Applied Mech. Exam. 1892.)

As above $\quad \frac{22 \times 2}{7 \times 360} = \frac{2 \times f \times 120}{10{,}500{,}000 \times d} \quad$ and $f = 763{\cdot}8 d$

By *p.* 508 $\quad d^3 = 320{,}810 \frac{100}{f \times 50} \quad$ and $f = \frac{641{,}620}{d^3}$

$$\therefore \quad 763{\cdot}8\, d = \frac{641{,}620}{d^3} \qquad \text{and} \qquad \underline{d = 5{\cdot}38}$$

Strength of Helical (Spiral) Springs.—In the round wire spring (Fig. 379) the pull is exerted axially, and any section d is in torsion.

$$\therefore \quad \underline{w r = f_s^{\text{lbs}} \frac{\pi d^3}{16}}$$

Extreme elastic stress for steel = 89,000 lbs.

and working stress $= \frac{89{,}000}{3} = 29{,}600$ lbs.

For square-sectioned steel (Fig. 380),

$$\underline{w r = f_s^{\text{lbs}} (\cdot 208\, d^3)}$$

and for rectangular sections,

$$\underline{w r = f_s^{\text{lbs}} \left(\cdot 2944 \times \frac{b^2 h^2}{\sqrt{b^2 + h^2}} \right)} \quad \text{(See } p. \text{ 421.)}$$

Digitized by Google

Deflection of Helical Springs.—This may be found by imagining the wire uncoiled, and treated as a straight shaft. Let l = length of wire from A to B, and n = number of coils in that length (Fig. 379).

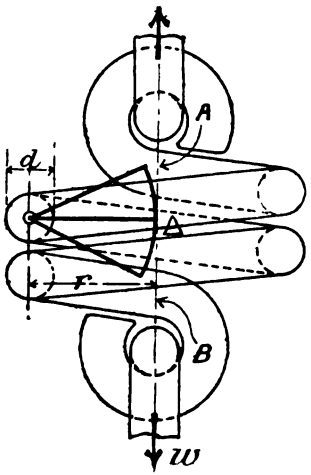

Fig. 379.

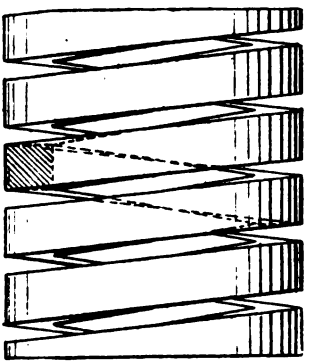

Fig. 380.

Helical Springs.

$l = 2\pi r n$, and $\Delta = \frac{2 f_s^{\text{lbs}} l r}{C d} = \frac{2 w r \, 16 \times 2\pi r n r}{\pi d^3 C d} = \frac{w n r^3}{C d^4} 64$.

N.B.—This is for round wire only. For square wire,

$$\Delta = \frac{w n r^3}{C d^4} 60{\cdot}5$$

and for rectangular wire,

$$\Delta = \frac{w n r^3}{C\left(\frac{b^3 h^2}{\sqrt{b^2 + h^2}}\right)} 42{\cdot}6$$

(*See App. II.*)

The above formulæ have been thoroughly tested for steel with C = 12,000,000 lbs. and found reliable with that value. The curve of work during extension or compression is found as for a bar (page 367).

Bending Stress-Action.—Fig. 381 represents a model devised by Prof. Perry to show the stresses occurring in a beam. Supposing W very heavy and beam l so light as to be negligible,

Digitized by Google

W causes a bending moment or turning effect round A equal to $W \times l$, and also exerts a downward pull to be balanced by weight W_1, so that $W = W_1$. The latter is called the shearing force, and is felt on every vertical section of the beam. W_1 and W really form a couple with the arm l, and this can only be balanced by another couple $= (t \text{ or } c) \times$ A B, a tension being felt in the upper fibres and a compression in the lower ones, shown respectively by the link A and strut B.

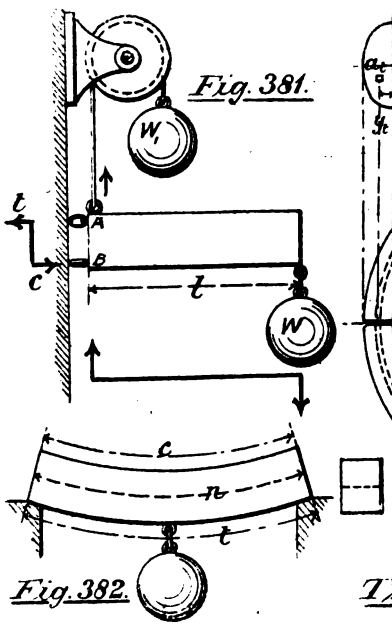

Fig. 381.

Fig. 382.

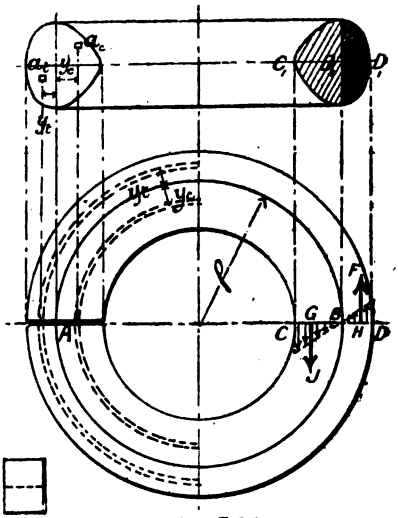

Fig. 383.

The case we have examined is that of a *cantilever* or overhung beam. Fig. 382 shows a supported beam or *girder*, and the bending action is here reversed, the lower fibres being in tension and the upper in compression. Taking a bar of indiarubber, and measuring both before and after bending, it will be found that c is thereby shortened, t lengthened, while n is unaltered; n is therefore termed the *neutral line or axis* of the bar.

Position of Neutral Axis.—The bar in Fig. 383 is bent to an entire circle, and has A B for neutral axis, with fibres B C

Digitized by Google

in compression and B D in tension. The stresses will be zero at B and increase towards C and D as shown, forming a couple, (J or F) × G H, to resist bending, where J = F. Consider two small areas a_t and a_c, and let ρ = radius of curvature at neutral line. Then:

Length before bending $= 2\pi\rho$

Length of ring a_t after bending $= 2\pi(\rho + y_t)$

Length of ring a_c after bending $= 2\pi(\rho - y_c)$

$\therefore$ Strain on fibre $a_t = 2\pi(\rho + y_t) - 2\pi\rho = 2\pi y_t$

and Strain on fibre $a_c = 2\pi\rho - 2\pi(\rho - y_c) = 2\pi y_c$

But $\Delta = \frac{fl}{E}$ generally $\therefore 2\pi y = \frac{f 2\pi\rho}{E}$ and $f = \frac{E y}{\rho}$ ... (1)

$\therefore$ Total stress on a small area $= f a = \frac{E y a}{\rho}$

Total stress on area $B_1 D_1$ = sum of $\frac{E y_t a_t}{\rho}$ for all portions of $B_1 D_1$

and Total stress on area $B_1 C_1$ = sum of $\frac{E y_c a_c}{\rho}$ for all portions of $B_1 C_1$

But these are the forces F and J,

$\therefore \Sigma \frac{E y_t a_t}{\rho} = \Sigma \frac{E y_c a_c}{\rho}$ and as $\frac{E}{\rho}$ is a constant,

$$\Sigma y_t a_t = \Sigma y_c a_c \quad \ldots\ldots\ldots\ldots\ldots\ldots \quad (2)$$

or Moment of tension area = moment of compression area.

But the centre of gravity of a lamina or centre of figure of area is such that the moments on either side are equal. Therefore *the neutral axis of any bar passes through the centre of figure of its cross section.*

Moment of Resistance.—Again, in Fig. 383.

Moment of stress on $a = f a \times y = \frac{E y a}{\rho} \times y$

$\therefore$ Moment of all stresses on a section

$$= \Sigma\left(\frac{E y a}{\rho} \times y\right) = \frac{E}{\rho} \Sigma a y^2$$

But $\Sigma a y^2$ is the moment of inertia (2nd moment) of the section = I

$\therefore$ Moment of resistance $= \frac{E I}{\rho}$ (in terms of ρ) ..... (3)

Digitized by Google

MOMENTS OF INERTIA OF AREA OR 2ND MOMENT (WITH AXIS AS SHOWN).

	For Beams.			For Shafts.		
	Section.	I	y		I	y_1
Rectangle	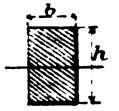	$\frac{b h^3}{12}$	$\frac{h}{2}$	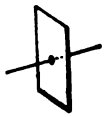	$\frac{b h\,(b^2+h^2)}{12}$	$\frac{\sqrt{b^2+h^2}}{2}$
Square	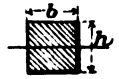	$\frac{b h^3}{12}$	$\frac{h}{2}$		$\frac{s^4}{6}$	$s\sqrt{2}$
Square		$\frac{s^4}{12}$	$\frac{s\sqrt{2}}{2}$			
Hollow Rectangle or Square		$\frac{B H^3 - b h^3}{12}$	$\frac{H}{2}$			
Triangle	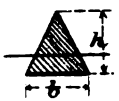	$\frac{b h^3}{36}$	$\frac{2}{3}h$			
Circle	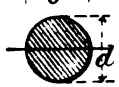	$\frac{\pi d^4}{64}$	$\frac{d}{2}$		$\frac{\pi d^4}{32}$	$\frac{d}{2}$
Hollow Circle		$\frac{\pi}{64}(D^4 - d^4)$	$\frac{D}{2}$		$\frac{\pi\,(D^4 - d^4)}{32}$	$\frac{D}{2}$
Hexagon		$\frac{5\sqrt{3}h^4}{16}$	$\frac{h}{2}$		$\frac{h r^3}{2} + h^3 r$	r
Hexagon	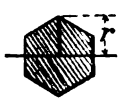		r			

The same general formula holds for shaft moment as for beams,

thus $T_m = f\frac{I}{y}$

Note however the restrictions at *p.* 420.

Digitized by Google

We may also represent the moment in terms of the limiting stress f (sometimes f_c, and sometimes f_t). Then:

Bending moment = moment of resistance

$$B_m = fZ \quad \ldots\ldots\ldots\ldots\ldots\ldots \quad (4)$$

and Z is known as the modulus of section.*

Let y = distance of *furthest* fibre from axis:

By (1) $f = \frac{E y}{\rho}$ by (3) $B_m = \frac{E I}{\rho}$ and by (4) $B_m = fZ$

Then $fZ = \frac{E I}{\rho}$ and $\frac{E y}{\rho} Z = \frac{E I}{\rho}$ $\therefore$ $Z = \frac{I}{y}$ ..... (5)

and $B_m = f\frac{I}{y}$

The value of Z can now be found; thus,

for rectangular sections $fZ = f\frac{b h^3}{12} \div \frac{h}{2} = f\frac{b h^2}{6}$

and for circular sections $fZ = f\frac{\pi d^4}{64} \div \frac{d}{2} = f\frac{\pi d^3}{32}$

Graphic Solution for Moment of Resistance.—Taking, first, a rectangular section (Fig. 384), draw the neutral axis A B. Then C D will be the *line of limiting (or greatest) stress*, and the *value of any horizontal fibre* E F to resist stress will be found by projecting to C D and joining C D to N, thus obtaining the intercept G M. Every fibre being thus treated, the sum of the *virtual stress areas* will be the areas C D N and H J N, which each make one force of the couple when multiplied by the limiting stress f. K and L are the centres of gravity of the areas.

Moment of resistance (generally) = one force × total arm

Moment of rectangular section $= f\left\{\begin{matrix}\text{area C D N} \\ \textit{or}\ \text{H J N}\end{matrix}\right\} \times \text{arm K L}$

$$= f\left(\frac{b h}{4}\right) \times \frac{2}{3} h = f\frac{b h^2}{6}$$

Unsymmetrical sections are treated at Figs. 389, 390 by this method, which can be applied to any section. (*See Appendix II.*)

* Z = virtual area × arm. (See Figs. 384, 385.)

Digitized by Google

To find the Moment of Inertia of any Beam Section.—Proceed as in the last construction and find Z. Then $Z = \frac{I}{y}$ and $I = Z\,y$.* So for rectangular sections

$$I = \frac{b\,h^2}{6} \times \frac{h}{2} = \frac{b\,h^3}{12}$$

Stress areas for *circle*, *hollow circle*, *triangle*, and *hollow rectangle* are shown in Fig. 385, being measured as in Fig. 372 $\left(\text{mean width} \times \frac{h}{2}\right)$. The centre of gravity of each area is obtained by cutting out in stiff paper and hanging up in two different

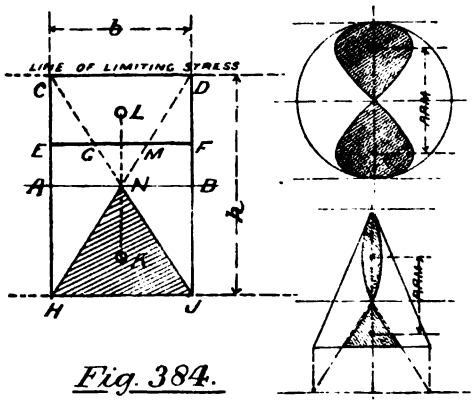

Fig. 384.

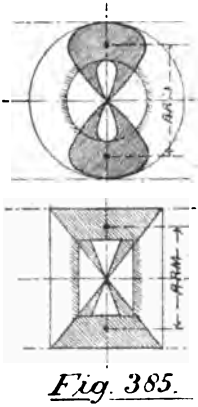

Fig. 385.

positions to mark two plumb lines, which will cross at G. For the triangular beam the neutral axis must be drawn at $\frac{1}{3}$ the height, a line of limiting stress drawn across the apex, and another below, at an equal distance from its axis. Projecting and converging, we shall obtain the areas shown, which *must be equal.* The results are as follows:

Moment of resistance of circle		$= f \cdot 0982\, d^3$
,, ,,	of hollow circle	$= f \cdot 0982 \frac{D^4 - d^4}{D}$
,, ,,	of triangle	$= f \cdot 0417\, b\,h^2$
,, ,,	of hollow rectangle	$= f \cdot 1666 \frac{B\,H^3 - b\,h^3}{H}$

* See also note, page 430.

Digitized by Google

Centre of Gravity of Area by Calculation or Graphics.—Let A B C D (Fig. 386) be the area. Draw any line B C, and perpendicular limiting lines at E and F. Divide B C into 10 parts, and erect perpendiculars *a b c d e f g h j k* at their middle points; also mark point P so that P B = half a division. Then take moments round P thus: (length *a* × 1), (length *b* × 2), (length *c* × 3), &c. Then:

$$\text{addition of moments} = \text{addition of lengths} \times \text{K}$$

$$\text{and} \quad \text{K}\left(\begin{matrix}\text{reckoned in}\\ \text{divisions}\end{matrix}\right) = \frac{\text{added moments}}{\text{added lengths}}$$

Then H G is found, containing the centre of gravity. By turning the figure through about 90°, and repeating the process, L M is also found, and N is the centre of gravity of the whole figure.

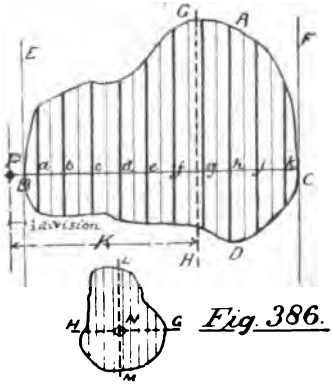

Fig. 386.

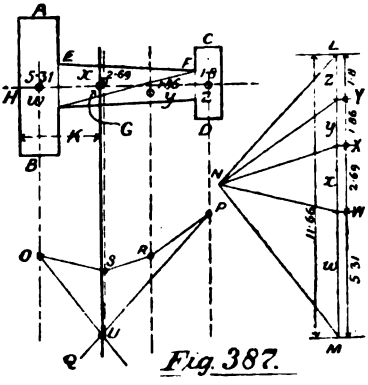

Fig. 387.

The graphic method at Fig. 387 suits some cases better. The area is first divided up and its separate parts calculated. A B = 5·31 : C D = 1·8 : and E F being a trapezium is cut into triangles of 2·69 and 1·86. Next mark centres of each of these areas at *w*, *x*, *y*, and *z*. Set off the weights to scale upon L M, join to any point N, and drop perpendiculars through *w*, *x*, *y*, and *z* of the area. Now commence at any point P in *z* P and draw P Q ‖ L N, P R ‖ Y N, R S ‖ X N, S O ‖ W N, and finally O U ‖ N M, giving U, which, produced upward, cuts the centre line H *z* in G the centre of gravity, and K is then known. (*See Appendix II.*)

Digitized by Google

Economical Sections.—It will be seen in Fig. 384 that half the material is incapable of resistance on account of its location near the axis, being only affected by shear, which however, has usually but a small effect. We are therefore driven to the conclusion that 'solid' beams are uneconomical (seen also in the solid circle and triangle in Fig. 385). The hollow circle and hollow rectangle are an improvement, but the best results are obtained by distributing the material near the line of limiting stress, and thus the well-known H section (Fig. 388) is arrived at for wrought iron, where $f_c = f_t$ approximately, while the modified T section (Fig. 390) is adopted for cast iron where $f_c > f_t$.

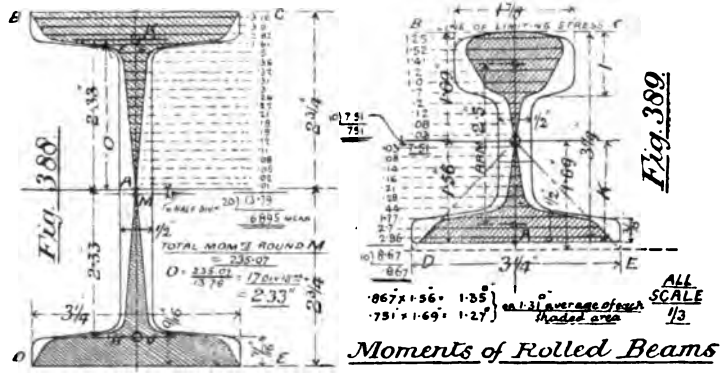

Assuming that the vertical web is for the purpose of resisting shear, we may find the moment of resistance by an

Approximate Method.—The direct strength of the flanges forms a couple whose arm may be taken as the depth from centre to centre of the flanges (the vertical web being neglected). Let a = area of total depth of either flange,

$$\text{Moment of resistance of H section} = f_c a_c h \quad \text{or } f_t a_t h$$

whichever is the lowest value.

In cast iron $\frac{f_t}{f_c} = \frac{1\frac{1}{2}}{4}$ or $\frac{1}{4}$ roughly, and the flanges must have areas in inverse proportion.

Exact graphical solution may also be found, and we will take a few cases.

Digitized by Google

Momental Strength of Wrought Iron Rolled Beam (the section being given at Fig. 388).—Referring every fibre to C B or D E we obtain the shaded stress areas. As these change in contour very abruptly, it is best to divide into 20 parts to find the mean width ·6895. Then ·6895″ × 2·75″ = 1·896 area in sq. ins. The arm may be found by calculation or by hanging up the paper area from two positions, the first method being shown in the diagram, and the result found as 2·33″ on either side. Then z = area × arm, and

$$\underline{\text{Moment of resistance}} = f \times 1{\cdot}896 \times 4{\cdot}66 = f\,8{\cdot}835$$
$$= 4 \times 8{\cdot}835 = \underline{35{\cdot}34 \text{ ton inches}}$$

In such beams $f_t = 5$ tons and $f_c = 4$ tons, so the lowest value has been taken. By the approximate formula,

$$\text{Moment} = f_c a_c h = 4 \times 1{\cdot}625 \times 5 = \underline{32{\cdot}5 \text{ ton inches.}}$$

Momental Strength of Steel Rail (Fig. 389).—By cutting out the section and hanging it, the neutral axis is found at 1·56″ from bottom and 1·69 from top; the limiting line is therefore B C. A second limiting line is drawn at D E, also 1·69 from axis, every fibre now referred to B C or D E, and the stress areas obtained. Cutting these out, their centres can be found, giving the arm 2·5″, and their areas by dividing each into 10 parts vertically. Then (mean width × height) gives ·751″ × 1·69″ = 1·27 for top area, and ·867″ × 1·56″ = 1·35 for bottom area. It is very difficult to get them exactly equal graphically, so the average 1·31 sq. ins. must be taken. Then

$$\underline{\text{Moment of resistance}} = f \times \text{area} \times \text{arm}$$
$$= 6 \times 1{\cdot}31 \times 2{\cdot}5 = \underline{19{\cdot}65 \text{ ton inches.}}$$

Momental Strength of Cast Iron Beam (Fig. 390) —C D A B is the beam section, whose axis is found at E. Draw perpendiculars F G and M N. Set off H G = $1\frac{1}{4}$ and M K = 4, representing f_t and f_c respectively, and draw H J and K L through axis, giving F J as $2\frac{3}{8}$ and L N as $2\frac{1}{8}$. This shows that if f_c be the limiting stress the tension flange would be stressed to $2\frac{1}{8}$ tons, or dangerously; while f_t at $1\frac{1}{4}$ tons would only stress the compression flange at $2\frac{3}{8}$ tons, or safely. f_t is therefore the limiting stress, and A B the limiting line below E, while a corresponding

Digitized by Google

line P Q is drawn at equal distance above E. Then as before, after drawing stress areas:

$$\left.\begin{array}{l}\text{Upper area} = 1{\cdot}256 \times 4{\cdot}56 = 5{\cdot}7 \\ \text{Lower area} = 2{\cdot}102 \times 2{\cdot}44 = 5{\cdot}2\end{array}\right\} = 5{\cdot}45 \text{ average}$$

and $\underline{\text{Moment of resistance}} = f_t \times \text{area} \times \text{arm}$

$$= 1\tfrac{1}{4} \times 5{\cdot}45 \times 5{\cdot}35 = \underline{36{\cdot}45 \text{ ton inches}}$$

or by approximate formula $= 1\tfrac{1}{4} \times 6 \times 5\tfrac{1}{8} = \underline{38{\cdot}4 \text{ ton inches.}}$

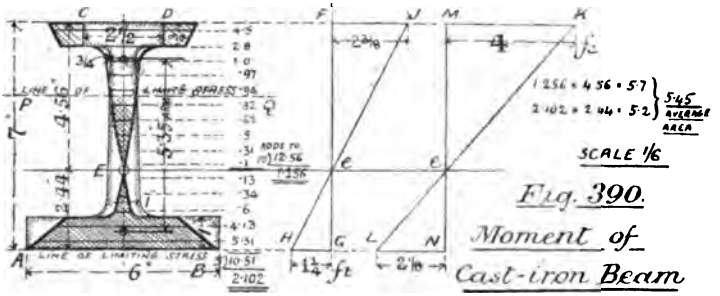

Fig. 390. Moment of Cast-iron Beam

Momental Strength of Plate Girder (Fig. 391).—The rivets must be deducted in tension flange, but they aid the

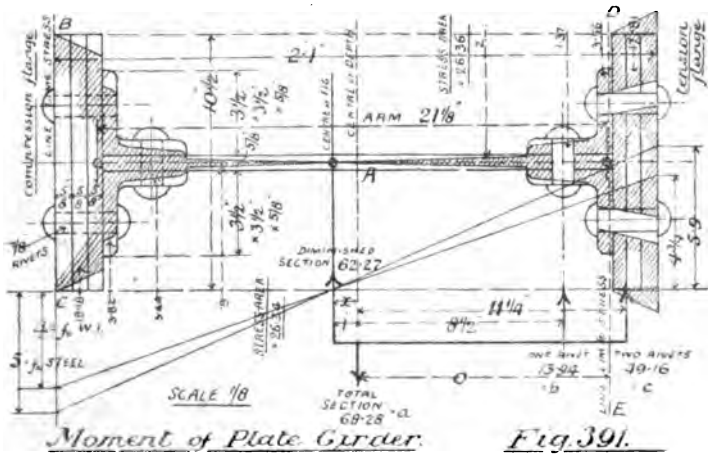

Moment of Plate Girder. *Fig. 391.*

resistance in compression. The centre of figure is then found by taking moments of the parts round A.

Digitized by Google

Moment of diminished section = moment of 1 rivet + moment of 2 rivets

$$\{a-(b+c)\}x = b \times \text{arm} + c \times \text{arm}$$

$$\text{and } x = \frac{(1{\cdot}394 \times 8{\cdot}5)+(49{\cdot}16 \times 11{\cdot}25)}{68{\cdot}28-(13{\cdot}94+49{\cdot}16)} = 1''$$

f_c being limiting stress (see below), B C and D E are reference lines, and the areas are found as before.

Each stress area = 26·35 and arm = 21·12

For W. I. plate girders $f_t = 5$ and $f_c = 4$

For Steel plate girders $f_t = 6$ and $f_c = 5$

The reduced f_c being an allowance for buckling.

$\therefore$ Moment of resistance $= f_c \times$ area $\times$ arm

$= 4 \times 26{\cdot}35 \times 21{\cdot}12 =$ 2226 ton ins. for W. I.

$= 5 \times 26{\cdot}35 \times 21{\cdot}12 =$ 2782 ton ins. for Steel.

Value of f in Beams.—If a 'solid' beam be broken across, the ultimate stress, deduced by applying the momental formula, will be usually found much greater than f_t breaking. If then, the bending theory be pushed as far as the breaking load, we must meet the case by the value

$$f_o = O f_t$$

where f_o is the stress found by transverse experiment and called the *modulus of rupture*, while O we shall call the *bending coefficient*. It varies with the beam section. Thus:

In sections ● or ◆	O is greatest, being about 2
In sections ▮ or ■	O is less, being about 1½
In sections I	O = 1

but depends also on the material, as seen in the following table (compiled from experiment), and is often less than unity for woods.

TABLE OF BENDING COEFFICIENTS (O) FOR SOLID SECTIONS.

Fir	▮ ·52 to ·94	Wrought Iron	▮ 1·6; ● 1·75
Oak	▮ ·7 to 1·0	Forged Steel	▮ 1·47; ● 1·6
Pitch Pine	▮ ·8 to 2·2	Gun Metal	▮ 1·0; ● 1·9
Cast Iron	▮ 2; ● 2·35;	I	$1+\frac{b}{a}$ where a = flange width and b = web thickness

And our beam formula becomes $B_m = O f Z$

Digitized by Google

In all cases of compound stress there appear to be points of difference between practice and the theories adopted. Thus a complete theory of bending ought to simultaneously consider tension, compression, vertical shear, and horizontal shear, while the bending theory treated on p. 428 deals only with the moment of the direct stresses; hence we should not be surprised to find the differences referred to. Some writers show that longitudinal shear is exceedingly small as compared with the effect of direct stress

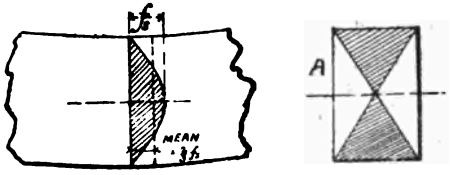

Fig. 393.

(as also is vertical shear, in beams where the ratio of length to breadth is considerable). Others, again, assert they have found theory and practice agree perfectly within the elastic limit of truly elastic material. Without doubt the greatest portion of the discrepancy is due to the attempt to use the beam formula during the plastic stage, for which it was never constructed. Neither can it be correct to proportion beams by using a factor on the modulus of rupture, the method largely adopted up to say 1875 or 1880. Probably a somewhat higher value of f may be used than f_t (but not so high a one as f_o), upon which to use the safety factor in the case of solid beams; while thin built-up sections may be proportioned by putting the safe f_t in the usual formula. The greatest difference between f_t and f_o occurs, as we should expect, with materials that have no true elastic stage, or, what is the same thing, with such as have a constantly varying value for E. Among these may be mentioned cast iron, india-rubber, and some woods (*see also p.* 453).

We have now completed our investigations of moment of resistance, and shall proceed to consider the left side of the bending equation.

Bending Moment and Vertical Shear.—In long beams the shear is small in comparison with bending stress, and is fully met by the surplus section. For the distribution of shear stress

Digitized by Google

may be shown to be parabolic, as at f_s (Fig. 393), or greatest near the axis, while on the contrary the greatest bending stress is furthest from the axis, as shown at A.

$$\tfrac{2}{3} f_s \times \text{area of section} = \text{total shear}$$

$$\text{and } f_s = \tfrac{3}{2} \frac{\text{total shear load on section}}{\text{area of section}}$$

In very short beams this stress should be considered, till finally, in rivets and pins, the shear is almost pure. We will now examine the distribution of Bending Moment and Shear Load under various conditions of support and load. (*See App. III.*)

I. *Cantilever with Concentrated Load* * (Fig. 394).—A B is the beam and W the load, the latter having a leverage over

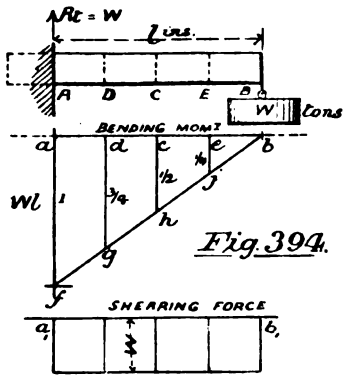

Fig. 394.

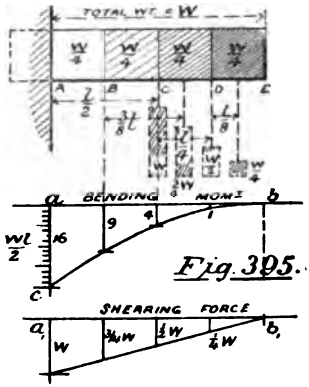

Fig. 395.

section A of $W \times l$ ton feet: at section D of $W \times \frac{3}{4} l$, and so on. The *Bending Moments* at various sections may therefore be represented on the base line *a b* by *downward* ordinates, thus:

$$\text{At A} = W l \times 1 \qquad \text{at D} = W l \times \tfrac{3}{4}$$
$$\text{At C} = W l \times \tfrac{1}{2} \qquad \text{at E} = W l \times \tfrac{1}{4}$$

and at B = nothing; and these ordinates are shown at *f, g, h, j,* and *b*.

The *Shearing Force* is caused by the reciprocal action of W and R_t, and will equal W upon any section between A and B. For regularity we shall always consider the force *on the right side of*

* Weight of beam is not taken unless stated.

Digitized by Google

the section only, so here the shear ordinates are drawn *downward* on the line *a b*, and equal W in every case.

II. *Cantilever with Uniformly Distributed Load* (Fig. 395), the load being represented by the weight of the beam. Considering the beam hinged successively at A, B, C, D, and E, the loads on the right may be successively concentrated at their middle points, and the *Bending Moments* become:

$$\text{At A} = \text{W} \times \frac{l}{2} = \text{W}\,l \times \frac{1}{2} \quad \propto 16 = 4^2$$

$$\text{At B} = \frac{3}{4}\text{W} \times \frac{3}{8}l = \text{W}\,l \times \frac{9}{32} \quad \propto 9 = 3^2$$

$$\text{At C} = \frac{\text{W}}{2} \times \frac{l}{4} = \text{W}\,l \times \frac{1}{8} \quad \propto 4 = 2^2$$

$$\text{At D} = \frac{\text{W}}{4} \times \frac{l}{8} = \text{W}\,l \times \frac{1}{32} \quad \propto 1 = 1^2$$

and at E = nothing, as shown by diagram, and as the ordinates vary as the square of the abscissæ at *a b*, the curve is a parabola with *b* as vertex.

Shearing Force on right of section A = W, at section B = $\frac{3}{4}$ W, and at C D and E, $\frac{\text{W}}{2}$, $\frac{\text{W}}{4}$, and nothing respectively, as shown by diagram on $a_1 b_1$.

III. *Girder with concentrated load at centre and ends merely supported* (Fig. 396).—Reactions will each equal $\frac{\text{W}}{2}$, which we shall use in estimating the moment. R_{t_1} balances R_{t_2} round W as a pivot, and the stress at E is due to *one or the other*, but not to both. Then calling each reaction $\frac{\text{W}}{2}$ the *Bending Moments* will be:

$$\text{At B} = \frac{\text{W}}{2} \times \frac{l}{8} = \text{W}\,l \times \frac{1}{16} \quad \propto 1$$

$$\text{At C} = \frac{\text{W}}{2} \times \frac{l}{4} = \text{W}\,l \times \frac{1}{8} \quad \propto 2$$

$$\text{At D} = \frac{\text{W}}{2} \times \frac{3}{8}l = \text{W}\,l \times \frac{3}{16} \quad \propto 3$$

$$\text{At E} = \frac{\text{W}}{2} \times \frac{l}{2} = \text{W}\,l \times \frac{1}{4} \quad \propto 4$$

and similarly between J and E.

Digitized by Google

The *Shearing Force* is found by a deduction of weight and reaction. Considering always the right side of section, the force is constant from A to E, and is that part of W which balances R_{t_1} or $\frac{W}{2}$ downwards. From E to J it is a constant equal to R_{t_2} upward. At c_1 the forces change suddenly from + to −. If the weight be hung as at M N there is no shear stress between M and N, but if the link K L be adopted the shear stress is $\frac{W}{2}$ right up to the centre line on either side.

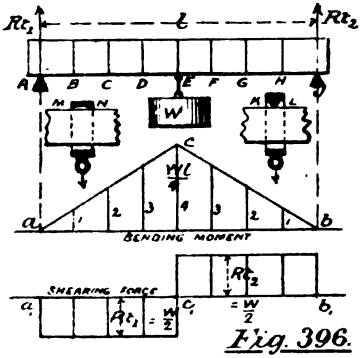

Fig. 396.

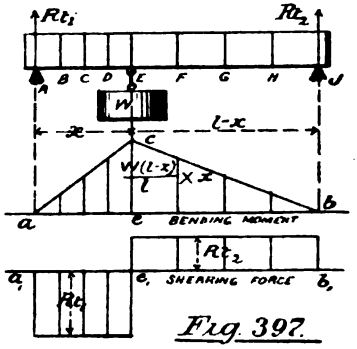

Fig. 397.

IV. *Girder with concentrated load at any point.*—Taking moments round J, we have

$$R_t \times l = W\,(l-x) \quad \text{and } R_t = \frac{W\,(l-x)}{l}$$

∴ *Bending Moment* at $E = \frac{W(l-x)}{l}\,x$, and the rest of the diagram is made up of straight lines *a c*, *c b*, as in the last case. The *Shearing Force* is found from the reactions as before.

V. *Girder supported at ends and loaded uniformly* (Fig. 398), the weight of the beam representing the load. Reaction $= \frac{W}{2}$ in each case. The *Bending Moments* are the subtraction of the weight moment and reaction moment at every 'hinge,' as shown diagrammatically:

Digitized by Google

$$\text{At B} = \left(\frac{W}{2} \times \frac{l}{8}\right) - \left(\frac{W}{8} \times \frac{l}{16}\right) = W l \times \frac{7}{128} \quad \propto \quad 7$$

$$\text{At C} = \left(\frac{W}{2} \times \frac{l}{4}\right) - \left(\frac{W}{4} \times \frac{l}{8}\right) = W l \times \frac{3}{32} \quad \propto \quad 12$$

$$\text{At D} = \left(\frac{W}{2} \times \frac{3}{8} l\right) - \left(\frac{3}{8} W \times \frac{3}{16} l\right) = W l \times \frac{15}{128} \quad \propto \quad 15$$

$$\text{At E} = \left(\frac{W}{2} \times \frac{l}{2}\right) - \left(\frac{W}{2} \times \frac{l}{4}\right) = W l \times \frac{1}{8} \quad \propto \quad 16$$

and are similarly found between H and E, all being shown on base *a b*. Drawing *f k* horizontally, the intercepts between *k f* and *a f* are seen to vary as in Fig. 395, and the curve is therefore a parabola with vertex at *f*.

The *Shearing Force* is found by deducting upward and downward forces on the right of each section. Thus:

$$\text{At A} = W - \frac{W}{2} = W \times \frac{1}{2} \quad \propto \quad 4$$

$$\text{At B} = \frac{7}{8} W - \frac{W}{2} = W \times \frac{3}{8} \quad \propto \quad 3$$

$$\text{At C} = \frac{3}{4} W - \frac{W}{2} = W \times \frac{1}{4} \quad \propto \quad 2$$

$$\text{At D} = \frac{5}{8} W - \frac{W}{2} = W \times \frac{1}{8} \quad \propto \quad 1$$

$$\text{At E} = \frac{W}{2} - \frac{W}{2} = 0 \quad \propto \quad 0$$

$$\text{At F} = \frac{3}{8} W - \frac{W}{2} = -W \times \frac{1}{8} \quad \propto \quad -1$$

$$\text{At G} = \frac{W}{4} - \frac{W}{2} = -W \times \frac{1}{4} \quad \propto \quad -2$$

$$\text{At H} = \frac{W}{8} - \frac{W}{2} = -W \times \frac{3}{8} \quad \propto \quad -3$$

$$\text{At J} = -\frac{W}{2} = -W \times \frac{1}{2} \quad \propto \quad -4$$

There is no force whatever at the centre.

VI. *Beam fixed at both ends and loaded in the centre* (Fig. 399), weight of beam neglected. The beam will be deflected to the dotted shape, A C and G J acting as cantilevers, and C G as a supported girder. From C to G the B_m is upward, and from

Digitized by Google

A to C and G to J downward, being zero at C and G, the points of contra-flexure, in this case at $\frac{1}{4}l$ from the ends. The *Bending Moments* are

$$\text{At E} = \left(\frac{W l}{4}\right) \text{generally} = \frac{\frac{W l}{2}}{4} = W l \times \frac{1}{8} \text{ upward}$$

$$\text{At A and J} = (W l) \text{ generally} = \frac{W}{2} \times \frac{l}{4} = W l \times \frac{1}{8} \text{ downward}$$

and the diagram is given on base *a b*.

Shearing Force is the same as Case III. (*See Appendix II.*)

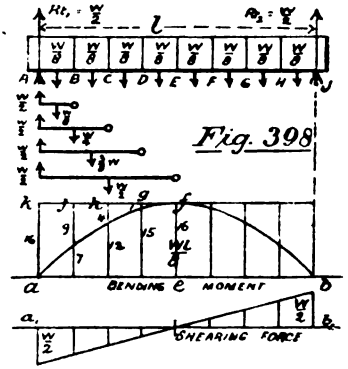

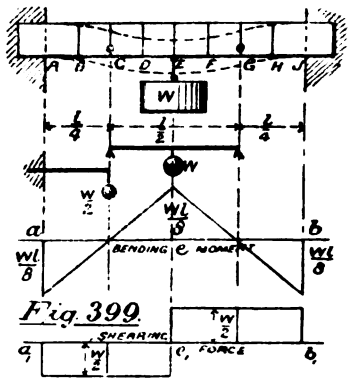

VII. *Beam fixed at both ends and loaded uniformly by its own weight* (Fig. 400).—The points of contra-flexure, C and G, can be proved to be ·211 *l* from either end. Then *Bending Moment*

$$\text{at E} = \left(\frac{W l}{8}\right) \text{generally} = \frac{\cdot 578\, W \times \cdot 578\, l}{8} = \cdot 04176\, W l \text{ or } \frac{1}{24} W l$$

and C G is a parabola drawn upwards.

The moments on A C are composed thus:

For concentrated load ·289 W; $B_m = \cdot 289\, W \times \cdot 211\, l = \cdot 06098\, W l$

and for uniform load ·211 W; $B_m = \frac{\cdot 211\, W \times \cdot 211\, l}{2} = \cdot 02226\, W l$

These added give ·083 W *l* or $\frac{W l}{12}$

Drawing *n c* on base *a c* and the parabola *k c* on base *n c* (see

Digitized by Google

Case II.), it will be found that the total ordinates under $p\,q$ vary as the square of their distance from q, proving that $k\,q\,l_1$ is a continuous parabola.

The *Shearing Force* at A consists of

$$\cdot289\,W + \cdot211\,W = \frac{W}{2} \quad \text{and at C} = \cdot289\,W$$

and the diagram is a straight line. (*See Appendix II.*)

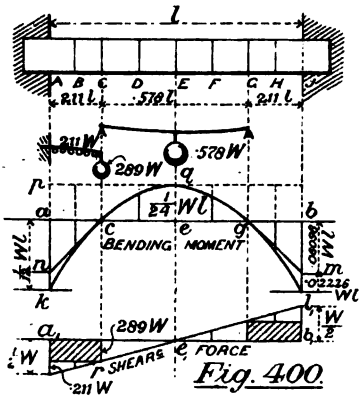

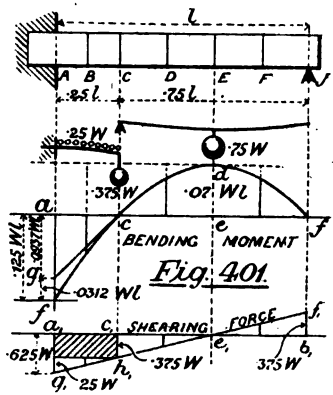

VIII. *Beam fixed at one end, supported at the other, and loaded by its own weight* (Fig. 401).—This case may be deduced from the first figure on p. 850, and the point of contra-flexure is $\cdot25\,l$ from A and $\cdot75\,l$ from J. *Bending Moment*

$$\text{At E} = \left(\frac{W\,l}{8}\right) \text{generally} = \frac{\cdot75\,W \times \cdot75\,l}{8} = \cdot07\,W\,l$$

$$\left.\begin{aligned} &\text{At } ag = \cdot375\,W \times \cdot25\,l = \cdot0937\,W\,l \\ \text{and} \quad &\text{At } gf = \frac{\cdot25\,W \times \cdot25\,l}{2} = \cdot0312\,W\,l \end{aligned}\right\} = \cdot125\,W\,l$$

Shearing Force at A $= a_1\,d_1 + d_1\,g_1 = \cdot625$ W, and at J $= b_1\,f_1 = \cdot375$ W. The curves will be found continuous in both diagrams.

Combination Diagrams are shown in Fig. 402 based on cases already discussed. The final shaded areas, B_f and S_f, are found

Digitized by Google

by superposing the results due to the separate loads, having regard to the signs + and −. The cases are as follows:

(1.) One distributed and two concentrated loads on cantilever.
(2.) One concentrated and one distributed load on girder.
(3.) Maximum diagram for rolling load.
(4.) Three concentrated loads and one distributed load on girder.

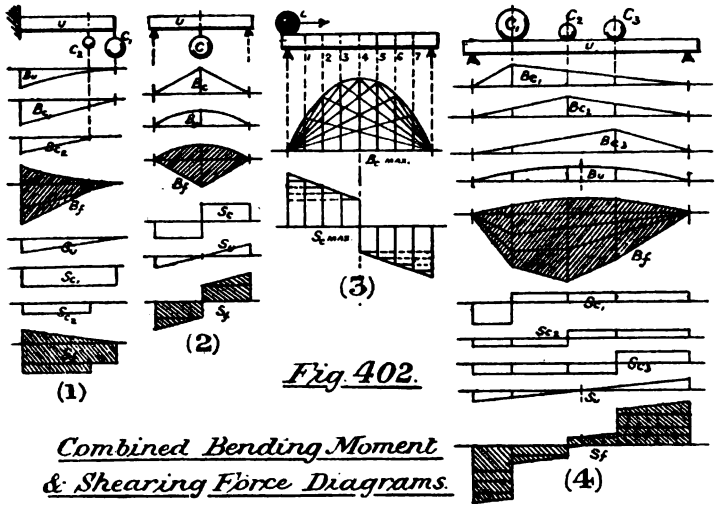

Fig. 402.

Combined Bending Moment & Shearing Force Diagrams.

The distributed load is more conveniently placed on one side of the base line, and the concentrated loads on the other side, in the superposed diagram. All are well lettered to show the relation between diagram and load. In Case (3) the load must be placed over the successive numbers, and diagrams obtained for every position, as in Fig. 397, then the bounding curve will be the maximum, and the final maximum B_m curve will be a parabola.

Fig. 403 shows a continuous beam on three supports, loaded by equal concentrated loads, W_1 and W_1, and uniformly by its own weight, W + W. The contra-flexure points are practically the same for each case, and the diagrams can be obtained from previous considerations. The following table is very useful for continuous beams:—

Digitized by Google

TABLE OF REACTIONS ON SUPPORTS FOR CONTINUOUS BEAMS, AS FOUND FROM CLAPEYRON'S 'THEOREM OF THREE MOMENTS' IN TERMS OF W_1 THE UNIFORM LOAD ON EACH SPAN.

2 Spans	$\frac{3}{8}$	$\frac{10}{8}$	$\frac{3}{8}$							
3 Spans	$\frac{4}{10}$	$\frac{11}{10}$	$\frac{11}{10}$	$\frac{4}{10}$						
4 Spans	$\frac{11}{28}$	$\frac{32}{28}$	$\frac{26}{28}$	$\frac{32}{28}$	$\frac{11}{28}$					
5 Spans	$\frac{15}{38}$	$\frac{43}{38}$	$\frac{37}{38}$	$\frac{37}{38}$	$\frac{43}{38}$	$\frac{15}{38}$				
6 Spans	$\frac{41}{104}$	$\frac{118}{104}$	$\frac{108}{104}$	$\frac{106}{104}$	$\frac{108}{104}$	$\frac{118}{104}$	$\frac{41}{104}$			
7 Spans	$\frac{56}{142}$	$\frac{161}{142}$	$\frac{137}{142}$	$\frac{143}{142}$	$\frac{143}{142}$	$\frac{137}{142}$	$\frac{161}{142}$	$\frac{56}{142}$		
8 Spans	$\frac{152}{388}$	$\frac{440}{388}$	$\frac{374}{388}$	$\frac{392}{388}$	$\frac{386}{388}$	$\frac{392}{388}$	$\frac{374}{388}$	$\frac{440}{388}$	$\frac{152}{388}$	
9 Spans	$\frac{209}{530}$	$\frac{601}{530}$	$\frac{511}{530}$	$\frac{535}{530}$	$\frac{529}{530}$	$\frac{529}{530}$	$\frac{535}{530}$	$\frac{511}{530}$	$\frac{601}{530}$	$\frac{209}{530}$

(*See also Appendices I. and II.*)

Culmann's Funicular Polygon (Fig. 404) is a ready means of solving such a problem as (4) Fig. 402. Culmann of Zurich proved that the bending moments are there proportional to the ordinates of a polygon obtained by hanging the same weights to a loose string hooked at the supports. Taking the loads in Fig. 404, B C is drawn to scale, and represents the weights taken in order shown. Mark a point E any distance x ft. from C B, and join to C, M, N, and B. Draw from any point F, F G ‖ C E, G H ‖ M E, H J ‖ N E, and J K ‖ B E. Join K F, and draw E L ‖ K F. The shaded polygon is the curve of *Bending Moment*, and

$$B_m = \text{vertical ordinate in lbs.} \times x' \text{ (lb. ft.)}$$

Digitized by Google

Project S T from L, U V from C, W X from M, Y Z from N, and *a b* from B, and the curve of *Shearing Force* is obtained, measureable by load scale. Also S *a* = R_{t_1}, and T V = R_{t_2}. (*See App. II.*)

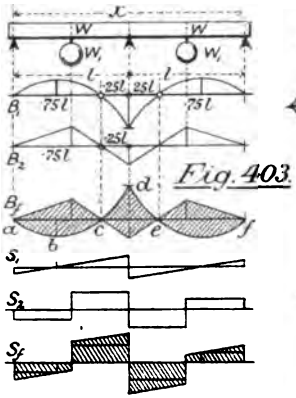

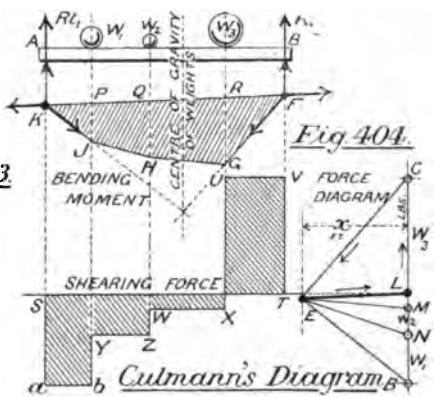

A Parabola may be drawn by the method in Fig. 405, which consists in dividing A B and B C into an equal number of parts, and joining the divisions of A B to D by lines cutting the divisions of B C, then tracing the curve through the crossing points.

We will now take some examples to illustrate the equation of B_m to fZ. The shear diagram is not often required in practice, but should at least be made for trial in short beams.

Example 22.—The following beams are proposed for a central load and given span: (1) a bar 4″ deep by 2″ wide; (2) a bar 3·8″ dia; (3) a bar 3·5″ square. What are their relative strengths? (Eng. Exam. 1885.)

$$B_m = fZ \quad \text{or} \quad \frac{W\,l}{4} = fZ \qquad \therefore W \propto Z$$

(1) $$Z = \frac{b\,h^2}{6} = \frac{2 \times 16}{6} = 5{\cdot}33 \propto 1$$

(2) $$Z = \frac{\pi\,d^3}{32} = \frac{22 \times 3{\cdot}8 \times 3{\cdot}8 \times 3{\cdot}8}{7 \times 32} = 5{\cdot}388 \propto 1{\cdot}01$$

(3) $$Z = \frac{s^3}{6} = \frac{3{\cdot}5 \times 3{\cdot}5 \times 3{\cdot}5}{6} = 7{\cdot}145 \propto 1{\cdot}34$$

Digitized by Google

Example 23.—(1) A beam 2′ long × 1″ square is broken by 250 lbs. at the centre. (2) Find the breaking load for a beam 15 ft. long, 10″ deep, and 6″ wide, with the load 2 ft. from one end. (Eng. Exam. 1886.)

For (1) (keeping l in feet and bh in ins.)

$$\therefore \frac{Wl}{4} = f\frac{bh^2}{6} \quad \therefore f = \frac{Wl6}{4bh^2} = \frac{250 \times 2 \times 6}{4 \times 1 \times 1} = 750$$

For (2) by Case IV., Fig. 397

$$B_m = \frac{W(l-x)}{l} \quad x = \frac{W\,8 \times 2}{10} = \frac{8}{5}W$$

$$\therefore \frac{8}{5}W = f\frac{bh^2}{6} \quad \text{and} \quad \underline{W} = f\frac{bh^2 \times 5}{6 \times 8} = \frac{750 \times 6 \times 100 \times 5}{6 \times 8}$$

$$= 46875 \text{ lbs.} = \underline{20{\cdot}9 \text{ tons.}}$$

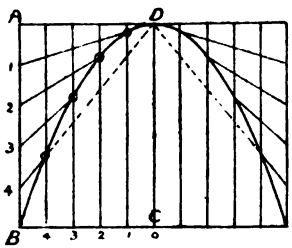

Fig. 405.

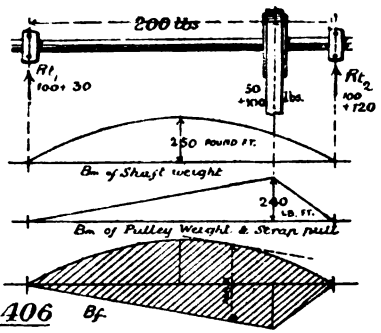

Fig 406 Bf

Example 24.—A shaft pulley is 8′ from one bearing, and 2′ from the other. Weight of shaft = 200 lbs. Weight of pulley = 50 lbs. Total belt tension (downwards) = 100 lbs. Draw bending moment diagram and find loads on bearings. (Eng. Exam. 1888.)

$$\underline{B_m \text{ of shaft weight}} = \frac{Wl}{8} = \frac{200 \times 10}{8} = \underline{250 \text{ lb. ft.}}$$

$$\text{Reactions due to pulley and strap} = \frac{2}{10} \times 150 = 30 \text{ lbs.}$$

$$\text{and } \frac{8}{10} \times 150 = 120 \text{ lbs.}$$

$$\therefore \underline{B_m \text{ due to pulley weight and strap pull}} = 30 \times 8 \text{ or } 120 \times 2 = \underline{240 \text{ lb. ft.}}$$

$$\underline{R_{t1}} = 100 + 30 = \underline{130 \text{ lbs.}}$$

$$\underline{R_{t2}} = 100 + 120 = \underline{220 \text{ lbs.}}$$

And the diagrams are shown at Fig. 406, B_f being the combined figure.

Digitized by Google

Example 25.—Find the safe concentrated load in the following cases by the approximate formula.

(1) *Wrought Iron Plate Girder.*—Each flange, 10″ × ½″; angles, 3½″ × 3½″ × ½″; total depth, 3 ft.; span, 28 ft.; f_t or $f_c = 5$ tons. Allow for ¾″ rivets.

(2) *Wrought Iron Rolled Cantilever*, H Section.—Each flange, 4½″ × ⅝″; depth, 8″; overhang, 8 ft.; f_t or $f_c = 5$ tons.

(3) *Cast Iron Girder.*—One flange, 3″ × 1½″; one flange, 9″ × 1½″; depth, 12″; span, 20 feet.

(All from Eng. Exam. 1891 and 1892.)

(1) $W = \frac{4fah}{l} = \frac{4 \times 5 \times (8\frac{1}{2} \times \frac{1}{2} + 12\frac{3}{4} \times \frac{1}{2}) \times 35}{28 \times 12} = \underline{22{\cdot}13 \text{ tons}}$

(2) $W = \frac{fah}{l} = \frac{5 \times 4\frac{1}{2} \times \frac{5}{8} \times 7\frac{3}{8}}{8 \times 12} = \underline{1{\cdot}08 \text{ tons}}$

(3) $f_c a_c = 3 \times 1\frac{1}{2} \times 4 = 18$ tons; and $f_t a_t = 9 \times 1\frac{1}{2} \times 1\frac{1}{4} = 17$ tons

$$\therefore \quad W = \frac{4 \times 17\, h}{l} = \frac{4 \times 17 \times 10\frac{1}{2}}{20 \times 12} \text{ tons} = \underline{2{\cdot}97 \text{ tons.}}$$

Example 26.—Find the depth of an engine guide bar 10″ wide and 4 ft. span. Total piston pressure = 25 tons; length of connecting rod = twice stroke; and greatest obliquity supposed to occur with guide block at centre of span. $f_o = 5$ tons.

(Hons. Mach. Constr. Ex. 1892.)

Draw crank and rod to scale, Fig. 407. Then the forces are as at A, and the triangle of forces is drawn parallel, as at D.

But $\frac{E}{D} = \frac{\text{press. on bars}}{\text{piston press.}}$ and press. on bars $= \frac{1 \times 25}{4} = 6{\cdot}25$ tons

Then $\frac{Wl}{4} = f_o \frac{bh^2}{6}$ and $\underline{h} = \sqrt{\frac{Wl \times 6}{4 \times b f_o}} = \sqrt{\frac{6{\cdot}25 \times 4 \times 12 \times 6}{4 \times 10 \times 5}} = \underline{3''}$

Example 27.—The girder stays of a combustion chamber are 21′ span, and are spaced 8¼″ centres apart (see Figs. 311 and 312), the section being rectangular, 5½″ deep by 1⅝″ wide. There are two bolts to each stay, 7″ apart (Fig. 408). Find the greatest stress in the stay when steam pressure = 225 lbs. per sq. in. (Hons. Mach. Constr. Ex. 1891.)

The roof plate is equivalent to a continuous girder over three spans, as at p. 445, so the pull on each bolt would apparently be $\frac{1}{10}$ W. But the plate is continuous transversely also. Therefore

Digitized by Google

Each bolt supports $\frac{11}{10}$ of $\frac{11}{10}$ W = 1·21 W
= 1·21 × 7 × 8¼ × 225 lbs. = 7 tons.

Max. B_m at B_1 or $B_2 = R_t \times 7'' = \frac{2}{3} \times 7 \times 7 = 32\frac{2}{3}$ ton ins.

and Max. B_m at $B_f = 32\frac{2}{3} + \frac{32\frac{2}{3}}{2} = 49$ ton ins.

$B_m = f\frac{bh^2}{6}$ and $f = \frac{49 \times 6}{1\frac{5}{8} \times 5\frac{1}{2} \times 5\frac{1}{2}} = 6$ tons per sq. in.

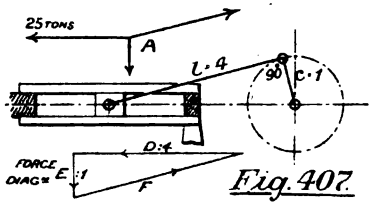

Fig. 407

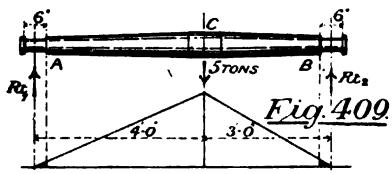

Fig. 409

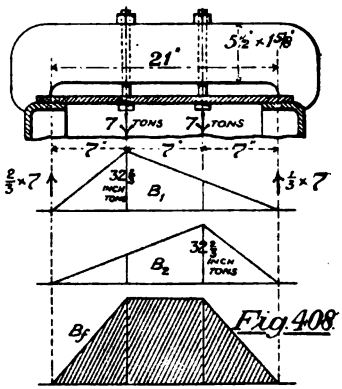

Fig. 408

Example 28.—An axle is loaded as in Fig. 409, with 5 tons at C. Find greatest B_m; B_m tending to fracture each journal; and deduce the diameters at these places, taking $f_o = 5$ tons. (Hons. Mach. Constr. Ex. 1879.)

$R_{t1} = \frac{3}{7} \times 5 = 2{\cdot}14$ tons $\quad R_{t2} = \frac{4}{7} \times 5 = 2{\cdot}85$ tons

B_m at C $= 2{\cdot}14 \times 4 \times 12 = 102{\cdot}72$ ton inches

$\therefore$ B_m at A $= \frac{3}{48} \times 102{\cdot}72 = 6{\cdot}42$ ton inches

B_m at B $= \frac{3}{36} \times 102{\cdot}72 = 8{\cdot}56$ ton inches

$B_m = f_o \frac{\pi d^3}{32}$ and $d = \sqrt[3]{\frac{B_m 32}{f_o \pi}}$ $\therefore$ d (at B) $= \sqrt[3]{\frac{8{\cdot}56 \times 32 \times 7}{5 \times 22}} = 2{\cdot}6''$

and d (at A) $= \sqrt[3]{\frac{6{\cdot}42 \times 32 \times 7}{5 \times 22}} = 2{\cdot}35''$

Now in circular beams $\frac{4}{10}$ area goes for bending, and $\frac{6}{10}$ goes for shear (see Fig. 385).

Digitized by Google

Total shear at A $= f_s \times$ area left for shear

$$\therefore \quad 2{\cdot}14 = f_s \times {\cdot}6 \times 12{\cdot}6$$

$$\text{Average } f_s = \frac{2{\cdot}14}{{\cdot}6 \times 4{\cdot}33} = {\cdot}823 \text{ ton, and by p. 438 max. } f_s =$$

$$\frac{3}{2} \times {\cdot}823 = 1{\cdot}234 \text{ ton}$$

Similarly, max. f_s at B = 1·344 ton, so both journals are safe for shear.

Finally, $\underline{d \text{ (at C)}} = \sqrt[3]{\frac{102{\cdot}72 \times 32 \times 7}{5 \times 22}} = \underline{5{\cdot}94'}$

Deflection of Beams.—Take a supported girder, as in

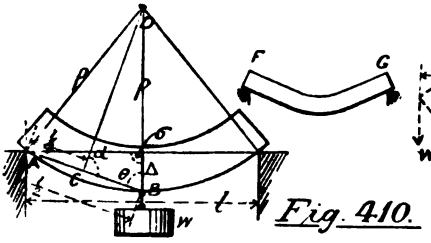

Fig. 410.

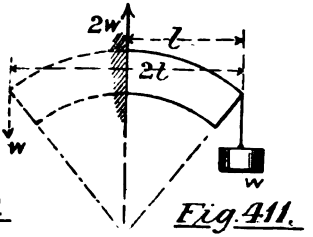

Fig. 411.

Fig. 410, of uniform section, and imagine it deflected into an arc of radius ρ. Bisect A B at C. Then D C B is similar to A σ B, because θ is common, while σ and α are right angles. If Δ is small,

$$\rho : \frac{l}{4} :: \frac{l}{2} : \Delta \quad \text{and} \quad \Delta = \frac{l^2}{8\rho}$$

$$\text{But } B_m = \frac{EI}{\rho} \quad \text{and} \quad \rho = \frac{EI}{B_m}$$

$$\therefore \quad \Delta = \frac{l^2 B_m}{8EI} = \frac{wl}{4} \times \frac{l^2}{8EI} = \frac{wl^3}{32EI}$$

In reality the arc would not be circular but similar to F G, and its deflection would be less; then,

$\underline{\Delta = \frac{wl^3}{48EI}}$ for a girder of uniform section, with central load,

and this will hold if the elastic limit be not exceeded.

Taking two cantilevers back to back, as in Fig. 411, we must substitute for w and l in the above formula $2w$ and $2l$ respectively; then,

$$\left.\begin{matrix}\text{For cantilever with} \\ \text{concentrated load}\end{matrix}\right\} \quad \underline{\Delta} = \frac{2w \times (2l)^3}{48EI} = 16 \times \underline{\frac{wl^3}{48EI}}$$

Digitized by Google

DEFLECTION FOR UNIFORM BEAMS, WHEN $Y = \frac{w l^3}{48 E I}$.

Cantilever with concentrated load	16 Y
Cantilever with distributed load	6 Y
Girder with concentrated load	1 Y
Girder with distributed load	$\frac{5}{8}$ Y
Fixed beam with concentrated load	$\frac{1}{5}$ Y
Fixed beam with distributed load	$\frac{1}{8}$ Y
Beam supported one end, fixed at other, central load	$\frac{4}{9}$ Y
Beam supported one end, fixed at other, distributed load	$\frac{4}{15}$ Y

$$\therefore \quad \Delta \propto \frac{w l^3}{b h^3} \quad \text{and stiffness} \propto \frac{b h^3}{l^3}$$

and the practicable allowable deflection is, for cantilevers $\frac{1}{80}''$, and for girders $\frac{1}{40}''$ per ft. of span. (*See Appendix II.*)

The **Resilience of a Beam** is equal to half the proof or elastic load multiplied by the corresponding deflection (see p. 367). For a girder with central load,

$$\Delta = \frac{w l^3}{48 E I} \qquad w = \frac{4 f^{\text{lbs}} b h^2}{6 l} \qquad \text{and } I = \frac{b h^3}{12}$$

$$\therefore \underline{\text{Resilience} = \frac{w}{2} \times \Delta = \frac{w}{2} \times \frac{w l^3}{48 E I} = \frac{16 f^{2\,\text{lbs}} b^2 h^2 l^3 12}{36 l^2 96 E b h^3} = \frac{f^{\text{lbs}} b h l}{18 E}} \quad \text{and} \propto b h l$$

The Strength of Flat Surfaces in Boilers is best calculated by the Board of Trade empirical rule.

$$\text{Safe steam pressure } p = \frac{C(t+1)^2}{s-6}$$

where s = surface supported by one stay, in sq. ins.
t = plate thickness.

$$C = \begin{cases} 100 \text{ when stays have nuts and large washers.} \\ 60 \text{ ditto, but exposed to flame.} \\ 36 \text{ stays riveted over and exposed to flame.} \end{cases}$$

Digitized by Google

Beams of Uniform Strength.—If rectangular beams be proportioned to their bending moment at every section, the depth or width will vary as follows, easily proved by equation :—

With constant breadth	Case I.	Depth	$\propto$ parabola.	
	„ II.	„	$\propto$ triangle.	
	„ III., IV.	„	$\propto$ two parabolas.	
	„ V.	„	$\propto$ semi-ellipse.	
With constant depth	Case I.	Breadth	$\propto$ triangle.	
	„ II.	„	$\propto$ 2 convex parabolas.	
	„ III., IV.	„	$\propto$ 2 triangles.	
	„ V.	„	$\propto$ 2 concave parabolas.	

Example 29.—A beam of oak, supported at the ends, 2′ long, 2″ broad, 2″ deep, supports 400 lbs. safely, at the centre, and its deflection is ·06′. Find safe load at centre, and deflection of a beam of oak 16′ long, 9″ broad, 14″ deep, (1) with ends supported ; (2) with ends fixed. (Eng. Exam. 1882.)

Taking l in feet and bh in ins. $W \propto \frac{bh^2}{l}$ and $\Delta \propto \frac{W l^3}{bh^3}$

Sample beam, $W \propto \frac{2 \times 2^2}{2} = 4$ $\quad \Delta \propto \frac{400 \times 8}{2 \times 8} = 200$

New beam, $W_1 \propto \frac{9 \times 14 \times 14}{16} = 110{\cdot}2$

(1) Supported ; $W : W_1 :: 4 : 110{\cdot}2$ and $W_1 = \frac{400 \times 110{\cdot}2}{4} = 11{,}020$ lbs.

$\Delta_1 \propto \frac{11{,}020 \times 4096}{9 \times 2744} = 25{,}600$ $\quad \therefore \Delta : \Delta_1 :: 200 : 1828$ and $\Delta_1 = \frac{1828 \times {\cdot}06}{200} = {\cdot}548''$

(2) Fixed; $B_m(1) : B_m(2) :: \frac{Wl}{4} : \frac{Wl}{8}$ $\quad$ and $\Delta_2 = \frac{1}{5}\Delta_1$

$\therefore W_2 = 11{,}020 \times 2 = 22{,}040$ lbs. $\quad \therefore \Delta_2 = \frac{{\cdot}548}{5} = {\cdot}109''$

Example 30.—A beam of uniform section is supported at the ends and loaded centrally. Find the ratio of depth to span that the deflection may not exceed $\frac{1}{1000}$ of span when $f = 8000$ lbs. and $E = 28{,}000{,}000$. (Hons. Mach. Constr. Ex. 1887.)

Digitized by Google

$$\Delta = \frac{w l^3}{48 \, E \, I} \quad \text{and as} \quad \frac{w l}{4} = f^{\text{lbs}} \frac{2 \, I}{h}, \quad w = \frac{8 f^{\text{lbs}} I}{h l}$$

$$\therefore \quad \Delta = \frac{8 f I l^3}{48 h l E I} = \frac{f l^2}{6 h E} \quad \text{and} \quad \frac{l}{1000} = \frac{8000 \times l^2}{6 \times 28{,}000{,}000 \, h}$$

$$\therefore \quad \frac{l}{h} = \frac{6 \times 28{,}000{,}000}{8000 \times 1000} = \frac{21}{1}$$

Combined Bending and Tension Stress-Action.—Let the bracket in Fig. 412 support a weight W. There are two

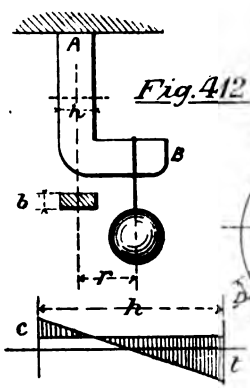

Fig. 412.

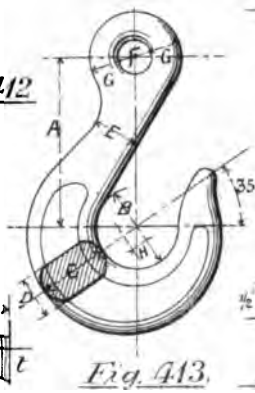

Fig. 413.

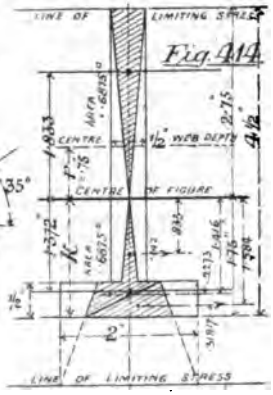

Fig. 414.

actions upon the section: bending due to moment W r, and tension by direct load W. Then—

(1) Bending action: $W r = f_o Z$ and $f_o = \frac{W r}{Z}$

or $f_t O = \frac{W r}{Z}$ and $f_t = \frac{W r}{Z O}$

(2) Tensile action: $W = f_t a$ and $f_t = \frac{W}{a}$

∴ Maximum tensile stress (on inner edge of $b h$) $= F_t = \frac{W}{a} + \frac{W r}{Z O}$

$O = 1$ for H and T sections, and $O = 1\frac{1}{2}$ or 2 for solid sections. (*See p.* 436.)

Strength of Crane Hooks.—In these, theory and practice are considerably at variance. The following table is regularly

Digitized by Google

used at Elswick, and has been well tested, the diagram being given at Fig. 413.

WROUGHT IRON CRANE HOOKS (ELSWICK PRACTICE).

Tons.	A.	B.	C.	D.	E.	F.	G.	H.
½	3 13/16	2 3/8	1 1/4	1 1/4	1	3/4	3/4	3/16
3/4	4 1/8	2 1/2	1 7/16	1 1/4	1 1/16	1 3/16	1 3/16	1/4
1	4 1/2	2 11/16	1 5/8	1 5/16	1 1/8	7/8	7/8	5/16
1½	4 7/8	2 13/16	1 3/4	1 5/16	1 3/16	1	7/8	3/8
2	5 1/4	3	2	1 3/8	1 1/4	1 1/16	15/16	7/16
3	5 5/8	3 1/8	2 1/8	1 3/8	1 5/16	1 1/8	1	1/2
4	5 15/16	3 5/16	2 5/16	1 7/16	1 3/8	1 3/16	1	9/16
5	6 5/16	3 7/16	2 1/2	1 1/2	1 7/16	1 1/4	1 1/16	5/8
6	6 21/32	3 5/8	2 11/16	1 5/8	1 1/2	1 3/8	1 1/8	11/16
8	7 3/8	3 15/16	3	1 5/8	1 5/8	1 1/2	1 1/8	11/16
10	8 1/8	4 1/4	3 5/16	1 3/4	1 3/4	1 5/8	1 3/8	3/4
12	8 27/32	4 9/16	3 3/8	1 7/8	1 7/8	1 13/16	1 7/16	3/4
15	9 9/16	4 7/8	3 7/8	1 15/16	2	1 15/16	1 9/16	13/16
18	10 1/4	5 3/16	4 3/16	2 1/8	2 1/8	2 1/8	1 5/8	13/16
21	11	5 1/2	4 1/2	2 1/4	2 1/4	2 1/4	1 3/4	7/8

Taking O = 2, we have, by formula just given,

21 *tons hook*: $a = 9{\cdot}28''$, $r = 5''$, $Z = 6{\cdot}2$

$$\therefore \quad f_t = \frac{21}{9{\cdot}28} + \frac{21 \times 5}{6{\cdot}2 \times 2} = 2{\cdot}26 + 7{\cdot}66 = \underline{9{\cdot}92 \text{ tons.}}$$

5 *tons hook*: $a = 3{\cdot}95$, $r = 2{\cdot}97$, $Z = 1{\cdot}32$

$$\therefore \quad f_t = \frac{5}{3{\cdot}95} + \frac{5 \times 2{\cdot}97}{1{\cdot}32 \times 2} = 1{\cdot}27 + 5{\cdot}62 = \underline{6{\cdot}9 \text{ tons.}}$$

1 *ton hook*: $a = 2$, $r = 2{\cdot}15$, $Z = {\cdot}5$

$$\therefore \quad f_t = \frac{1}{2} + \frac{1 \times 2{\cdot}15}{{\cdot}5 \times 2} = {\cdot}5 + 2{\cdot}15 = \underline{2{\cdot}65 \text{ tons}}$$

Digitized by Google

Apparently, stresses of 10, 7, and 3 tons are experienced with the given loads, if the co-efficient O = 2 be used. But if the bending formula be true without O, stresses of $17\frac{1}{2}$, $12\frac{1}{2}$, and 5 tons are involved. Now the elastic limit for wrought iron is from 12 to 15 tons, so the bending theory would appear to be insufficient, and further that engineers are still wise in designing hooks and such constructions by reference to the breaking load, on which a factor of not less than 6 is adopted.

Example 31.—A longitudinal steel boiler stay, 20 ft. long and 2" diameter, supports a flat area of 15 ins. sq., having on it a pressure of 120 lbs. per sq. in. Find the greatest stress in the stay due to its own weight and the steam pressure. (Hons. Mach. Constr. Exam. 1890.)

Weight of stay $w = 20 \times 12 \times 3{\cdot}14 \times {\cdot}29 = 218{\cdot}5$ lbs.

Steam pressure $P = 15 \times 15 \times 120 = 27{,}000$ lbs.

$$B_m = \frac{w\,l}{8} = f_o \frac{\pi d^3}{32} \quad \text{and} \quad f_o = \frac{14}{11}\frac{w\,l}{d^3} = 8342 \text{ lbs.}$$

$$f_t\,a = 27{,}000 \quad \text{and} \quad f_t = \frac{27{,}000}{3{\cdot}14} = 8598 \text{ lbs.}$$

$\therefore$ Total stress $= f_t + f_o = 8598 + 8342 = 16{,}940$ lbs. $= 7{\cdot}56$ tons.

Example 32.—A piece of T iron consists of a web 4" deep and $\frac{1}{8}$" thick, and a flange 2" wide and $\frac{1}{8}$" thick. Compare its strength under longitudinal pull for the two cases (1) with line of action through centre of web depth; (2) with line of action passing through centre of figure of the T. (Hons. Mach. Constr. Ex. 1888.)

See Fig. 414.

Find neutral axis by taking moments round A : $k = 1{\cdot}75$". Draw lines of limiting stress and find stress areas.

$Z = \text{area} \times \text{arm} = {\cdot}6875 \times 3{\cdot}205 = 2{\cdot}203$

$a = 3$ sq. ins. and $r = {\cdot}75$"

Case (1) $f_{max} = \frac{W}{3} + \frac{W \times {\cdot}75}{2{\cdot}203} = {\cdot}67\,W$

Case (2) $f_{max} = \frac{W}{3} = {\cdot}33\,W$

$\frac{\text{Strength (1)}}{\text{Strength (2)}} = \frac{{\cdot}33}{{\cdot}67}$ or as 1 : 2 roughly.

Combined Bending and Compression Stress-Action is calculated by the same formula as for tension and bending, by substituting f_c in the direct stress.

Digitized by Google

Example 33.—Fig. 415 shows a 'Fairbairn' crane. Draw the curve of bending moment for all sections, and design a suitable section at A B, taking $f_o = 5$ tons. (Hons. Mach. Constr. Ex. 1887.)

B_m diagram is given in Fig. 415, using centre line of jib as base line. At each section the

Moment = W × horizontal arm to axis of section.

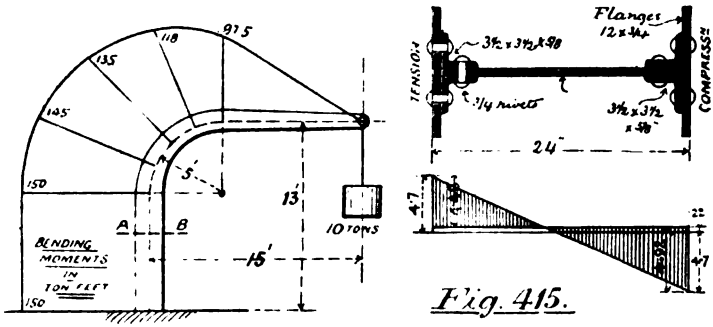

Fig. 415.

Section at A B can only be obtained by trial and error, and has thus been found in Fig. 415. Checking by approximate method:

$$\left.\begin{array}{c}\text{Area of two angles, one flange, and}\\ \text{portion of web between angles}\end{array}\right\} = 16 \text{ sq. ins.}$$

$$Z = ah = 16 \times 24 = 384 \quad \text{and total area} = 45 \text{ sq. ins.}$$

$$r = 15 \times 12 = 180''.$$

$$\therefore f_{max} = \frac{10}{45} + \frac{10 \times 180}{384 \times 1} = \cdot 22 + 4\cdot 7 = 4\cdot 92 \text{ tons.}$$

Ships' davits are similarly calculated, but their sections are like that of a crane hook, and the same precautions apply.

Strength of Pillars and Struts.—Although these fail by compression and bending, the action is not so simple. Struts having a length of ten or twelve times their diameter are reckoned for direct crushing only, but longer pillars bend before breaking. Euler* devised a formula to give the greatest load consistent with stability, that is, beyond which the bar could not restraighten. Let $Q = \frac{\pi^2 E I}{l^2}$. Then the stable loads w are given in the following table:—

* Pronounced 'Oyler.'

Digitized by Google

EULER'S FORMULÆ FOR LONG COLUMNS.

	One end fixed, the other free	$w = \frac{1}{4}\frac{\pi^2 E I}{l^2}$	$= \frac{1}{4} Q$
	Both ends free but load guided	$w = \frac{\pi^2 E I}{l^2}$	$= 1\ Q$
	One end fixed the other free, but load guided	$w = 2\frac{\pi^2 E I}{l^2}$	$= 2\ Q$
	Both ends fixed, and load guided	$w = 4\frac{\pi^2 E I}{l^2}$	$= 4\ Q$

A factor of safety of 5 must be employed, and I can be found either from table (*p.* 429) or graphically (*p.* 431). The neutral axis for I must lie *across the greatest width of section.*

Euler's rules do not compare favourably with experiment, so engineers prefer Gordon's formulæ, which are a modified form of those made by Hodgkinson from his experiments. They give

Digitized by Google

the breaking stress only, and an arbitrary factor must be applied Then:

(1) For pillars with both ends flat and carefully bedded:

$$f \text{ breaking} = \frac{a}{1 + br^2}$$

(2) For pillars with both ends jointed or imperfectly fixed:

$$f \text{ breaking} = \frac{a}{1 + 4br^2}$$

$r = \frac{l}{\text{shortest diameter}}$: and values of a and b are as follows:

Gordon's Constants.	Tons.	
	a	b
For solid or hollow round C. I. pillars ...	36	$\frac{1}{400}$
„ solid rectangular C. I. pillars ...	36	$\frac{1}{600}$
„ solid round W. I. pillars	16	$\frac{1}{2500}$
„ solid rectangular W. I. pillars ...	16	$\frac{1}{3000}$
„ pillars of L T ⊓ + or H section, W.I.	17	$\frac{1}{3000}$
„ solid round pillars { mild steel ...	30	$\frac{1}{1400}$
„ solid round pillars { strong steel ...	50	$\frac{1}{900}$
„ solid rectangular pillars { mild steel	30	$\frac{1}{2480}$
„ solid rectangular pillars { strong steel	50	$\frac{1}{1600}$

Some results from these formulæ are shown in Fig. 416, and will be found handy for reference. A factor of safety of at least 6 must be used, and 10 or 12 in the case of moving parts. Then:

$$W = \frac{f^{\text{breaking}} \times \text{area of section}}{\text{factor}} \text{ tons.}$$

Claxton Fidler demonstrates (Paper, Inst. C.E, 1886) that pillar strength 'cannot be defined by any hard or fast line, but only by an area' (viz.: that enclosed between his curve or Gordon's, and Euler's), 'within which experimental results place themselves at haphazard.' (*See Appendix II.*)

Digitized by Google

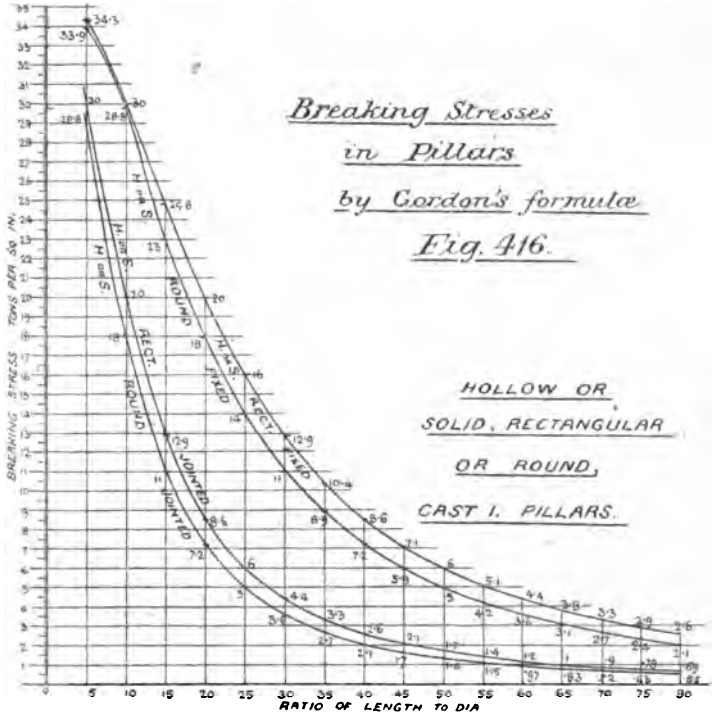

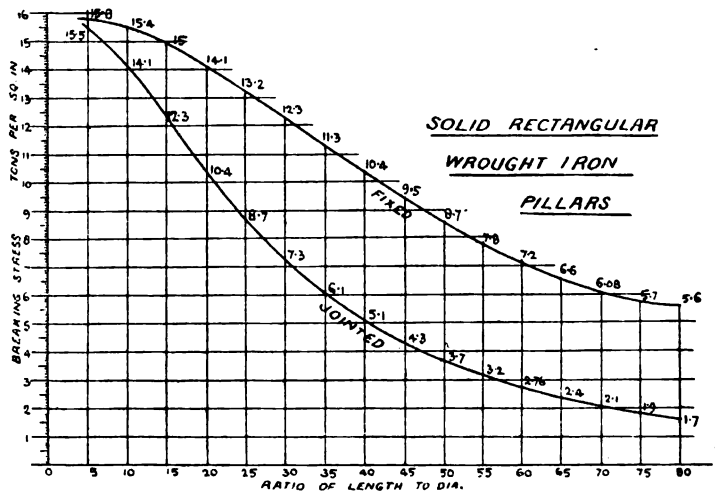

Digitized by Google

Example 34.—Find the diameter of a steel connecting rod 10 feet long for a maximum load of 70 tons. (Hons. Mach. Constr. Ex. 1886.)

$$f_{bg} = \frac{a}{1+4\,b\,r^2} = \frac{30}{1+\frac{4}{1400}\times\frac{l^2}{d^2}} = \frac{210\,d^2}{7\,d^2+288}$$

$$W = \frac{f_{bg}\times \text{area}}{10}$$

$$\therefore\ 70 = \frac{210\,d^2\times 22\times d^2}{(7\,d^2+288)\times 7\times 4\times 10},\ \text{and solving the quadratic,}$$

$$\underline{d = \sqrt{52{\cdot}85} = 7{\cdot}27''\ \text{at centre}}$$

For the small end $W = f_c\,a$

$$\therefore\ 70 = 4\times\frac{\pi d^2}{4}\quad \text{and}\quad \underline{d = \sqrt{22{\cdot}27} = 4{\cdot}7''\ \text{at small end.}}$$

The rod must be tapered as shown in Fig. 417 to meet the bending stress in the large end, due to pendulum motion.

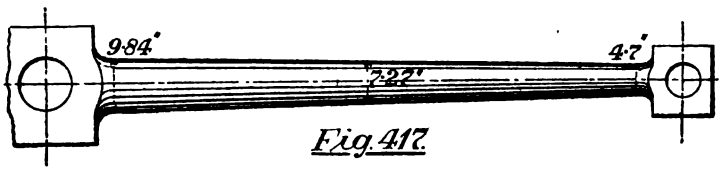

Fig. 417.

Strength of Furnace Tubes. — No satisfactory theory having been propounded for these, we are driven to the adoption of empirical formulæ obtained experimentally. A tube pressed from outside is in a condition of unstable equilibrium, and if long enough fails by bulge or collapse. Then, for *plain unstrengthened tubes*, where length is from 400 t up to 10 d,

$$\text{Safe } p = \frac{3{,}500{,}000\,t^2}{ld}\ \Big\}\ \text{By Fairbairn and Unwin.}$$

$$\text{Or safe } p = \frac{90{,}000\,t^2}{(L+1)\,d}\ \Big\}\ \text{By Board of Trade.}$$

For *tubes strengthened by non-collapse rings* whose distances apart = 400 t or less, the stresses in the material are directly compressive, and bulging cannot occur. Then

$$\text{Safe } p = \frac{8000\,t}{d}\ \Big\}\ \text{By Board of Trade.}$$

Digitized by Google

If the rings are further apart, the first formulæ are applied, with L or l = distance between rings.

For Fox's corrugated tubes, } Safe $p = \frac{14{,}000\, t}{d}$ } By Board of Trade.

where d = *least* diameter.

Combined Torsion and Bending exists more or less in all shafting.

In pure bending: $f_t = \frac{B_m}{\frac{\pi d^3}{32}}$

and In pure torsion: $f_s = \frac{T_m}{\frac{\pi d^3}{16}}$ (*See also Appendix II.*) p 858

Combining these into *one direct stress* f_e, it can be shown that

$f_e = \frac{B_m + \sqrt{B_m^2 + T_m^2}}{\frac{\pi d^3}{16}}$ which is the stress caused by a twisting moment $B_m + \sqrt{B_m^2 + T_m^2}$, } or a bending moment of { $\frac{B_m + \sqrt{B_m^2 + T_m^2}}{2}$

∴ In combined bending and torsion:

(1) Equivalent twisting moment = $B_m + \sqrt{B_m^2 + T_m^2}$

(2) Equivalent bending moment = $\frac{B_m + \sqrt{B_m^2 + T_m^2}}{2}$

The first is most used. Let the shaft in Fig. 418 be under two pulls, D_1 and W. B_m due to W is found by Case IV. and set off at DE. B_m due to D_1 is shown by the diagram GJH; where GJ is formed by the balancing force at G, and action shown at V. MOPN is the total B_m, having regard to sign. Twisting only occurs between W and X, and is drawn at QSRT to the same scale as the B_m. Now combine MOPN to form the equivalent diagram *abcdefg*, every ordinate of which is obtained from the auxiliary diagram Y. Thus, take B_m on MN and T_m on QR, and, placing them at right angles, join the hypotenuse; then turn B_m round into line with the latter, and measure off the total ordinate upon *ag*. The total shaded diagram thus obtained

Digitized by Google

is the *equivalent* T_m, and the darker diagram, half of this, is the *equivalent* B_m.

Example 35.—In Fig. 419 are some dimensions of a crank shaft Let P = 1 ton when at right angles to plane A C B, T_m being balanced by a couple M at D. Find greatest $B_m + T_m$ and diameter of shaft when $f_s = 6$ tons. (Hons. Mach. Constr. Ex. 1893.)

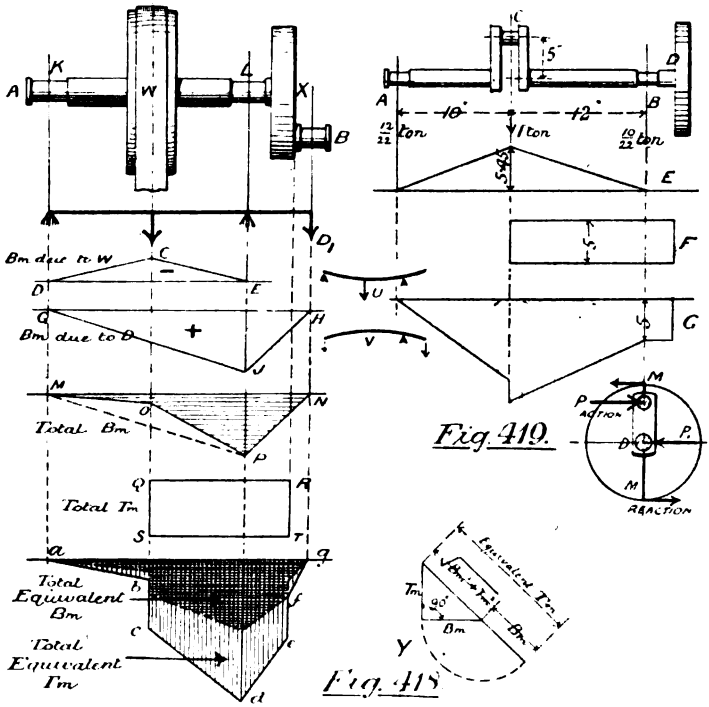

The end view shows how P_1 must be introduced to make the couple $P P_1$ complete. Then P_1 produces a B_m of $\frac{10}{22} \times 12 = 5{\cdot}45$ ton ins. as in diagram, and P gives a T_m of 5 ton inches.

$$\therefore \text{ Greatest equivalent } T_m = 5{\cdot}45 + \sqrt{54{\cdot}7} = 12{\cdot}85$$

and $$d = \sqrt[3]{\frac{T_m \, 16}{f_s \, \pi}} = \sqrt[3]{\frac{12{\cdot}85 \times 16 \times 7}{6 \times 22}} = 2{\cdot}2''$$

Digitized by Google

Example 36.—The crank in Fig. 420 is acted on by a force W, which causes a B_m on the shaft equal to half the T_m, Find a and h in terms of d, so that all shall be equally strong. If $d = 2''$, find the sizes. (Hons. Mach. Constr. Ex. 1889.)

$$T_m = W r \quad \text{and} \quad B_m = \frac{W r}{2}$$

$$\therefore \; T_{eq} = B_m + \sqrt{B_m^2 + T_m^2} = \frac{W r}{2} + \sqrt{\left(\frac{W r}{2}\right)^2 + (W r)^2} = 1{\cdot}618 \; W r$$

$$\therefore \; 1{\cdot}618 \; W r = f_s \frac{\pi d^3}{16} \quad \text{and} \quad W = \frac{{\cdot}121 \, f d^3}{r} \quad \ldots \quad \ldots \quad \ldots \quad (1)$$

$$W \frac{2}{3} r = f \frac{b h^2}{6} \quad \text{and} \quad b = \frac{3}{8} h \quad \therefore \; W \frac{2}{3} r = f \frac{h^3}{16} \quad \ldots \quad \ldots \quad (2)$$

Substituting (1) in (2) $\dfrac{{\cdot}121 \, f d^3 \times 2 r}{r \times 3} = f \dfrac{h^3}{16}$ and $h = \sqrt[3]{1{\cdot}29 \, d^3} = 1{\cdot}09 \, d$

$$a \frac{d}{4} \frac{d}{2} = \frac{\pi d^3}{16} \quad \therefore \; a = 1{\cdot}5708 \, d$$

Then if $d = 2''$ $h = 2{\cdot}18''$ and $a = 3{\cdot}1416''$.

Combined Torsion and Compression Stress-Action.—When a shaft is under thrust and torsion at the same time, the stable load for the former is, by Euler:

$$w = \frac{\pi^2 \, EI}{l^2}$$

and, if both actions be considered, according to Professor Greenhill:

$$w_1 = \frac{\pi^2 \, EI}{l^2} - \frac{T_m^2}{4EI}$$

with which a factor of 5 must be adopted. Propeller shafts are examples.

Braced or Framed Structures.—We commence the study of these by stating two rules:

Rule 1.—*If three oblique forces keep a body at rest, their directions meet at one point.*

Rule 2.—*Their proportionate value will be shown by the respective sides of a triangle drawn parallel to the forces.*

Let A and B (in Fig. 421) represent two forces in direction and magnitude. Completing the parallelogram, R is the resultant,

Digitized by Google

which can only be balanced by one *single* force, R_1, equal and opposite to R, so that triangle A C R represents the values of A, B, and R_1, and all three meet at E.

G is the force diagram, or *triangle of forces*, drawn parallel to the forces, and notice that the arrows must follow round the triangle in one direction.

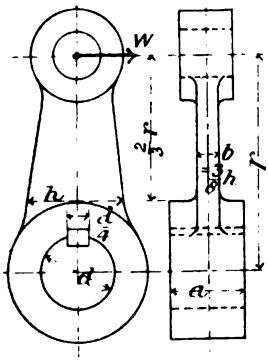

Fig. 420.

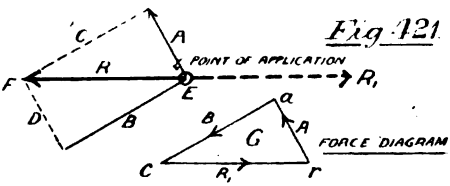

Fig. 421.

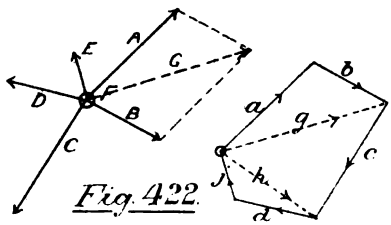

Fig. 422.

Let forces A, B, C, D, E, balance at F (Fig. 422). Drawing *a* and *b* parallel to A and B respectively, *g* is the resultant. Combining G with C, *h* is the resultant. Similarly, *j*, the resultant of A, B, C, and D, will equal E, and meet at the starting-point. Hence: *If a number of forces keep a body at rest, their relative magnitude will be shown by a polygon, whose sides, taken in order, are drawn parallel to the forces.* If all the forces are known but two, those two can be found from the *polygon of forces.*

Maxwell's Reciprocal Stress Diagrams.—The force diagram of a framed structure will consist of several polygons in juxtaposition, representing the stress caused in the members by the action of the loads. It is known as the reciprocal stress diagram, and the extension is due to the late Professor Clerk-Maxwell, though found independently by Mr. W. P. Taylor. The method of lettering invented by Mr. Bow is not the least

Digitized by Google

important part of the system, which we shall now illustrate by a few examples.

Simple Roof Truss (Fig. 423).—(1) *State all the external forces* (loads and reactions). The rafters divide their weights equally at a, b and a, c respectively. The reactions must balance the direct loads at b and c, and the load at a in addition, so that $R_{t1} = 13{\cdot}9$ and $R_{t2} = 16{\cdot}1$. The ceiling weight does not affect the truss directly.

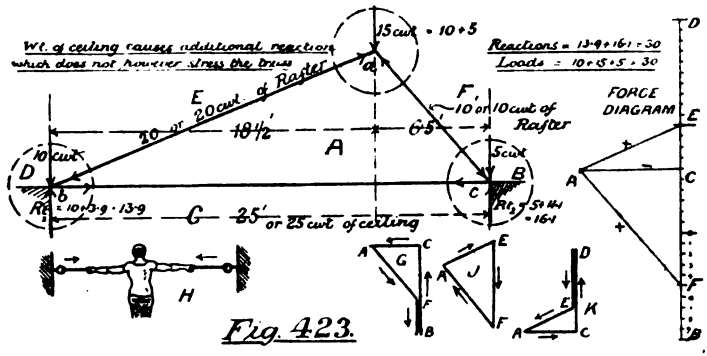

Fig. 423.

(2) *Assign a letter to each cell.* Ot these there is but one, the triangle A.

(3) *Place a letter in each division of the external space, as formed by the lines of forces.* These are at B, C, D, E, F in the figure.

(4) *Draw the force diagram for every set of radiating forces.* Take the four forces at corner c, each defined by the spacial letters thus: F B, B C, C A, A F. (Adhere to one method, preferably a right-handed rotation.) Set off the vertical F B in force diagram = 5 cwt.: and B C = 16·1 cwt. Draw C A ‖ to bottom member $b c$. Then A F must be ‖ to $a c$, and must *meet at starting-point* F. The steps are clearly shown by the figure at G. Notice that the arrows must *follow* round in the force diagram. The novice may imagine a dotted circle round each set of forces to avoid confusion caused by seeing two arrows on one member in opposite directions. The reason of the latter is explained at H, where the same pull is felt in opposite directions on the walls. If the

Digitized by Google

polygon does not properly close, the arrows may not be in the right direction, and a new examination must be made.

Next take the point *a*, and draw the triangle FA, AE, EF in the manner shown at J. EF should measure 15 cwts. Finally, draw the polygon EA, AC, CD, DE for the point *b*, as shown at K, making CD = 13·9 cwts. and DE = 10 cwts. And the stresses in the members may now be measured off, marking + for compression, and − for tension:

+ in AF = 14·5 cwts.
+ in AE = 10·4 cwts
− in AC = 9·5 cwts.

Thick and thin lines also represent compression and tension respectively.

Suspension Bridge Chain.—A free uniform rope or chain hangs in a *catenary* curve, which is, however, so nearly like a parabola that the latter is always substituted for simplicity in practice. Taking the chain in Fig. 424, supposed weightless, but with loads at even distances as shown, the forces at L and B are necessary to keep equilibrium, and the chains will be in tension as shown by the arrows. Supposing reactions to be $3\frac{1}{2}$ each, the triangles ABC, ACD, AEF, &c., are drawn in succession. Then the distribution of load may be found for CD, DE, EF, &c., and the stresses in the chain also measured.

Warren Girder with Symmetrical Loads.—*First, Distributed on lower boom* (Fig. 425). The cells are equilateral triangles, and the girder has been much used for American bridges. Loads being 1, 1, 1, reactions are $1\frac{1}{2} + 1\frac{1}{2}$, and the force $1\frac{1}{2}$ at J causes compressions in HB and HA, but tensions in AJ and AB. The force diagrams are drawn for points 1, 2, 3, 4, 5, &c., and the total diagram is given in the figures JKGDA. Measuring the latter, we find the stresses to be as follows:—

In AH and HG = 1·73 +	In HB and HF = 1·73 +
,, BA and GF = 1·73 −	,, HD = 2·31 +
,, CB and FE = 0·58 +	,, AJ and GK = 0·86 −
,, DC and ED = 0·58 −	,, CM and LE = 2·02 −

Digitized by Google

Second, let a Warren girder be loaded *centrally on top boom.* The diagram is found at Fig. 426, and can be easily followed.

Warren Girder with Unsymmetrical Load (Fig. 427). —The load is placed on the top boom and the force diagram shown

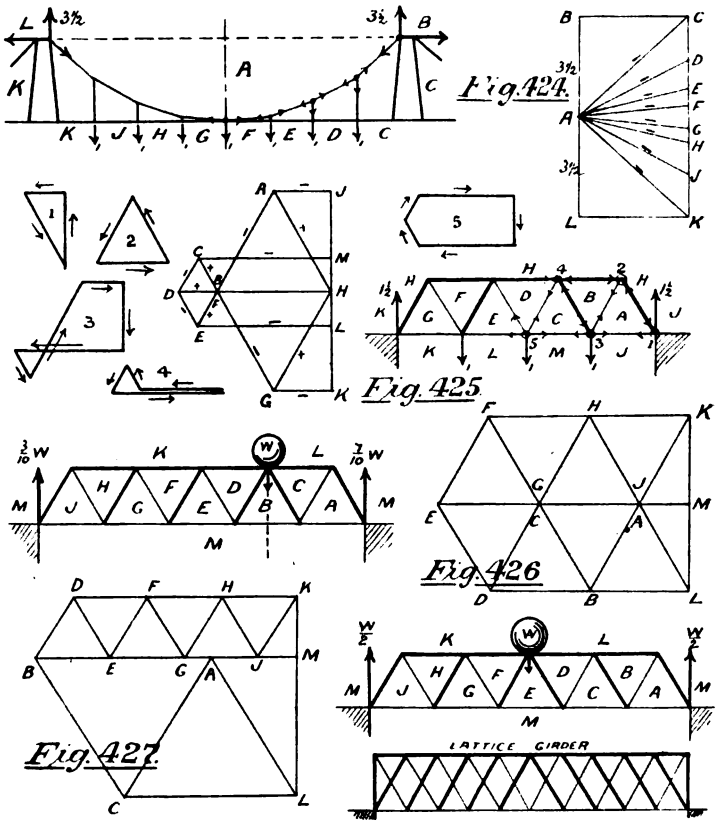

below; but may be worked for other conditions. K M is, of course, $\frac{3}{10}$ W, and M L $\frac{7}{10}$ W, and all the figures should close at B. If W be placed at each apex successively, and a separate diagram found for every case, we may, after examination, find the maximum stresses due to *rolling load.* Then Fig. 425

Digitized by Google

gives stresses due to bridge-weight, and 427 those due to locomotive, &c. Tabulate the stresses so as to find the maxima, thus:

Member.	Rolling Load.					Maximum live load.		Stress due to dead load.	Total maximum.
	1st position	2nd position	3rd position	4th position	5th position	+	−		
AH	...	...	...	..	...	...	...	...	+
HG	...	...	...	...	...	...	...	...	+
BA	...	...	...	...	...	...	...	...	−
&c.									

After which the bars are designed to meet the stresses, either as ties or struts. A *lattice girder* is shown in Fig. 426, being two Warren girders superposed.

Example 37.—The post, tie rod, and jib of a crane (Fig. 428) are 15, 45, and 50 feet long respectively. Find all the stresses, (1) with barrel on tie rod; (2) with barrel on jib, with a load of 5 tons. (Eng. Exam., 1887.)

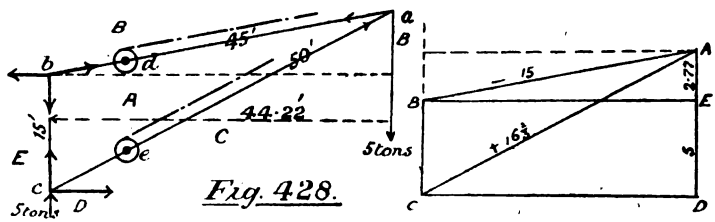

Fig. 428.

Reactions.—Load produces both turning effect and downward pull, resisted by equal horizontal forces at *b* and *c*, and by 5 tons upward force at *c*. That at *b* is supplied partly by bending strength of post, and partly by balance-weight. Letter the truss.

First, suppose the weight hung from *a* as a fixed point. Draw B C in stress diagram = 5 tons, and complete triangle B C A. Passing to *b*, E A must be a pull to produce equilibrium, and B A E is the force triangle. Finally, forces at *c* are shown by polygon A C D E A, and stresses are:

on A B = 15 − on C A = 16·66 + and on A E = 2·77 −

Digitized by Google

Also E B = C D = 14·74.

and weight couple = righting couple

Tons.	Feet.		Tons.	Feet.
5 × 44·22		=	14·74 × 15	
221·1		=	221·1	

Case (1). Stress in tie rod from *d* to *a* becomes $-15 + 5 = 10$ tons −

Case (2). Stress in jib from *e* to *a* becomes $+16\frac{2}{3} + 5 = 21\frac{2}{3}$ tons +

other stresses being unaltered. The advantage of Case (1) is obvious If the barrel be between *d* and *e* the stress must be resolved on the two members. As the load varies from nothing to a maximum, the righting moment of balance weight should be half the maximum.

Redundant Members are such as receive no stress according to force diagram, but contribute usually to resist buckling. In Fig. 429, cross-members connect weak strut B with strong tie A,

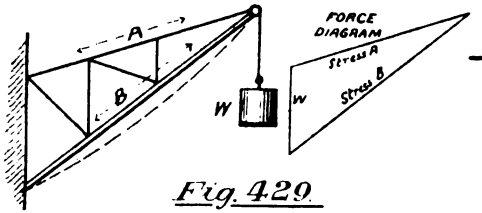

Fig. 429.

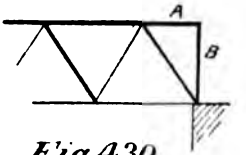

Fig. 430.

but otherwise receive no stress. In Fig. 430 A is redundant, but receives stress due to instability of strut B. (*See Appendix III.*)

Example 38.—A crane is constructed as in Fig. 431. Draw the stress diagram for internal and external forces. (Hons. Mach. Constr. Ex. 1888.)

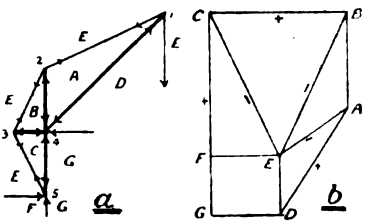

Fig. 431.

The crane is shown at *a*, and the stress diagram found at *b*, commencing with the weight E D.

Digitized by Google

Roof-truss with Five Cells.—Two cases have been worked in Fig. 432; the first for vertical load only, and the second for wind pressure only.

Case (I). *Vertical load* due to:

(1) Weight of roof and rafters, between two principals.
(2) Weight of snow on ditto.

} = 2 W

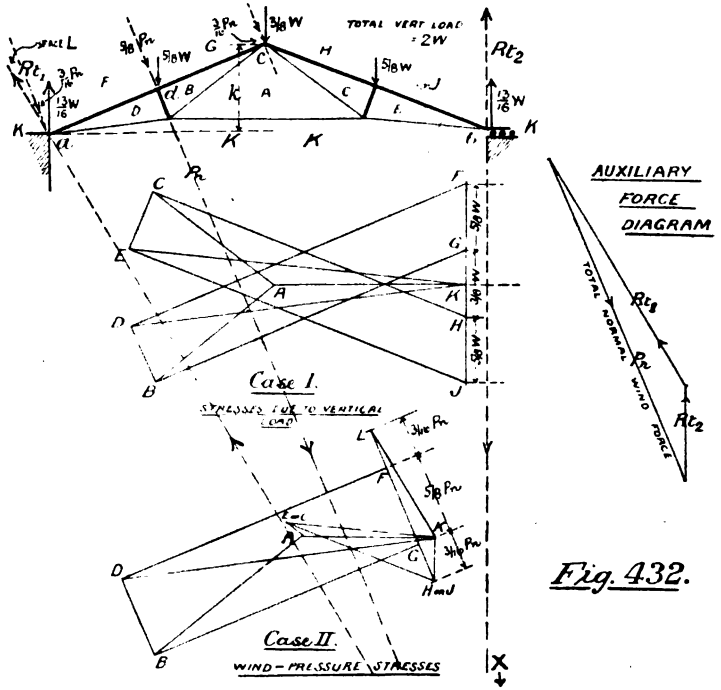

Fig. 432.

Taking each side of roof (1) + (2) must be distributed as $\frac{3}{16}$ W, $\frac{10}{16}$ W, and $\frac{3}{16}$ W at the three points respectively, making reactions = total load, 2 W; the forces are then as given; and after lettering the spaces, the stress diagram is found as below.

Case (II). *Oblique load* due to wind pressure. Considering the wind to blow horizontally exerting a force of from 40 to

Digitized by Google

60 lbs. per sq. ft. (according to the exposure) upon the area ($k \times$ width of bay).

$$\text{Total force } P_t = 56 \times k\, w', \quad \text{say, in lbs.}$$

Then P_t may be resolved into two forces, one parallel to the rafter, and one (P_n) normally, and

$$P_n \text{ total} = \frac{P_t \times k}{a\, c}$$

This force is distributed at a, d, and c as $\frac{3}{16}$ P_n, $\frac{5}{8}$ P_n, $\frac{3}{16}$ P_n In iron roofs the expansion is usually allowed for by fixing one end (a) and leaving the other free (b), which allows us to say the reaction, R_{t_2}, is vertical. Now R_{t_1}, R_{t_2}, P_n are three balancing forces, and must meet in one point X, found by producing P_n to meet R_{t_2} produced. Then joining a X, the direction of R_{t_1} is found, and the amounts R_{t_1} and R_{t_2} further obtained from the auxiliary diagram. If the wind blow from the right, P_n is exerted on $c\,b$, and x will be above instead of below b (Case III.). Both II. and III. must be examined, though we only have space for Case II. Take the lettering as in I., with the exception of the additional external space L, and draw the stress diagrams as shown below.

Finally, tabulate the stresses for Cases I., II., and III.: then add I. to II. and III. separately to find the maximum stresses, and design the members to suit. (*See Appendix IV.*)

Framed Structures of Three Dimensions are such as include a solid instead of an area. They must be solved by a step-by-step process, taking each plane in succession. We will explain by means of an example.

Example 39.—A sheer legs (Fig. 433) is formed of two fore legs 145′ long and 60′ apart at the base, and a back leg 170′ long attached to a nut having a travel of 40′. The maximum overhang is 40′, and load 100 tons. Find the stresses in the members, (1) and (2), at each end of the nut stroke; (3) when the load is directly over the base plates. (Hons. Mach. Constr. Ex. 1888.)

Case I. Nut at D.—Taking first the plane A D B, the diagram P shows stresses in A B = 174 tons, in A D = 82 tons.

Turning to the end view, the stress of 174 in A B must be resolved in each leg, as in diagram Q, giving stresses

in $a\,b$ and $a\,c$, each = 88 tons.

Digitized by Google

Case II. Nut at E.—R is the first diagram and S the second, giving stresses

in $A_1 B = 92$ tons, and in $a b$ and $a c$ each $= 47$ tons.

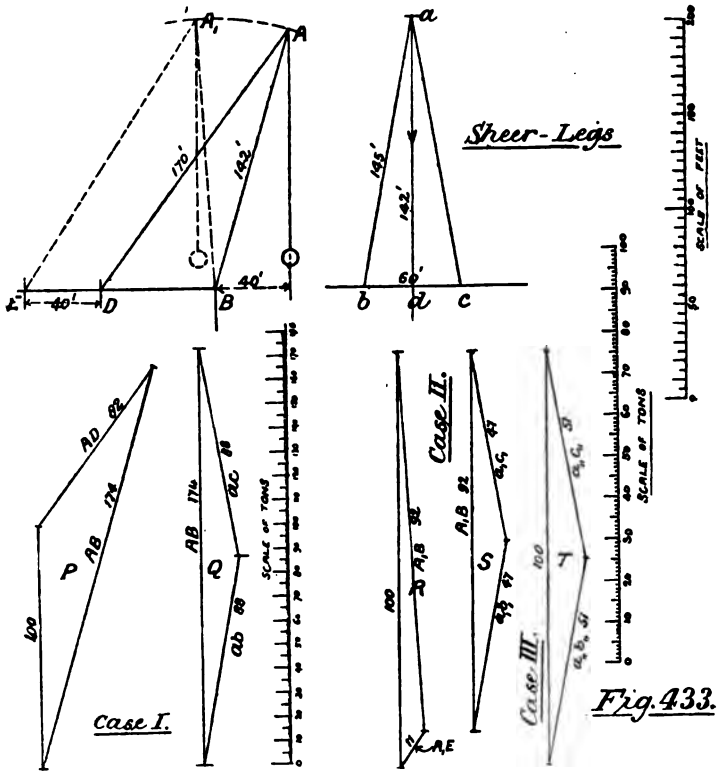

Fig. 433.

Case III. is worked entirely from the end view. 100 tons is to be distributed on the fore legs, causing no stress in the back leg. Then by diagram T, stresses are

in $a b$ and $a c$ each $= 51$ tons.

Digitized by Google

CHAPTER IX.

ON ENERGY, AND THE TRANSMISSION OF POWER TO MACHINES.

We commence with a few definitions and explanations.

Force and Mass.—Engineers use 'gravity' units for these: the unit of force being 1 lb. and that of mass 32·2 lbs. (g) or:

$$\text{mass} = \frac{w}{g}.$$

Velocity is estimated in feet per second. If *uniform*, the distance travelled (s) depends both on rate and time occupied: thus,

$$s = tv \quad \text{(distance = time × velocity)}$$

shown graphically at A, Fig. 434. The area B shows similarly the distance travelled, under *variable velocity* given by the curve; the areas being measured as at Fig. 326, Chapter VIII.

Acceleration (f) is the increase of velocity during each second. *Uniform acceleration* is produced by any constant force, the latter being measured by the increase of momentum it produces.* Momentum = mass × velocity.

$$\therefore \text{Force producing acceleration} = \frac{w}{g} \times f.$$

Uniformly Accelerated Velocity.—A body starting from rest at O (C, Fig. 434) has its velocity gradually increased by the amount f during each second t, and the final velocity is $4f$. But the total time is 4. Therefore final velocity,

$$v = ft \ldots\ldots (1)$$

and the distance is shown by the area under the velocity curve at C, or:

$$s = \frac{v}{2}t = \tfrac{1}{2}ft^2 \ldots\ldots (2)$$

Substituting value of t from (1) we have:

$$s = \frac{v^2}{2f} \quad \text{and} \quad v^2 = 2fs \ldots\ldots (3)$$

* Newton's second Law.

Digitized by Google

With an original velocity v_1 the distance is found by adding the two areas at D, Fig 434.

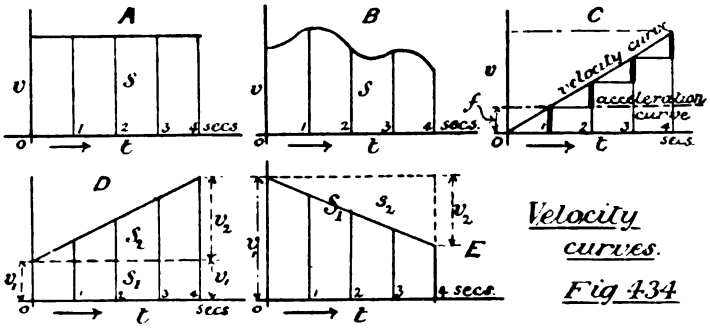

Uniformly Retarded Velocity is a similar case to D, the final velocity and total distance being found by *subtraction* of areas, as at E, and are $v_1 - v_2$ and $s_1 - s_2$ respectively.

Collating results, with v_1 as original and v_2 as final velocities,

U. A. V. from rest.	U.A.V. with original velocity.	U.R.V.
$v_2 = ft$	$v_2 = v_1 + ft$	$v_2 = v_1 - ft$
$s = \frac{1}{2}ft^2$	$s = tv_1 + \frac{1}{2}ft^2$	$s = tv_1 - \frac{1}{2}ft^2$
$v_2^2 = 2fs$	$v_2^2 = v_1^2 + 2fs$	$v_2^2 = v_1^2 - 2fs$

Example 40.—A locomotive and train weighing 100 tons start on a level, and attain a speed of 60 miles per hour within one minute What was the mean pull exerted?

$$\text{From (1)} \quad f = \frac{v}{t} = \frac{60 \times 5280}{1 \times 60 \times 3600} = \frac{22}{15}$$

$$\text{and Pull in lbs.} = \frac{wf}{g} = \frac{100 \times 2240 \times 22}{32 \times 15} = 10266 \text{ lbs.}$$

or 4·6 tons, neglecting friction.

Conservation of Momentum.—Two balls, A and B, Fig. 435, raised simultaneously, are allowed to fall, strike, and rebound. The duration of shock is called the impact, and it is

Digitized by Google

found that the added momenta of the balls is the same whether before or after impact, a fact useful in many calculations. In the case of ordnance the total momentum is divided at explosion,

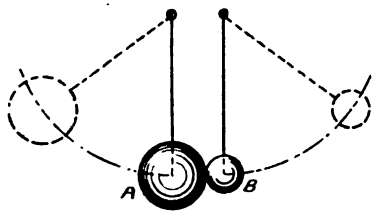

Momentum

Fig. 435.

equally between gun and carriage on the one hand, and the shot and charge on the other. Introducing a practical coefficient 1·1,

$$\text{Highest velocity of recoil} = \frac{\text{(weight of shot and charge)} \times \text{(muzzle velocity)} \times 1{\cdot}1}{\text{(weight of gun and carriage)}}$$

the quantities being in lbs. feet and seconds.

But $p = \frac{wv}{gt}$ (pp. 473–4) $\therefore$ mean force of recoil $= \frac{wv}{gt}$ and

maximum force = mean force × 2.

Energy is the capacity to do work.—*Potential Energy* is latent till some small change occurs to give it actual value: thus the chemical energy in coal requires a small starting heat, and the water in a high tank may be released by opening a small valve. *Kinetic Energy* or energy of motion, is always visible so to speak, except in the case of molecular movement merely.

EXAMPLES OF ENERGY FORMS.

Potential Energy.

1. Raised weight (solid or liquid): } Energy of position.
2. Clock spring wound up: bent bow: } Elastic Energy.
3. Compressed gas: }
4. Nerve Energy: (Capable of muscular exertion.)
5. Electrical Energy: { That due to separation of positively and negatively-electrified bodies, as in frictional electricity.
6. Chemical Energy: { Due to separate existence of elements, as in gunpowder and coal.

Digitized by Google

EXAMPLES OF ENERGY FORMS (*continued*).

Kinetic Energy.

7. Muscular Energy :	(When in motion.)
8. Gas Expansion :	*e.g.*, the wind, heat engines
9. Mechanical Energy :	As in machines.
10. Electrical Energy :	The current in motion, as in Voltaic and Faradaic electricity.
11. Heat Energy :	Being molecular motion.
12. Chemical Energy :	When combining, on account of affinity of elements.
13. Radiant Energy :	The vibration of the ether causing light and heat.

The true energy is that only which is *available*, by reason of a certain difference of 'pressure,' 'head,' or 'potential,' as measured within fullest attainable limits.

NATURE'S STORES OF ENERGY.

I. Heat Energy :	Direct from sun : probably sustained by meteoric impact.
II. Water Energy :	Due to fall from mountains to sea.
III. Wind Energy :	Due to difference of pressure caused by sun's heat.
IV. Coal Energy :	Due to chemical condition of separation.
V. Petroleum or oil Energy :	Ditto.
VI. Tidal Energy :	Due to moon's attraction, principally.
VII. Electrical Energy :	(1.) Due to separation of kind, as in thunder clouds, and untractable : (2.) Due to very small differences of potential in both air and earth, and valueless for large operations.
VIII. Food Energy :	Due to sun's action on growth of plants.

All these, excepting VI., are due to the sun's heat, which has grown coal forests and daily evaporates water. V. is probably due to a condensation of the once glowing earth.

Digitized by Google

Conservation of Energy.—In every system, the total energy, however changed in form, remains constant. This is shown by every fact we possess, and although impossible to prove directly, its rejection raises absurdities. Stated generally,

$$\text{Kinetic Energy} + \text{Potential Energy} = \text{Constant.}$$

But in its more useful form for the engineer : *in any machine*,

$$\underset{\text{(a)}}{\text{Total energy deposited}} = \underset{\text{(b)}}{\text{useful work given out}} + \underset{\text{(c)}}{\text{work lost by resistances,}}$$

unless some portion is stored for future use, as by a spring. The most usual form of (c) is frictional heat, and we are quite certain that *more* work cannot be received than was first deposited, which at once disproves the sanity of perpetual motion machines, depending as they do upon a surplus.

Transformation of Energy.—Thus, generally, potential energy becomes kinetic, and *vice versâ*, the simplest example being a pendulum which is alternately stationary but raised, and moving but fallen. Coal, potential in the mine, becomes kinetic, as heat, in the boiler; and kinetic, as mechanical energy, in the engine. Chemical energy becomes electric in the galvanic battery, and heat energy electric in the thermopile; while water may turn a dynamo through a turbine. A locomotive brake block converts mechanical energy into heat, and many other examples will suggest themselves.

Numerical Estimate of Various Energies.—A raised weight may do work in falling. Therefore its

$$\text{energy in foot pounds} = w\,\mathrm{H} \quad \text{(potential.)}$$

When reaching the ground its velocity will be (*see bottom of p.* 473):

$$v = \sqrt{2g\mathrm{H}} \quad \text{and} \quad \mathrm{H} = \frac{v^2}{2g}$$

Substituting this value in the first formula we have—

$$\text{energy in foot pounds} = \frac{w\,v^2}{2g} \quad \text{(kinetic),}$$

which may be applied to all cases of moving bodies, whatever the cause of their motion, for we may always *suppose* that the velocity has been caused by gravity, a strictly tenable artifice.

Digitized by Google

When the moving body rotates round an axis like a fly-wheel rim, the linear velocity

$$v = 2\pi R n \quad \text{and } n = \frac{N}{60}$$

$$\therefore \text{ Energy in foot pounds} = \frac{w v^2}{2g} = \frac{w(2\pi R n)^2}{2g} = \frac{w(2\pi R N)^2}{2g(60)^2}$$

$$= \cdot 0001714\, w R^2 N^2$$

where w is the weight of the moving body or fly-wheel rim. Here energy $\propto w R^2 N^2$ (*See Appendix II.*)

Example 41.—A fly-wheel of a 4 H.P. engine running at 75 revs. per m. is equivalent to a heavy rim 45″ dia. weighing 500 lbs. Find (1) ratio of its kinetic energy to the energy exerted in a revolution, and (2) greatest and least number of revs. when the fluctuation of energy is $\frac{1}{4}$ the energy of a revolution.—(Hons. Mach. Constr. Exam. 1887.)

(1) Energy per rev. $= \frac{4 \times 33000}{75} = 1760$ foot pounds.

Kin. energy of fly-wheel $= \cdot 0001714\, w R^2 N^2 = 1682$ foot pounds.

$$\therefore \text{ Ratio } \left\{ \frac{\text{Fly-wheel En.}}{\text{Rev. En.}} \right. = \frac{1682}{1760} = \frac{\cdot 955}{1}$$

(2) Let v_1 = highest vel. : v_2 = least vel. : v = mean vel.

Then $\frac{v_1 + v_2}{2} = v$ and $v_1 + v_2 = 2v = \frac{2\pi R N}{60} \times 2 = 29 \cdot 436$

Fluctuation $= \frac{w}{2g}(v_1^2 - v_2^2) = \frac{1760}{4}$: and $(v_1 - v_2)(v_1 + v_2) = \frac{1760}{4} \div 7 \cdot 764$

$$\therefore v_1 - v_2 = \frac{1760}{4 \times 7 \cdot 764 \times 29 \cdot 436} = 1 \cdot 92 \text{ ft. per sec.}$$

But $(v_1 - v_2) + (v_1 + v_2) = 2 v_1 \quad \therefore v_1 = \frac{1 \cdot 92 + 29 \cdot 436}{2} = 15 \cdot 678$

and $(v_1 + v_2) - (v_1 - v_2) = 2 v_2 \quad \therefore v_2 = \frac{29 \cdot 436 - 1 \cdot 92}{2} = 13 \cdot 758$

$$\text{Finally } N = \frac{60}{2\pi R} v = 5 \cdot 1\, v$$

$\therefore$ Highest revs. per m. = 79·95 and least revs. = 70·16

The energy of a spring or compressed gas is the average force multiplied by the distance moved : thus—

$$\left.\begin{matrix}\text{Energy of compressed} \\ \text{spring in foot pounds}\end{matrix}\right\} = \frac{\text{greatest load in lbs.}}{2} \times \text{extension in feet}$$

$$\left.\begin{matrix}\text{Energy of compressed} \\ \text{gas in foot pounds}\end{matrix}\right\} = \begin{matrix}\text{mean ordinate of total} \\ \text{pressure curve}\end{matrix} \times \begin{matrix}\text{expansion or stroke} \\ \text{of piston in feet}\end{matrix}$$

Digitized by Google

A *unit of heat* will raise 1 lb. of water through 1° Fahr. when near 39°, its greatest density; and Dr. Joule found by experiment that

One unit of heat = 772·55 foot pounds of mechanical energy.

The number 772 therefore is spoken of as Joule's equivalent (J). (*See p.* 930.)

Electrical energy may be estimated in terms of mechanical energy as follows:

$$\text{Energy in foot pounds} = \cdot 737\ E\ Q.$$

where E = Electro-motive force in volts.

and Q = Quantity in coulombs. (*See p.* 926.)

Lastly, Chemical energy is measured by its heating effect, found by careful experiment. Thus, 1 lb. of average coal will give out 12000 units of heat when completely burnt, and these may be further represented in foot pounds.

Prime Movers are machines which obtain Nature's energy at first hand for transmission of, or transformation into mechanical energy. Such are: Heat Engines, Water-Wheels and Turbines, Windmills, Electric Engines,* and Tidal Motors.

Power is direct or controlled energy, as distinguished from the free energy of Nature or that, say, of a bullet. The term has been more usually applied to mechanical energy or the mechanical equivalent of other energies, but is gradually being restricted to mean 'rate of doing work,' one horse-power being the unit.

Transmitters of Power remove the mechanical energy of a prime mover to a distance, or change the components and perhaps the whole form of the energy. The following is a list:—

1. Linkwork:	Connecting rods, coupling rods, cams and levers.
2. Shafting:	Lines of shafting, with clutches, couplings, and bearings.
3. Spur gearing:	For connecting parallel shafts.
4. Bevel gearing:	Connecting shafts at various angles.
5. Worm gearing:	Connecting shafts at right angles.
6. Belt gearing:	Connecting shafts at various angles, but chiefly parallel.
7. Rope gearing (cotton):	For high speeds.

* By voltaic battery or thermopile.

Digitized by Google

8. Rope gearing (wire):	Low speeds.
9. Pitch-chain gearing:	Instead of (6): positive driving.
10. Friction gearing:	Instead of (3) and (4).
11. Compressed air:	For storage and for mines, &c.
12. Hydraulics:	Water power for storage.
13. Electrical transmission:	May be conducted in any direction.

Comparison of Agents.—The work a prime mover or transmitter can perform in a given time may be referred to the standard *Horse-power, or* 33,000 *foot pounds exerted during one minute.* Then for *any* agent,

$$\text{Horse power} = \frac{\text{foot pounds done in one minute}}{33{,}000}$$

In this way the following results have been estimated:

Horse Power of Various Agents.

	Ft. lbs. per m.	H.P. per m.
A man raising his own weight vertically during a day of eight hours	4350	·1318
Ditto, pushing and pulling at capstan ...	3180	·0963
Ditto, turning a winch	2700	·0818
Horse pulling a cart	26150	·7924

or a man performs $\frac{1}{10}$ to $\frac{1}{8}$, and a real horse $\frac{8}{10}$ of a horse-power.

Theory of Machines.—*A machine is an assemblage of parts whose relative motions are fully constrained, and its purpose is the transmission or modification of power.* The time-honoured method has been to refer all machines, however complicated, to six simple cases,* each consisting, according to definition, of more than one part. They are:

1. The Lever:	bar and fulcrum.
2. The Wheel and axle:	handle and barrel upon axle: equivalent of continuous lever.
3. The Pulley:	block and tackle: continuous lever.
4. The Inclined Plane:	sliding plane and resistant base.
5. The Wedge:	ditto: equivalent to double inclined plane.
6. The Screw:	screw and nut: equivalent to continuous inclined plane.

* Called (wrongly) 'Mechanical Powers.'

Digitized by Google

and they can all be placed under two divisions—levers and inclined planes. There is always a point P where the power is deposited, and a point W where it is removed,* and the *Principle of Work* states that

Work put in at P = work taken out at W

neglecting resistances. But as work = force × distance,

$$P \times d = W \times D, \quad \text{or} \quad \frac{W}{P} : \frac{d}{D},$$

where d = distance travelled by P, and D that travelled by W.

This is the underlying principle, and our investigations on machines are for the purpose of finding the comparison of the *distances or speeds* at P and W, for by inversion we shall obtain the relation of the *forces* W and P. The first is the ratio of *virtual velocities*, and the second is *mechanical advantage*. Then, generally,

$$\frac{\text{vel. P}}{\text{vel. W}} = \frac{\text{force W}}{\text{force P}} = \text{Mech. Adv.} \frac{W}{P}^*$$

The Lever is shown under various forms in Fig. 436. By moments:

$$Pa = WA \quad \text{and} \quad \text{Mech. Adv.} = \frac{W}{P} = \frac{a}{A} \text{ (See Appendix I.)}$$

The Wheel and Axle, Fig. 437, is reckoned similarly, and its

$$\text{Mech. Adv.} = \frac{a}{A} = \frac{\text{handle}}{\text{barrel rad.}}$$

A *train of gearing* in Fig. 438 consists of two pairs of wheels, a handle, and a barrel. The advantage of the first pair would be $\frac{a}{A}$: of the second pair $\frac{a_1}{A_1}$: and of the wheel and axle $\frac{a_2}{A_2}$. So the total

$$\text{Mech. Adv.} \frac{W}{P} = \frac{a}{A} \times \frac{a_1}{A_1} \times \frac{a_2}{A_2}$$

* The old letters P and W being retained, are meant to represent the *forces* and also the points of application. Rankine called them *effort* and *resistance* respectively. Note that frictional and other losses are entirely neglected on pp. 481–4 and *Theoretical* mechanical advantage is therefore the result.

Digitized by Google

which can be easily proved by the levers shown below. Generally, then, for toothed gearing with wheel and axle,

$$\text{Mech. Adv. } \frac{W}{P} = \frac{\text{followers}}{\text{drivers}} \times \frac{\text{handle rad.}}{\text{barrel rad.}}$$

the wheels being estimated by teeth, radius, or diameter.

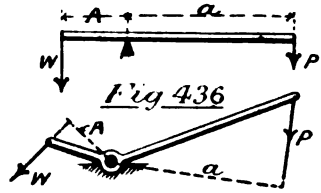

Fig 436

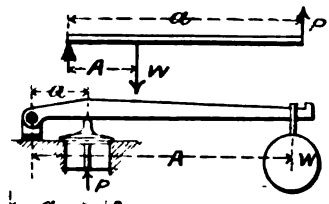

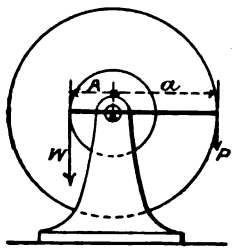

Fig. 437

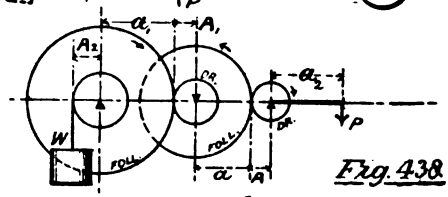

Fig. 438

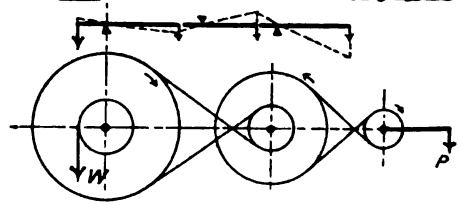

Belting is a substitute for toothed gearing, as shown in the lower diagram, a crossed belt giving the same direction of motion as one pair of wheels. N.B.—If speeds only are to be reckoned, the wheel and axle does not enter into the calculation.

The Block and Tackle (Fig. 439).—Neglecting friction, the cord has the same tension throughout, and there are (in the case shown) six pulls on the weight, each equal to P.

$$\therefore \text{ Mech. Adv. } \frac{W}{P} = \frac{6}{1} \quad \text{or generally} = \frac{\text{No. of cords}}{1}$$

In any movable pulley M, $\frac{W}{P} = \frac{2}{1}$ because W only rises half the height of P, as shown.

Digitized by Google

The *Compound Wheel and Axle* is given in its most useful form at Fig. 216, p. 204. P is the hand, and W hangs from the lower hook. Imagining the upper pulley to make one revolution:

$$\text{Mech. Adv. } \frac{W}{P} = \frac{\text{P's dist.}}{\text{W's dist.}} = \frac{\pi A}{\frac{\pi A - \pi B}{2}} = \frac{2A}{A - B}$$

The reason W rises only half the difference of circumference is that the lower pulley is movable.

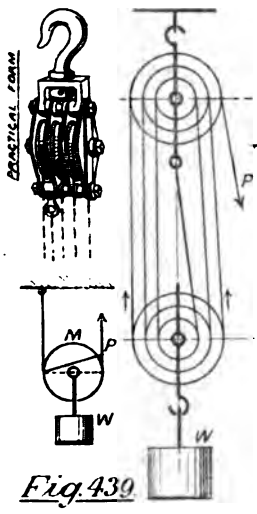

Fig. 439

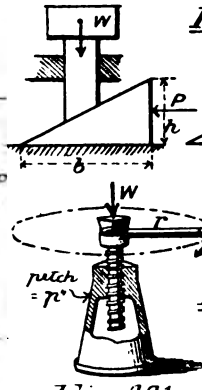

Fig. 440.

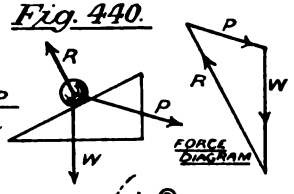

Fig. 441

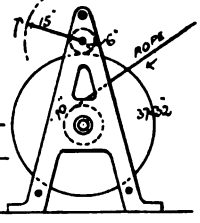

Fig. 442

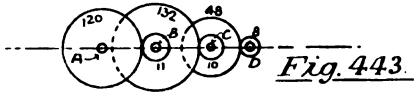

Fig. 443.

The Inclined Plane and Wedge are shown in Fig. 440. While P moves through *b*, W is lifted through *h*, and

$$\text{Mech. Adv. } \frac{W}{P} = \frac{b}{h}$$

Or, a body being held on the plane by the three forces P, W, & R (the latter being normal), the relation of the three may be found by the triangle of forces, Fig. 421. (See also p. 464.)

The Screw exists in combination with the lever, as in Fig. 441 (see also pp. 206–7). If P make one rotation

$$\text{Mech. Adv. } \frac{W}{P} = \frac{\text{P's dist.}}{\text{W's dist.}} = \frac{2\pi r}{p''}$$

Digitized by Google

Example 42.—Arrange the gearing of a single purchase crab so that 60 lbs. on a 15″ handle may raise half a ton from a barrel 10″ dia., *neglecting friction.* (Eng. Ex., 1891.)

$$\text{Mech. adv. } \frac{W}{P} = \frac{\text{follower}}{\text{driver}} \times \frac{\text{handle}}{\text{barrel rad.}} = \frac{1120}{60}$$

$$\therefore \frac{1120}{60} = \frac{\text{follower}}{\text{driver}} \times \frac{15}{5} \qquad \therefore \frac{\text{follower}}{\text{driver}} = \frac{6{\cdot}22}{1}$$

So the pitch line diameters may be 6″ and 37·32″ for pinion and wheel respectively, as in Fig. 442.

Example 43.—A shaft A has a spur wheel of 120 teeth, which drives a pinion B with 11 teeth. On shaft B is a wheel of 132 teeth driving a pinion C of 10 teeth. Lastly, on shaft C is a wheel of 48 teeth driving a pinion D of 8 teeth. A turns at 2 revs. per m. Find speed of D. (Eng. Ex., 1885.)

The wheels are shown in Fig. 443.

$$\frac{\text{vel. D}}{\text{vel. A}} = \frac{\text{followers}}{\text{drivers}} = \frac{120 \times 132 \times 48}{11 \times 10 \times 8} = \frac{864}{1}$$

$\therefore$ D makes $864 \times 2 = 1728$ revs. per m.

Example 44.—Two men at a crab exert 60 lbs. each on a 16″ handle. The pinion has 12 teeth, the wheel 72 teeth, and the chain barrel is 12″ diameter. Find the load raised, *neglecting friction.* (Eng. Ex., 1888.)

$$\text{Mech. adv. } \frac{W}{P} = \frac{\text{followers} \times \text{handle}}{\text{drivers} \times \text{barrel rod.}} = \frac{72 \times 16}{12 \times 6} = \frac{16}{1}$$

$$\therefore W = 16 \times P = 16 \times 120 = 1920 \text{ lbs.}$$

Example 45.—In a Weston block the diameter of the large sheave is 10″, and that of the smaller 9″. Find the load raised by a pull of 50 lbs., *neglecting friction.*

$$\text{Mech. adv. } \frac{W}{P} = \frac{2A}{A - B} = \frac{2 \times 10}{1} = \frac{20}{1}$$

$$\therefore W = P \times 20 = 1000 \text{ lbs.}$$

(*See Appendix IV. without fail.*)

Change Wheels in Screw-cutting.—General principles are explained at pp. 147 and 212, it being shown that:

Digitized by Google

$$\frac{\text{Revolutions of mandrel}}{\text{Revolutions of leading screw}} = \frac{\text{No. of threads per inch. on mandrel}}{\text{No. of threads per in. on leading screw}}$$

in order to cut a definite pitch. This may also be stated as

$$\frac{\text{followers at L. S. end}}{\text{drivers at M end}} = \frac{\text{pitch L. S.}}{\text{pitch M screw}}$$

or the *pitches and wheels are in the same ratio*, which ratio, being found, must be accommodated by a suitable train.

Example 46.—In Plate V., the leading screw being $\frac{3}{4}$" pitch, and the wheels in the set rising by 5 at a time from 20 to 120 teeth, it is required to arrange wheels to cut (1) a screw of 10 threads per inch, right-handed, and (2) a screw of 1" pitch left-handed.

(1) $\underline{\text{pitch ratio}}\ \frac{\text{L.S.}}{\text{M}} = \frac{\frac{3}{4}}{\frac{1}{10}} = \frac{15}{2}$

Putting 30 teeth on *n* (Fig. 135) into 75 on stud (*b*, Fig. 140): 30 teeth on stud into 90 on L.S., we have,

$$\underline{\text{wheel ratio}} = \frac{75 \times 90}{30 \times 30} = \frac{15}{2}$$ and the handle at *n* must be *down*.

(2) $\underline{\text{pitch ratio}}\ \frac{\text{L.S.}}{\text{M}} = \frac{\frac{3}{4}}{1} = \frac{3}{4}$

Putting 45 teeth on L.S. and 60 teeth on *n*; with any intermediate on stud (say 60) we have,

$$\underline{\text{wheel ratio}} = \frac{45}{60} = \frac{3}{4}$$ and the handle at *n* must be *up*.

Kinematics (of Machines) is a method of attacking machine problems devised by Prof. Reuleaux, and anglicised by Prof. Kennedy. We shall proceed to discuss its principles.

Pairs.—The constraining parts are termed pairs because they always occur in sets of two. Of these there are *higher* and *lower pairs*. The former connect by points or lines, but the latter by their whole surfaces.

Three kinds of lower pairs are possible: I. Sliding pairs, as a piston and cylinder. II. Turning pairs, as a journal or pin. III. Screw pairs, including all screws and nuts. Complete or *closed* pairs have their motions fully defined: *incomplete* pairs require further closure, as at Fig. 444, where gravity is not for the moment considered.

Digitized by Google

Kinematic Chains.—A *link* is formed when two pairs are connected, as in Fig. 445, and three or more links form a chain.

The Slider-crank Chain, Fig. 446, is the simplest of these, the fixing of each link in succession producing several

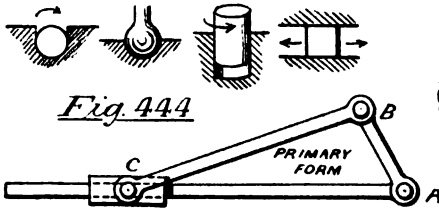

Fig. 444

Fig. 446.

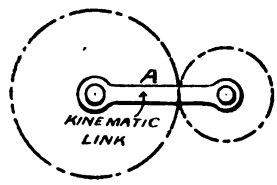

Fig. 445

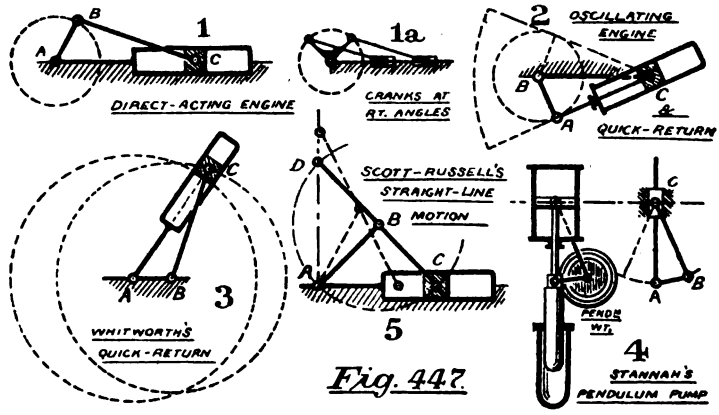

Fig. 447.

useful contrivances as in Fig. 447, variety being obtained by *inversion* or change of the fixed link, and by alteration in the relative lengths. Thus:

1. Fixing A C	gives	Direct acting engine.
2. Fixing B C	,,	Oscillating engine: and Quick-return (M, Plate X.).
3. Fixing A B	,,	Whitworth's Quick-return (Fig. 177, Plate XI.).
4. Fixing block C	,,	Stannah's pendulum pump.
5. Fixing A C (and prolonging C B to twice its length: CB = AB)	,,	Scott-Russell's straight-line motion, D making a straight line.

Digitized by Google

Closed chains have their relative motions fully constrained by *chain closure* or *force closure.* The first occurs at 3, 5, and 2, Fig. 447 ; when C drives at 3 and 5, and A at 2. But at 1 and 2, with C as driver, and at 4, dead points occur which must be overcome by fly-wheel or other force closure, unless an arrangement like 1*a* be employed, which shows coupled cranks at right angles or chain closure. Gravity is often the closing force: *e.g.*, planing machine table, and many journals.

The Double Slider-Crank Chain has three links, two turning pairs and two sliding pairs variously connected. Taking the primary form in Fig. 448,

1. Fixing A C	gives	Donkey pump mechanism.
2. Fixing A B and A C at right angles, and removing turning pair to C	„	Elliptic trammels, oval chuck, and Oldham's coupling.
3. Fixing A B and A C at right angles; putting one turning pair at C; two sliding and one turning pair at B	„	Rapson's slide (Giving an increased leverage as the tiller is moved hard over).

The **Quadric Crank Chain,** Fig. 449, has four links and four turning pairs. (*See Appendix I.*)

1. Fixing A B	gives	Beam engine: force closure by fly-wheel.
2. Fixing A B, and making A C = B D	„	Watt's parallel motion.
3. Fixing A B but making opposite links equal	„	Wheel coupling gear for locomotive: closure by double chain.
4. Ditto, but altering lengths	„	Special motion in wire rope-making: preserving verticality of drums.
5. Ditto, but doubling the chain as shown	„	Roberval's balance: allowing weight to be placed anywhere on pan.

Most lower-paired chains can be reduced to these three cases, which shows the advantage of discussing mechanism kinematically.

Digitized by Google

Fig. 448.

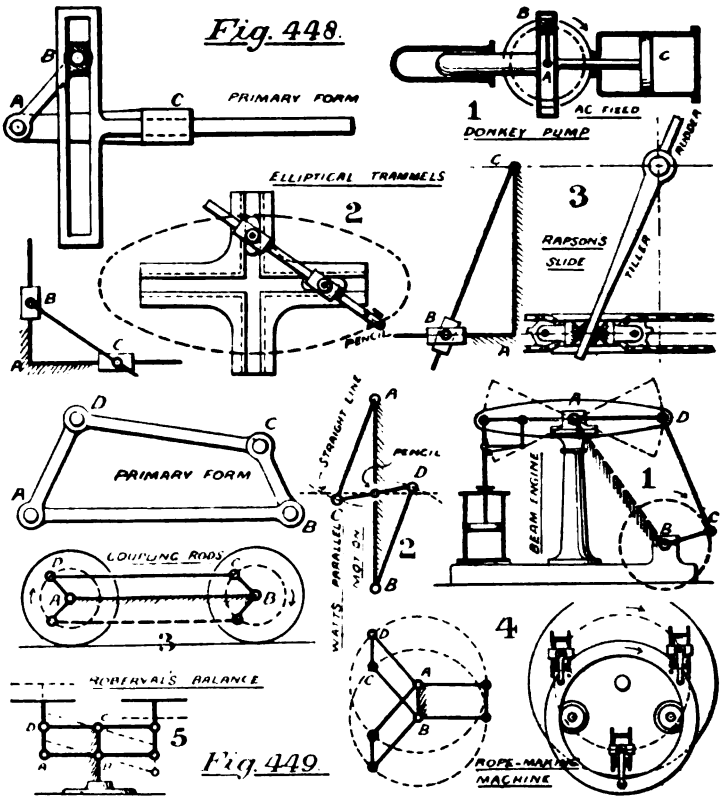

Fig. 449.

Classification of Higher Pairing.—All examples of line or point contact are included, as follows :—

Rigid Links.	Flexible Links.
Spur gearing.	(Acting also as pairs at point of contact.)
Bevel gearing (conical chain).	Pulleys of all kinds, with rope, chain, or strap connection.
Friction gearing.	
Cams.	
Escapements.	

and these are usually combined with lower pairs.

Digitized by Google

Flexible links are called *tension elements;* and fluid connections, as between boiler and engine, or accumulator and machine, are termed *pressure elements*, but the latter are always connected to lower pairs. A pump is kinematically the same as a ratchet, the valves being equivalent to pawls (see Fig. 450).

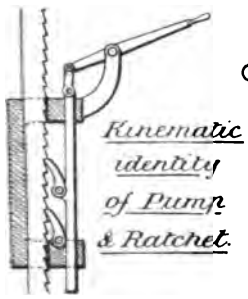

Fig. 450.

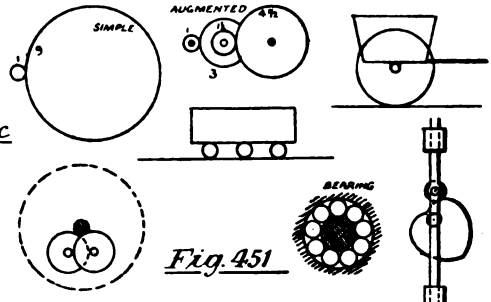

Fig. 451. Examples of Augmentation.

Augmentation of Chains is the multiplication of parts, for convenience or the reduction of friction. Trains of gearing, and anti-friction rollers (Fig. 451), are examples.

Summing up, mechanism may be divided into simple *chains*, formed of rigid or flexible *links*, which are again united by higher or lower *pairs*, and all chains must be *closed*, either by the chain or by external force.*

List of Kinematic Chains.

Lower pairing.	1. Crank chains :	Sliding and turning and screw pairs.
	2. Screw chains :	
High and low pairing.	3. Pulley chains :	Tension and pressure elements.
	4. Wheel chains :	Uniform motion.
	5. Cam chains :	Variable motion.
	6. Ratchet chains :	Intermittent motion.

A *driving* and *working* end are recognised in each of these, corresponding to P and W respectively, and the

Velocity Ratio of P and W in Kinematic Chains will now be investigated graphically. Considering the instan-

* Friction closure is one form of force closure.

Digitized by Google

taneous motion, in direction only, of the two ends P and W of a link, each point may be supposed, *for the instant*, to be travelling in a separate circle, whose radius will be at right angles to the aforesaid motion, and the two radii will, unless the directions of motion are parallel, meet on one side or other of the line P W. The meeting point is known as the instantaneous or **virtual centre**, and the *ratio of the velocities of P and W will be the same as that of the radii from the virtual centre.* Of course these may change at every instant, and the centre itself will move along a path known as the *centrode.*

Crank and Connecting Rod (Fig. 452).—In the position given, W is travelling tangentially, and W D is its virtual radius, while P is moving towards A, and has a radius P D. D then is the virtual centre, and at the instant considered, the movements being along the dotted arcs, $p_1 w_1$,

$$\frac{\text{vel. P}}{\text{vel. W}} = \frac{\text{D P}}{\text{D W}}$$

Taking various other positions, we may obtain a series of virtual centres, and through them draw the centrode E D F, where E and M are the positions of P when W crosses the line K E. The curve passes out to infinity at F and O, reappearing at L and Q, the direction being given by the line J P when W is at G and P at H. This means that P and W have then equal velocities. The relative velocities being found for any position, their inversion will give the relation of the forces P and W.

Curve of Velocities.—It is often required to construct a curve of velocities for *one* of the points, *when the other moves uniformly.* Taking the second diagram in Fig. 452, the triangles W C A and W P D are similar, so that

$$\frac{\text{vel. P}}{\text{vel. W}} = \frac{\text{D P}}{\text{D W}} = \frac{\text{A C}}{\text{A W}}$$

Assuming W to move uniformly, being provided with a fly wheel, A W *will represent crank velocity*, while the projection of P W upon the vertical at C or *c* will give A C or A *c the piston velocity.* In Fig. 453 the value A C is found and transferred to the line A W at A E, and this being done for all positions, the ovals or polar curve may be traced, whose *radius vector* always shows P's

Digitized by Google

velocity for the given position of crank, while the crank arm itself gives W's velocity. Taking various positions of P on H J, and setting up the corresponding polar radii, the curve of P's velocity is obtained as H K J, while the ordinates A W, set up dotted on a base N O of half crank circle circumference, show crank velocity.

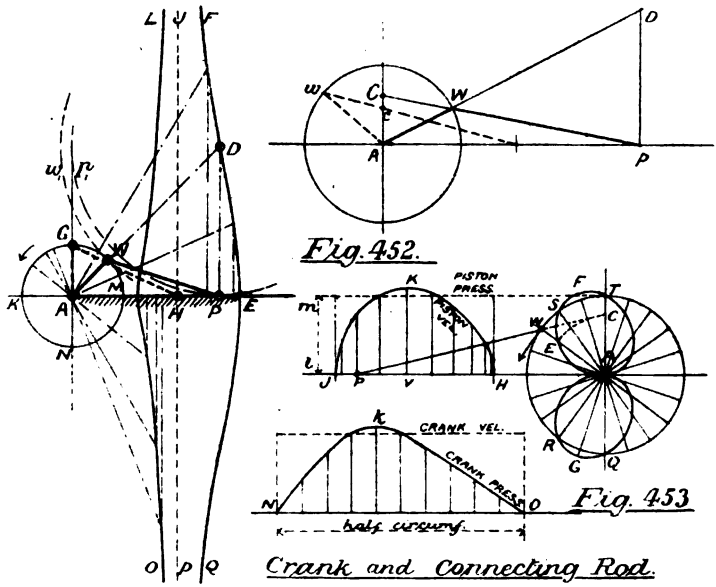

Assuming P's pressure as uniform, the ordinates *l m* will give a curve of pressure; and the A E ordinates, being transferred from the polar curve to the base N O, will give a curve of tangential pressures on crank. Notice points Q R and S T, where P and W have equal velocities, and also points F and W, where P has its highest velocity, and W its greatest pressure.

Time and Distance Bases.—The profile of velocity curve depends on the terms in which we state the base-line divisions. The curves in Fig. 434 are drawn with a *time* base line (equal times), but the oblique lines at C and D would be parabolas if a *distance* base (equal distances) were used. In Fig. 453, H J is a distance base, but supposing N O to represent

Digitized by Google

piston travel, N *k* O would be P's velocity on a time base. The ordinates at corresponding times are always the same, but the abscissæ vary, and the two cases must be thoroughly grasped by the student.

Acceleration Curves show the rate at which the velocity is changing. Let a point move from A to B, Fig. 454, with changing velocity, as shown by the curve A C B, A B being a *distance base* (here a necessity). Draw any tangent D E F and a normal E G, drop the perpendicular E H, and turn H G round to line H E, giving a point in the acceleration curve. Continuing the construction for various points, K L M is obtained, whose ordinates show acceleration from A to L, and retardation from L to B.

N.B.—If velocity and distance scales are the same, the acceleration may be measured to the same scale; but, if otherwise, and

v = ft. per sec. of velocity to one inch,
d = ft. distance to one inch,

a new acceleration scale must be made, being the velocity scale, stretched or compressed in the ratio $\frac{d}{v}$. (*See Appendix II.*, *p.* 863; *see also p.* 674.)

The Oscillating Lever is examined in Fig. 455. The virtual radii are drawn: W B a normal to the circumference, and P B perpendicular to W J. Then:

$$\frac{\text{vel. P}}{\text{vel. W}} = \frac{\text{B P}}{\text{B W}} \quad \text{or as} \quad \frac{\text{A D}}{\text{A W}}$$

For A D being ⊥ to J B, the triangles W D A W J B are similar. Turning A D round to A C, we obtain one point in the polar curve, found as at Fig. 456, where A D W is right angle. W's velocity being uniform, the polar radii show P's velocity. The centrode curve passes to infinity at K, N, G, and P, the direction of the dotted lines being at right angles to W P, when the latter is tangential to the crank circle, namely when P and W have uniform velocities.

Whitworth's Quick-return Motion (Fig. 457).—B P being the driver, revolving uniformly, the velocities of W are to be found. Imagine the links moved by a very small amount v:

Digitized by Google

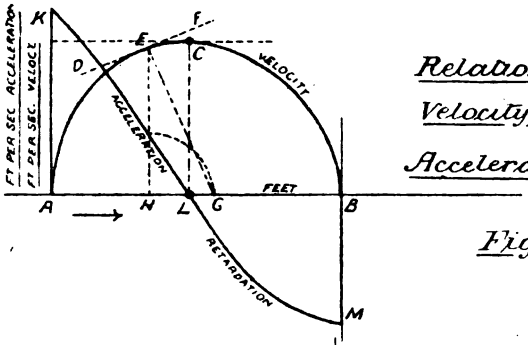

Relation of Velocity and Acceleration curves.

Fig. 454.

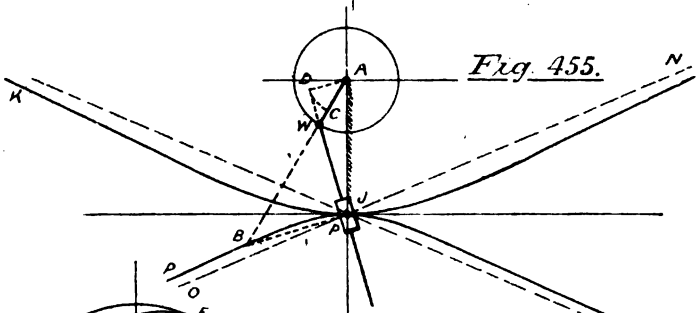

Fig. 455.

Oscillating Lever.

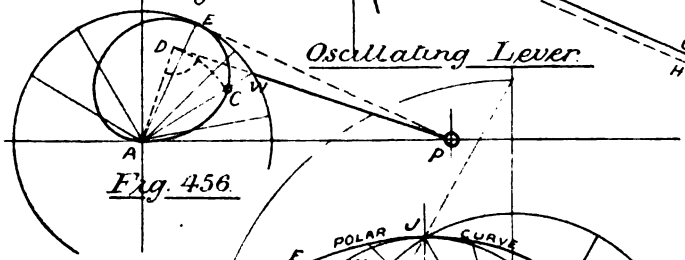

Fig. 456.

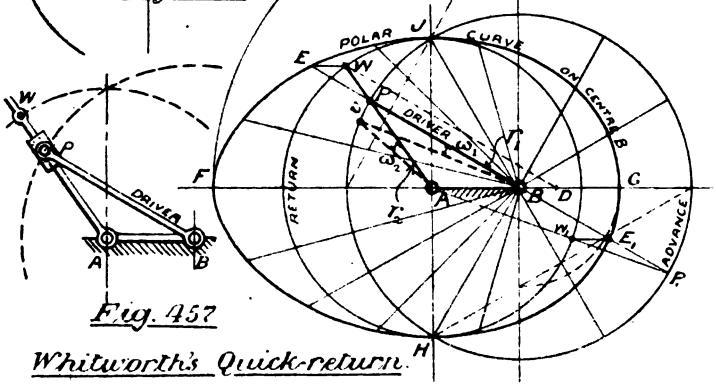

Fig. 457.

Whitworth's Quick-return.

Digitized by Google

let A P $= r_2$ and B P $= r_1$, while the angular velocities are respectively ω_2 and ω_1. Stated in circular measure (arc upon radius):

$$\omega_1 = \frac{\text{T}'}{r_1} \quad \text{and} \quad \omega_2 = \frac{\text{T}'}{r_2} \qquad \frac{\omega_1}{\omega_2} = \frac{r_2}{r_1} \quad \text{and} \quad \omega_2 = \frac{r_1 \omega_1}{r_2}$$

Conversely, linear velocity $= \omega \times$ rad.

or, veloc. W $= \omega_2 \times$ A W and vel. P $= \omega_1 r_1$

$$\therefore \frac{\text{vel. P}}{\text{vel. W}} = \frac{\omega_1 r_1}{\omega_2 \times \text{A W}} \quad \text{and} \left(\begin{matrix}\text{substituting} \\ \text{for } \omega_2\end{matrix}\right) = \frac{r_2}{\text{A W}} = \frac{\text{A P}}{\text{A W}}$$

Let the circle H J P_1 be the curve of velocity for P. Produce B P to E, drawing W E ∥ A B. Then E is a point in the polar curve for W, and B E shows W's velocity for that position of arm. Obtain several points, as E_1, by joining A P_1 and drawing $W_1 E_1$ ∥ A B. For proof draw W D ⊥ P B. Then, by similar triangles:

$$\frac{\text{A P}}{\text{A W}} = \frac{\text{P B}}{\text{W D}} = \frac{\text{P B}}{\text{E B}}$$

and from formula, $$\frac{\text{vel. P}}{\text{vel. W}} = \frac{\text{A P}}{\text{A W}} = \frac{\text{P B}}{\text{E B}}$$

At J and H the velocities are equal. Plate XI. shows the practical application of the motion.

The Pendulum Pump is treated by virtual centres at Fig. 458, where the centrode is drawn, and

$$\frac{\text{P's vel.}}{\text{W's vel.}} = \frac{\text{O P}}{\text{O W}} \text{ for any position.}$$

The Donkey Pump (Fig. 459).—Taking the lower diagram, we may imagine W moved a small amount, tangentially, as W *w*. Join W A, and drop C B perpendicular. Then, velocity being proportional to distance travelled,

$$\frac{\text{vel. P}}{\text{vel. W}} = \frac{p\,\text{W}}{w\,\text{W}} = \frac{\text{A B}}{\text{A C}} = \frac{\text{A B}}{\text{A W}}$$

for the triangles *p* W *w* and B A C are similar. A series of points, such as B, will define the polar curve, which is a circle, because C B A is a right angle (*Euclid*, iii. 31), and while A W shows W's

Digitized by Google

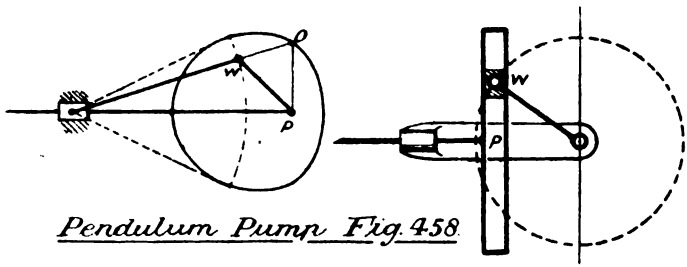

Pendulum Pump Fig. 458

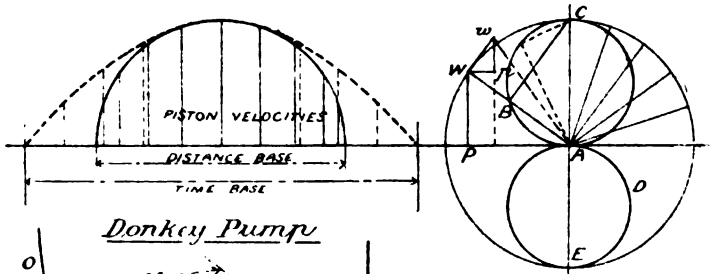

Donkey Pump

Fig 459

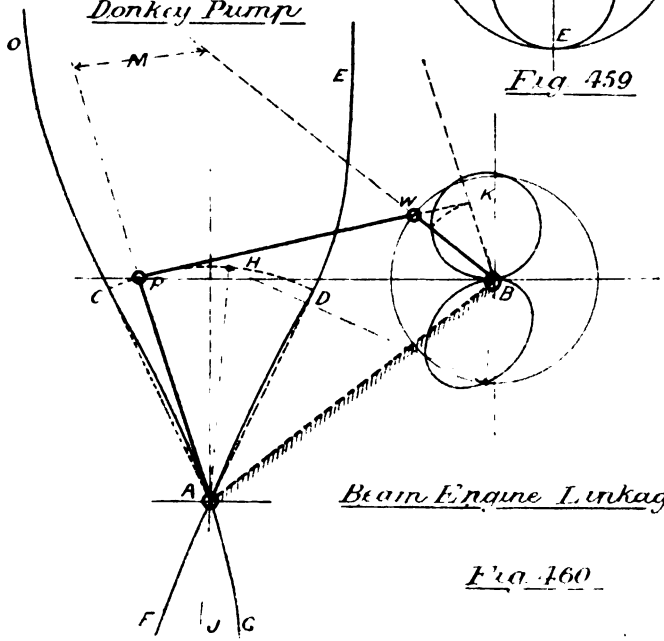

Beam Engine Linkage

Fig 460

Digitized by Google

velocity, the radius vector shows P's velocity. The motion of P is known as *pure harmonic*, and occurs often in natural science. Transferring P's velocities to a distance base gives a semicircular curve, but on a time base forms the *curve of sines*.

The Beam Engine linkage is shown in Fig. 460, with centrodes and polar curves. The lines A P, B W, being at right angles to the direction of motion of P and W respectively, will, if produced, give the virtual centre M. Then if B K be ‖ to A P, the triangles M P W and B K W are similar, and

$$\therefore \quad \frac{\text{vel. P}}{\text{vel. W}} = \frac{\text{M P}}{\text{M W}} = \frac{\text{B K}}{\text{B W}}$$

the polar curves being completed as before. The centrode curve only reaches infinity on the side J, when A H, B W are parallel; the ends O E meeting at a very great but finite distance. The polar curves are similar to those of the crank and connecting rod, P having greater velocity than W at times. When in the form 3, Fig. 449, the quadric chain has its virtual centres always at infinity, and therefore P and W have like velocities.

Point paths are often of more importance than forces, but can always be obtained by drawing the links in successive positions; and *the mechanical advantage of a complex system is the product of the advantages of its parts.* Taking now the power transmitters in order,

(1.) **Linkwork** is suitable only for short distances, as in the case of locomotive coupling rods, and is rather a modifier than a transmitter. We shall take a few further examples.

The Stanhope Levers, Fig. 461, were applied by Lord Stanhope to his printing press. Two plan views are given: at first P and W have nearly equal velocities, but when they have moved to the positions P_1 and W_1, the latter has *no velocity*, while the former has yet the original motion.

$$\therefore \quad \frac{\text{P's vel.}}{\text{W's vel.}} = \frac{1}{0} \quad \text{and} \quad \frac{W}{P} = \frac{\text{infinity}}{1}$$

This means that a very great pressure is exerted at W when the paper and type are in contact. A polar curve for W's velocity has been drawn in the right-hand diagram, considering P's velocity

Digitized by Google

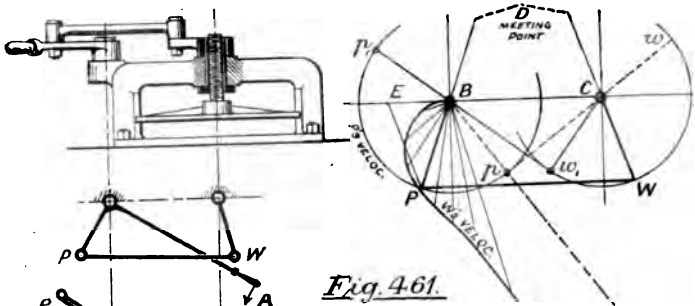

Fig. 461.

Stanhope Levers

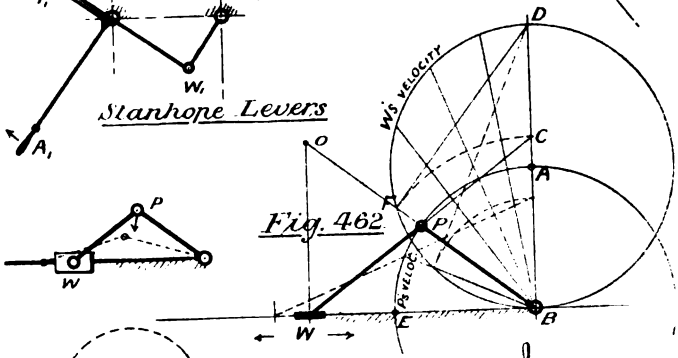

Fig. 462.

The Toggle-joint.

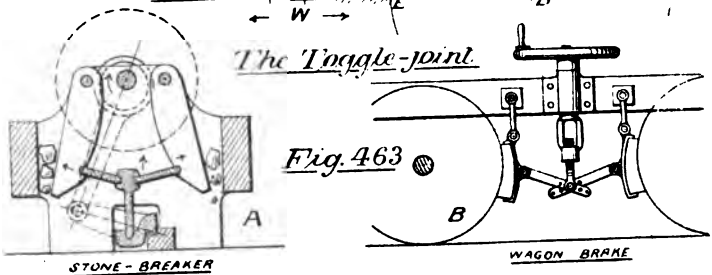

Fig. 463.

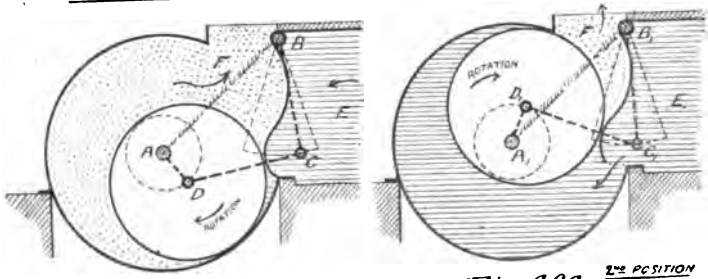

Cooke's Ventilator. Fig. 464.

Digitized by Google

constant. D is the virtual centre, and D P, D W the radii; and the triangle P E B being similar, P B may represent P's constant velocity, while P E shows that of W. The latter being transferred to B P, gives points in the curve shown; reaches infinity in the direction B p, and nothing in the direction B p_1. W is then respectively in the positions w and w_1.

The Toggle Joint has many useful applications, the stone-breaker and wagon-brake (Fig. 463) being examples. In Fig. 462 the joint is seen to consist of a simple slider-crank chain. O is the virtual centre, and O P, O W the radii. Producing W P to C,

$$\frac{\text{vel. P}}{\text{vel. W}} = \frac{\text{B P}}{\text{B C}} = \frac{\text{B P}}{\text{B F}}$$

and several points, such as F, will form the polar curve B F D, showing W's velocity, where P's velocity is uniform and represented by B P. The curve is a semicircle, having A as centre.

Cooke's Mine Ventilator in Fig. 464 is a case of the quadric chain. Crank and shutter shafts are connected by link C D, and A B is a fixed though virtual link. Two positions are shown, the shaded air being drawn in, while the dotted air is pushed out by the rotation of the drum.

Quick-Return Motion.—See Fig. 457.

Valve Motion for engines needs examination only for point paths, and will be treated in Chapter X.

Parallel Motions should strictly be termed *straight-line motions*, but are now best known by the first title. Watt's (Fig. 465) is the simplest. A D and B C being equal, the upward movement of P will be vertically straight, because D curves to the left by the same amount as C deviates to the right. This is extremely near the truth when α is below 20°, but not absolutely so. Thus:—

$$\theta^\circ = \frac{2r}{l}(1 - \cos\alpha) \qquad (1)$$

$$\sin\beta = \sin\alpha + \frac{l}{r}(1 - \cos\theta) \qquad (2)$$

$$\text{Deviation of P from vertical} = \frac{r}{2}(\cos\alpha - \cos\beta) \qquad (3)$$

assuming C D to be vertical at central position.

Digitized by Google

To use the formula, first find θ, then the angle for sin β, and finally the deviation, which is really due to a slight inequality between α and β. If $l = 12''$ and $r = 24''$, then when $\alpha = 20°$, $\beta = 20° 2'$ and the deviation is ·00576″, but is practically uncalculable at much below 20°.

Peaucellier's motion, Fig. 466, consists of seven links, and is ingenious but unpractical. It may, however, be adopted for

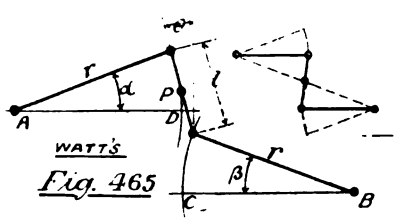

Fig. 465

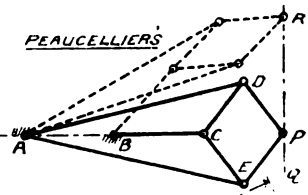

Fig. 466

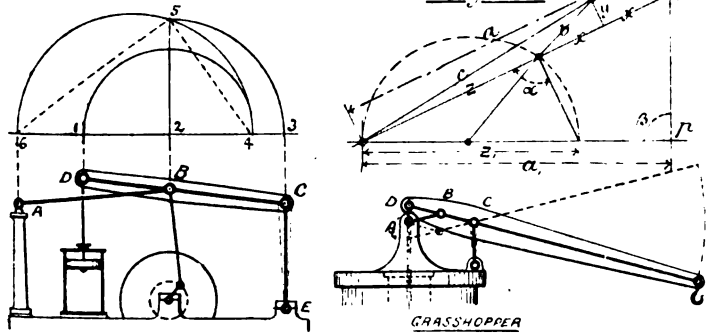

Fig. 467. Parallel Motions.

extreme travels, being absolutely correct. P describes the vertical straight line P R, which may be proved geometrically, first premising that D P, P E, E C, and C D are equal, while A B = B C.

$$c^2 = y^2 + (z + x)^2 = y^2 + z^2 + 2xz + x^2$$

$$b^2 = y^2 + x^2$$

Subtracting, $c^2 - b^2 = z^2 + 2xz = z(z + 2x) = za$

This being strictly general, we have, at position p,

$$c^2 - b^2 = z_1 a_1 \quad \text{and} \quad z a = z_1 a_1$$

Digitized by Google

or $z : z_1 :: a_1 : a$, and the triangles are similar, so that angle α = angle β. But α is a right angle, being in a semicircle.

$\therefore$ Angle β is *always* a right angle, and

pr is a straight line.

Scott-Russell's motion 5, Fig. 447, merely copies at A D the truth of the slide C, D A C being always a right angle. A more convenient form is the

Grasshopper motion, Fig. 467, where the slide is replaced by a long link. The gear may be formed (1) with A B = B C = B D as in Fig. 447, or (2) A B : B C : : B C : B D, the second being used in grasshopper engines and the first in a steam crane built by Messrs. R. & W. Hawthorn, where a piston connects directly with D to lift the load. The relation of the links in case (1) may be found graphically: produce points D, B, C, to the respective positions 1, 2, 3, on the base line 1, 3,: with centre 2 strike arcs 1, 4, and 3, 5: join 4, 5, and draw 5, 6, at right angles to 5, 4. Then 6 produced gives point A, and length of A B; for 5, 2 is a mean proportional between 6, 2 and 2, 4.

The Feathering Paddle-Wheel is shown in Fig. 468. If the vessel move to the right with a velocity v_s while the wheel rim has a linear velocity of v_f, the floats should enter and leave the water in the directions v_r if they are to meet the water without shock, for v_r is the relative velocity of float to water, found by completing the parallelogram. The controlling mechanism is obtained by quadric chain H G K E where H G is the fixed link.

Stresses in Linkwork Members may be ascertained from the principles in Fig. 423 *et seq*, the structure being balanced by known external forces.

The Work Done at any point of a machine is obtained as at Fig. 325. Taking the case of harmonic motion for donkey pump, let total piston pressure P be uniform during stroke d': then Pd' = work done at P and is shown by diagram in Fig. 469. Setting out the pressure-curve for W, on a base π R, as explained in Fig. 453, the mean of the ordinates will be found to be ·636 P, and as

$$\text{work put in} = \text{work taken out}$$
$$P \times 2R = \cdot 636\ P \times \pi R$$

Digitized by Google

which are equal, or no work is either lost or gained in transmission, if friction be neglected.

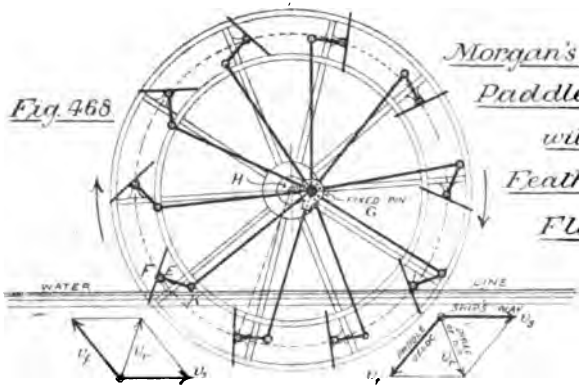

Fig. 468. Morgan's Paddle-wheel with Feathering Floats.

Fig. 469.

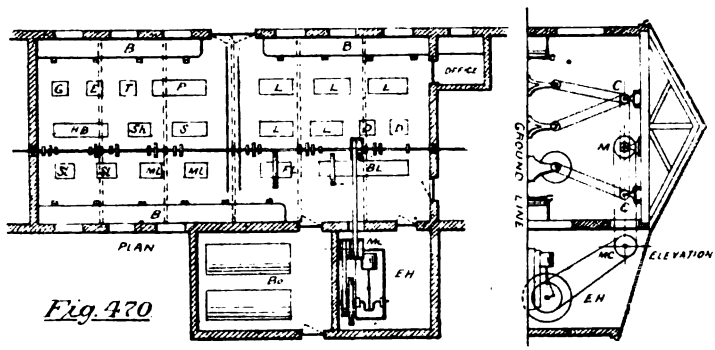

Fig. 470.

Arrangement of Machine Shop.

(2.) **Shafting** is used extensively for power distribution in workshops, being combined with belting and toothed gearing. Fig. 470 is the plan of a small shop as usually arranged. The

Digitized by Google

engine being fixed at E H does not drive the main shaft M directly, but through the medium of a main countershaft M C, so that M may be stopped by moving the second strap on to the loose pullies, and the engine's rotation be unaffected. The shafting is supported by special bearings termed hangers, and by plummer blocks in the wall thickness; the hangers are bolted to the roof principals, about 10 ft. apart. The machines are next arranged conveniently: in the diagram L L are lathes, D D drilling machines, F L a face, B L a break lathe, P a planing machine, H B a horizontal boring machine, S H a shaping and S L slotting machines, M L milling machines, G a grindstone, E an emery wheel, and T a drill grinder, while S is a surface plate. Next, short countershafts are placed at C C, one to each machine; and the power taken first to these and thence to the machine, enabling the latter to be stopped and started by moving the horizontal belt, without taking the vertical one from off the cone pullies. The pullies should be placed as near bearings as possible, and be well balanced to avoid vibration. Where one speed only is desired, C is not necessary; G, E, and T are cases in point, and D D have the countershaft contained in the machine. The shaft might decrease in diameter, when further from the line M C, M; but convenience in changing pulley position requires it to be uniform, and if average-sized machines (about ¼ H.P. each) are to be driven, the pulley is simply gripped tightly on the shaft, both being made to Whitworth gauge: the main pulleys must, however, be keyed.

Naturally, considerable power is required merely to turn the shaft without further transmission: this may be from 25 to 50 per cent. of the total power required when fully loaded. (*See App. II*)

B B are fitters' benches, and B O is the boiler house.

Couplings connect the separate lengths of shafting, the most usual form being the flange coupling, Fig. 471, consisting of two discs, one keyed to each shaft, and both bolted together, the bolt-heads being sunk for safety: for strength, see Fig. 373. Couplings should be placed near bearings, and sometimes serve as pullies. Marine shafts have the discs forged on to reduce weight, and thus form *solid* couplings (see Plate XVII., facing p. 686)

Clutches unite shafts, or pullies and shafts, so as to admit of disengagement when required. Fig. 472 shows the common

Digitized by Google

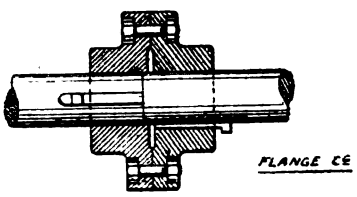

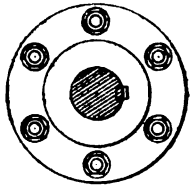

Fig. 471

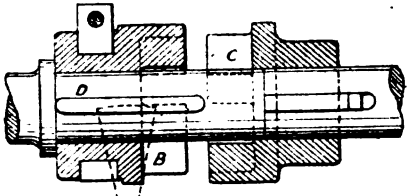

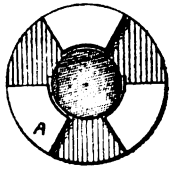

CLAW C€

Fig. 472

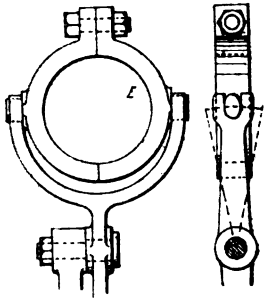

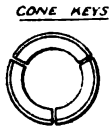

CONE KEYS

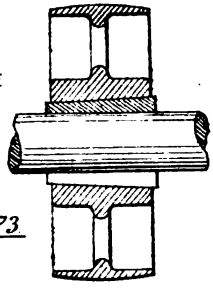

Fig. 473

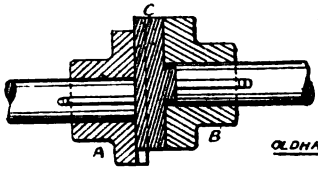

OLDHAM'S

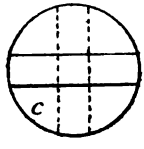

Fig. 474

Fig. 475.

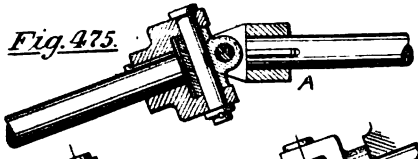

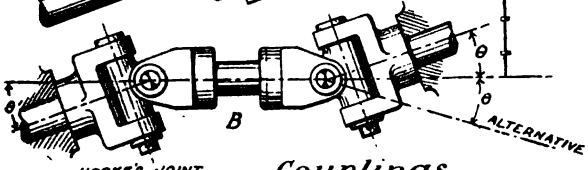

HOOKE'S JOINT

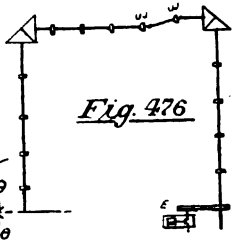

Fig. 476

Couplings.

Digitized by Google

'claw' clutch. C is fixed by key to the right-hand shaft, and B slides on a pair of feather keys D in the left-hand shaft, so that the claws at A may be locked or unlocked. The clutch strap E encircles the clutch B, and is further grasped by the fork lever: this gives a sufficiency of wearing surface between the rotating clutch and stationary lever. The difficulty of entering the jaws is met by the adoption of friction clutches. (*See pp.* 569–70.)

Two shafts slightly out of line but mutually parallel may be united by the *Oldham coupling*, Fig. 474. A middle plate C, having cross strips, unites with grooves in the flanges A and B, and the velocity is transmitted unimpaired. If the shafts are mutually inclined, the *Hooke's or Universal Joint*, A, Fig. 475, must be employed, and if considerably out of line though parallel, B must be used. A transmits the velocity unevenly, but the double arrangement B rights this difficulty. Fig. 476 was adopted for many years at a northern establishment: E is the engine, and U J are universal joints, while the three shafts represent three separate shops. (*See Appendices I. and II.*)

Keys were examined in Figs. 374–5. The sunk key is best, but the flat key is more often used in shop shafting. *Cone Keys* (Fig. 473) are made from a hollow cone, turned and afterwards divided: they give a very perfect grip.

Keys should have a taper in depth from front to rear, and a gib-head adopted as in Fig. 477, if there are no means of otherwise releasing the key. Although some workmen fit keys at top and bottom only, they should no doubt fit accurately both at top and sides. Shrinking boss on shaft gives very great security. Keys are sometimes forged on the shaft.

Feather or sliding keys can be fastened either to boss or shaft as most convenient. See A and B, Fig. 478.

Bearings are strictly gun-metal supports termed bushes, but the supporting brackets take various forms. Fig. 479 is a common hanger, Fig. 480 a wall box, and Fig. 482 a wall bracket. The last two have bearing and bracket separate to allow of adjustment. Fig. 481 shows a special hanger, having a long cast-iron bearing lying in a spherical seat which adjusts itself automatically to the shaft deviation. Permanent vertical adjustment is obtained by screw and nut.

Digitized by Google

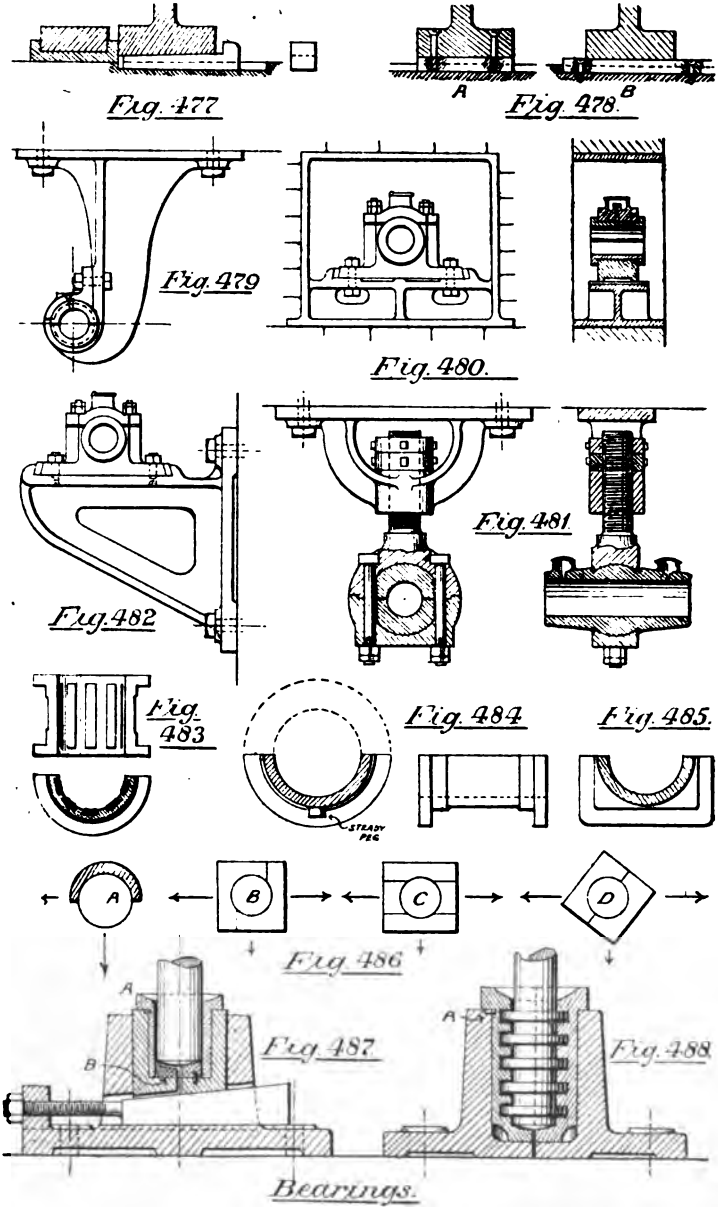

Digitized by Google

Footstep Bearings, Fig. 487, are required for vertical shafts. Gun-metal bush A prevents side motion, and plate B, of hard steel, supports the shaft. Even then there is considerable wear, the end being of comparatively small area, so the cotter is sometimes introduced to adjust the bearing. There must be both inlet and outlet for oil to secure good lubrication.

Thrust Bearings serve either as footsteps for heavy shafts or to resist considerable end pressure in other directions. Fig. 488 shows the former. The bushes are in halves, being inserted with the shaft, and the key A prevents their rotation. In the example there are five annular surfaces resisting wear: one only is used in a *collar bearing*. (*See pp.* 691 *and* 871.)

Bushes are of gun-metal or brass, and in halves as at Fig. 484. Being planed on the meeting edges, they may then be soldered together, turned, and afterwards split. If made square, as in Fig. 485, they are planed throughout. Their position in the bearing depends on direction of pull, Fig. 486 giving examples, where A is an axle box, and B, C, and D horizontal engine bearings. If one brass only can be used, the oiling is more perfect (see Fig. 580). Fig. 483 shows grooves filled with white metal, as adopted with large shafts having variable moments, or where oiling is difficult; the particles of soft metal cover the surface, and form a lubricant to prevent seizing.

Journals on shafting are often required to prevent end movement: they are formed either by turning down, as at A, or forging collars as at B (Fig. 489). The allowable journal load per sq. in.

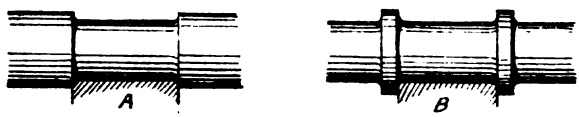

Journals Fig. 489

is reckoned on the projected area $l \times d$, and varies very much with the speed of the journal surface, being low enough to avoid squeezing out the oil. High-speed shafts have their journals made as small as strength will permit, while the surface is obtained by increased length, and the work lost in friction thereby reduced;

Digitized by Google

but in slow-speed shafts the frictional loss depends very little on the speed, and the journal diameters are therefore large. The following very useful table is taken from 'Unwin's Machine Design':—

ALLOWABLE PRESSURE ON PROJECTED AREA OF JOURNALS.

Purpose.	Pressure in lbs. per sq. in.
Very slow speed journals	3000
Cross-head journals	1200
Crank pins for slow engines	800 to 900
Marine crank pins	400 to 500
Marine crank bearings	400 to 600
Railway journals	300
Crank pins for small engines	150 to 200
Marine slide blocks	100
Stationary-engine slide-block	30 to 60
Propeller thrust bearings...	50 to 70
Main shafting in cast-iron bushes (Seller)	15

The ratio of l to d must next be decided by the following empirical formula:

$$\frac{l}{d} = \cdot 003N + 1$$

which agrees well with practice. For the journal in Fig. 481, at 100 revs. per m., the ratio is 4 : 1.

Pivots supporting the ends of vertical shafts should not be loaded beyond 250 lbs. per sq. in. for perfect lubrication.

Horse-power Transmitted by Shafting.—Taking a round shaft, let w be applied to the end of a 12″ arm.

$$w \times 12 = \frac{f^{\text{lbs}} \pi d^3}{16} \quad \text{and} \quad w = \frac{f^{\text{lbs}} \pi d^3}{12 \times 16}$$

Digitized by Google

w being exerted through 2π feet at every revolution:

$$\text{H.P.} = \frac{w \times 2\pi N}{33000} = \frac{f^{\text{lbs}}\, \pi\, d^3}{12 \times 16} \times \frac{2\pi N}{33000} = \frac{f^{\text{lbs}} d^3 N}{320810}$$

$$\text{and } d = \sqrt[3]{320810} \sqrt[3]{\frac{\text{H.P.}}{f^{\text{lbs}} N}} = 68{\cdot}44 \sqrt[3]{\frac{\text{H.P.}}{f^{\text{lbs}} N}}$$

$$\therefore\ d \propto \frac{\sqrt[3]{\text{H.P.}}}{\sqrt[3]{f}\ \sqrt[3]{N}}$$

Example 47.—A shaft transmits 20 H.P. at 100 revs. Find (1) how many H.P. it will transmit at 250 revs., and (2) dia. to transmit 40 H. P. at 250 revs. with f at 2 tons per sq. in. for stiffness.

(1) $\text{H. P.} \propto d^3 N$

$\therefore\ 20 \propto 100$ and H. P. req. $\propto 250$

$100 : 20 :: 250 : \text{H. P.}$ and H. P. = 50

(2) $d = 68{\cdot}44 \sqrt[3]{\frac{40}{2 \times 2240 \times 250}} = 2{\cdot}25''$

Example 48.—Compare the weight of shafting in a twin with tha in a single screw ship, neglecting couplings: the H. P. in each being the same and the speed of each twin being 25 % above that of the single screw. (Hons. Mach. Constr. Ex., 1886.)

$d \propto \sqrt[3]{\frac{\text{H. P.}}{N}}$ ... $\propto$ 1 for single shaft ... $\propto$ ·73 for each twin shaft.

Weights $\propto d^2$ ... $\propto$ 1 for single shaft ... $\propto$ $\begin{cases} 73^2 \times 2 \text{ or as} \\ 1{\cdot}066 \text{ for the two screws} \end{cases}$

Square Shafts are often adopted in travelling cranes. In Fig. 490, B is the longitudinal and A the cross girder of a crane the power being given from shaft D through mitre gear to F, and by spur gear to G. As the carriage moves along B, the tumbler bearings are turned through a right angle, and are only off the shaft during the passage of the mitre wheels, the bracket at E being shaped to serve as a tappet.

Digitized by Google

Long screws sometimes serve as shafts, as in large planing machines with travelling tool, and a linear advance of the screw may produce rotation if sufficiently large in pitch, as in Fig. 491.

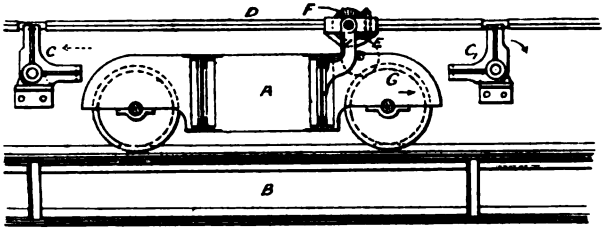

Tumbler Bearings. *Fig. 490*

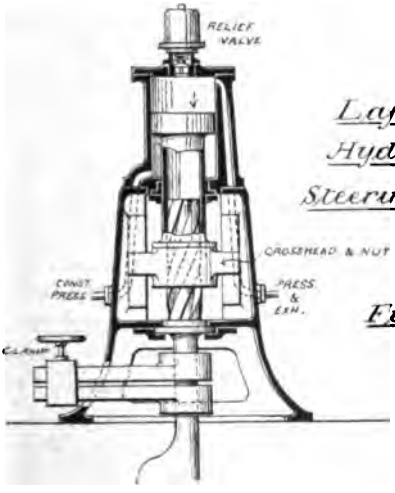

Lafargue's Hydraulic Steering Gear.

Fig. 491.

(3.) **Spur Gearing** transmits power between parallel shafts only. Spur wheels are the equivalent of friction discs, having teeth provided to avoid slipping with heavy loads. The teeth are formed partly above and partly below the disc outline, the latter becoming virtual only, and being then termed the pitch line. Thus,

Digitized by Google

Pitch Circle, Line, or Surface *of a spur wheel or rack represents the contour of the ideal disc or straight-edge which will transmit the same motion.*

To transmit perfectly uniform motion the teeth must be specially formed, and all teeth in gear at once must contribute to the perfection of the motion. To fulfil these conditions the normals to all surfaces of contact must pass through the meeting point of the pitch lines (Fig. 492), and this is obtained when one tooth *b c*, on A, is the *envelope* of the relative positions of the other tooth on B (Fig. 493) when the discs are rolled together. The teeth are actually drawn, however, in a somewhat different manner. (*See Appendix III., p.* 926.)

Cycloidal Curves.—A *cycloid* may be traced by a point on the rim of a disc which rolls along a straight edge, and an *epi-cycloid* when the disc rolls upon a circular arc (Fig. 494). A *hypo-cycloid* is similarly traced *within* an annular disc as at Fig. 495, noting that when the rolling disc is half the diameter of the annulus a straight line is obtained, as shown dotted; a fact which has produced White's parallel motion (Fig. 496).

Rolling Circle.—The above curves will serve for wheel teeth, if the same rolling circle be adopted for parts that come in contact, the tooth point being formed by epi-cycloids and the root by hypo-cycloids. Taking the wheels A and B, Fig. 497, a rolling circle is first to be chosen as governed by the root curves: thus, if the circle be half the pitch diameter, radial teeth are formed, as at C; if larger, the root will be undercut as at D; and E is drawn with a circle of $\frac{1}{4}$-pitch diameter. The latter is reasonable, as giving strength, while yet avoiding oblique pressure on bearings. Adopting then the rolling circles shown, F may roll the root of B and the point of A, because these are to engage, but G will serve for root of A and point of B. When all the wheels of a train are to work together interchangeably, the same rolling circle must be used throughout. If the tooth pressure is always in one direction, as in Fig. 499, a large rolling circle may be adopted for the acting surfaces and a small one for the back surfaces, thus giving great root strength without oblique action.

Digitized by Google

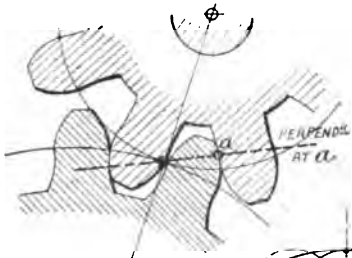

Fig. 492

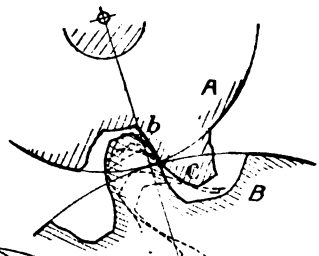

Fig. 493

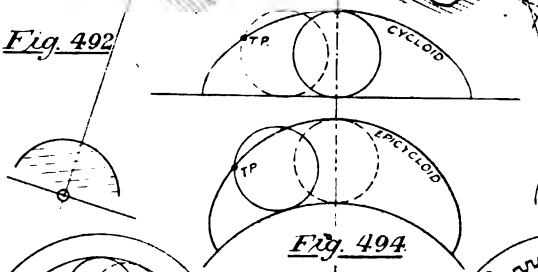

Fig. 494

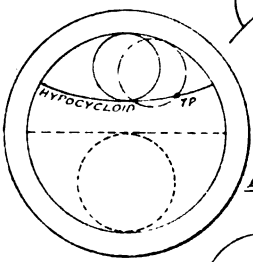

Fig. 495

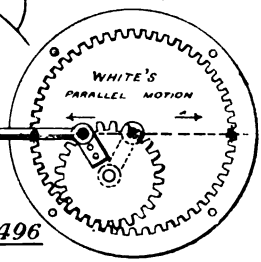

Fig. 496

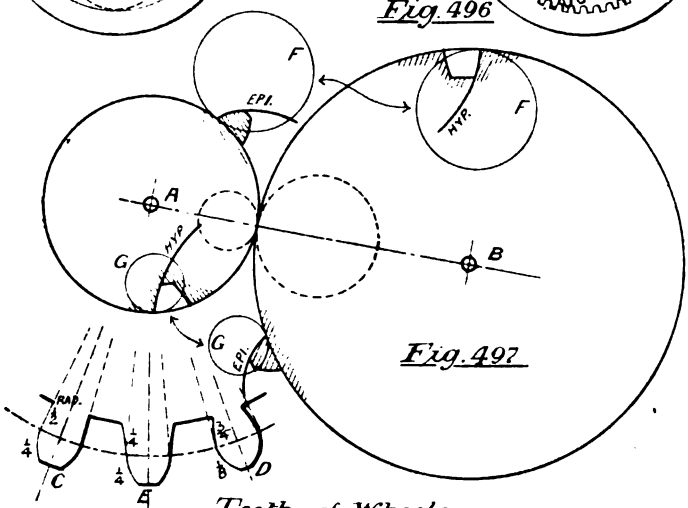

Fig. 497

Teeth of Wheels.

Digitized by Google

Rolling a Tooth.—Referring to Fig. 498, let A B be the pitch line, and C the rolling circle. As the latter rolls from D to E it takes up the various dotted positions, and the tracing point D rises to I, II, III, and *d* successively, the positions being found by making 1 I = 1 D, 2 II = 2 D, 3 III = 3 D, and E *d* = E D, in every case *measured round the curves* by stepping off with dividers. The tooth point being then sketched through, the root curve may be treated in like manner, and the dotted tooth formed by proportions found at a later page. (*See also p.* 517.)

For a rack the same rolling circle is used for points and roots, the curves being, of course, cycloids.

Rules for Small Pinions.—The ratio of wheel to pinion diameter should not exceed about 8 to 1, or the obliquity of action is great; and the number of the teeth in the pinion should not, if possible, be less than 20, though 15 and even 12 have been used in extreme cases. If the pinion be double-shrouded as at A, Fig. 500, the strength is doubled; and wear, which is very great on the pinion teeth, well provided against. Single shrouding as at B is of little advantage.

Arc of Contact.—In Fig. 501 *a* is the driver, *b* the follower, and C the rolling circle, having tracing points E D upon its circumference. Rolling C within *a*, the hypo-cycloids G H are described, and the epi-cycloids K J formed round *b*. But while C touches F, E D are equally ready to describe the one or other set of curves, which means that D and E are the only points of contact for curves G and J or H and K respectively; and all cycloidal curves drawn by C must have their contact points along the arc C E F L. Supposing *a* to be moved round in the direction of the arrow, the teeth will first touch at L where *b's* point crosses circle C; before this there would be backlash. If C_1 be struck below F, M shows the last touching point where *a's* point crosses circle C_1. The path or *arc of contact* will be L F M, L F being termed the *arc of approach* and F M the *arc of recess*. F M is rather shorter than F L, so β is slightly greater than θ, representing the greatest *angles of obliquity* at recess and approach respectively. If these be less than the friction angle,* there will

* The angle whose tan. is the coefficient of friction μ. For rough cast iron $\mu = \cdot 2$, and friction angle = $11\frac{1}{2}°$.

Digitized by Google

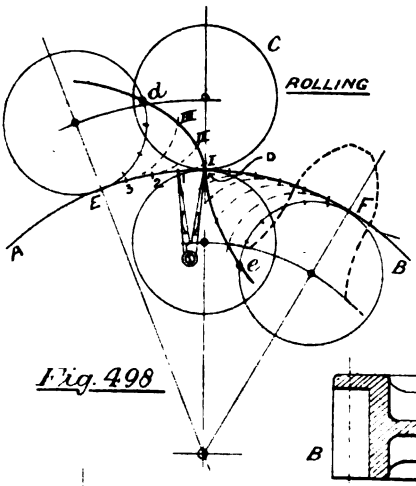

Fig. 498

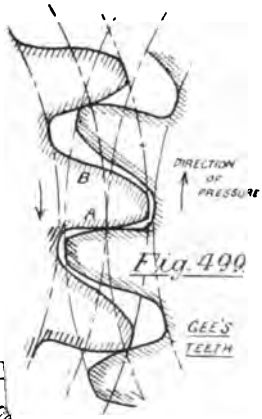

Fig. 499

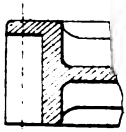

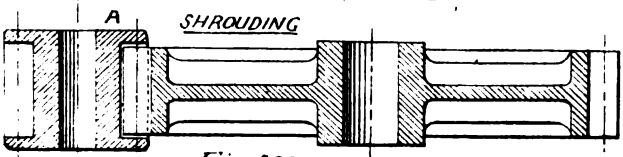

Fig. 500

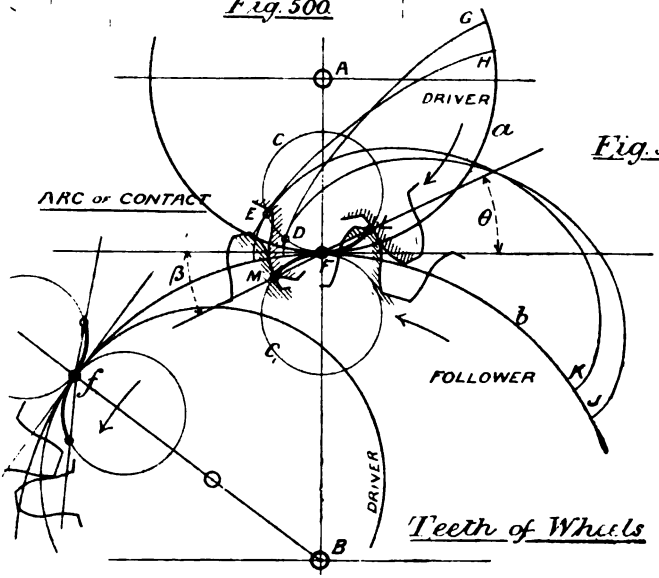

Fig. 501

Teeth of Wheels

Digitized by Google

be no pressure in direction A B, the latter depending on the difference of β and the friction angle. Drawing the teeth in position at first and last contact, their paths on their respective pitch lines define the *arc of action*, which should be long enough to engage two pairs of teeth at once, and avoid jerks. (*See Appendix I.*)

Internal or annular wheels are examined in the same manner. The obliquity is somewhat greater on the inside, as at *f*, Fig. 501, and the curves are reversed for the wheel, an epi-cycloid forming the root and a hypo-cycloid the point. Tooth point is sometimes called *addendum*, and *flank* used instead of 'root.'

Proportions of Wheel-teeth, as at present adopted, are given in Fig. 502. It is now proposed that they should be somewhat decreased in height, but the objection then is that fewer than two pairs of teeth *may* only be in contact. The pitch p'' should always be measured along the curve of the pitch line. The difference $(\cdot52 - \cdot48)p''$ is termed *backlash*, and $(\cdot4 - \cdot3)p''$ is called *clearance*. The former is sometimes eliminated entirely, as in sighting gear for turret guns.

Example 49. — Determine the arc of action, and the greatest obliquity of the line of action, in a pair of cycloidal teeth. State also how many teeth are in gear at once when $p'' = 2''$; T = 30 and 50; dia. of rolling circle = $8\frac{3}{4}''$; height of points or addenda = $\frac{5}{8}''$. (Hons. Mach. Constr. Ex., 1892.)

Fig. 503 is drawn to scale. The arc of contact is from *a* to *b*, and the

arcs of action are shown by radial bounding lines.

Greatest obliquity = $13\frac{1}{2}°$.

There are three pairs of teeth in gear at once.

The latter is found by stepping the pitch into the arc of action. Then number of teeth in gear = no. of *integral* pitches + 1.

Strength of Teeth.—The first datum required is the pressure on the teeth.

Example 50.—A crab is required to raise $\frac{1}{2}$ a ton by the strength of one man; 30 lbs. on a 15" handle. Sketch the gearing and chain barrel, pinion having 12 teeth of $1\frac{1}{4}$ ins. pitch, and chain barrel being $7\frac{1}{2}''$ dia. Find also pressure on wheel teeth. (Hons. Mach. Constr. Ex., 1882.)

Digitized by Google

Let x = No. of teeth in wheel.

By loads $\frac{W}{P} = \frac{1120}{30}$

By gearing $\frac{W}{P} = \frac{x \times 30}{12 \times 7{\cdot}5}$ $\therefore x = \frac{1120 \times 12 \times 7{\cdot}5}{30 \times 30} = 112$ teeth.

Dia. of toothed wheel $= \frac{\text{No. of teeth} \times \text{pitch}}{\pi}$

$\therefore \frac{12 \times 1{\cdot}25 \times 7}{22} = 4{\cdot}7''$ dia. of pinion.

and $\frac{112 \times 1{\cdot}25 \times 7}{22} = 44{\cdot}5''$ dia. of wheel

Then by moments, $\frac{30 \times 15}{2{\cdot}35} = 191$ lbs. pressure on teeth

and the drawing is given in Fig. 504.

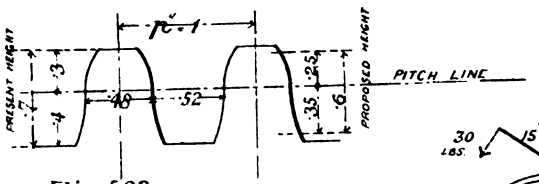

Fig. 502

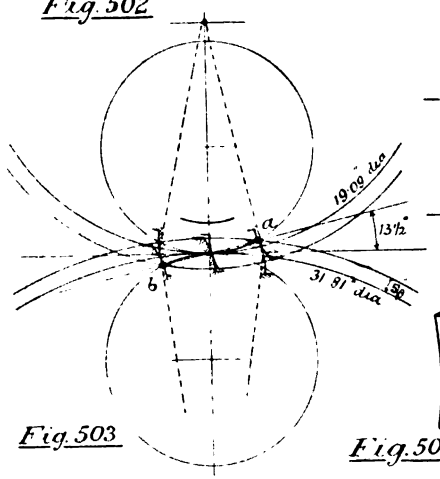

Fig. 503

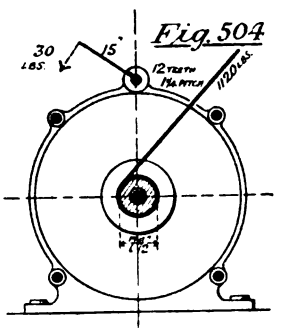

Fig. 504

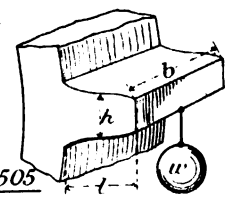

Fig. 505

Assuming a possible pitch, the tooth is reckoned as a cantilever with concentrated load, as at Fig. 505. Breadth b varies some-

Digitized by Google

what in different cases, but $2\frac{1}{2}\,p''$ is a good working value, and h is measured at the pitch line. If one tooth bears the whole pressure and $l = \cdot 7p''$; $h = \cdot 48p''$: $b = 2\frac{1}{2}p''$; $f_o = 2\frac{1}{2}$ tons for cast iron ($f_o = .1$ ton or less where much shock). Then:

$$\text{Safe load on cast iron teeth.} = \frac{f_o\,bh^2}{6l} = \frac{2\cdot 5 \times 2\cdot 5p \times \cdot 48p \times \cdot 48p}{6 \times \cdot 7p} = \cdot 32p^2 \text{ tons}$$

Load may also be estimated in terms of the H.P. transmitted. Thus:

$$\frac{w \times 2\pi\,R\,N}{33000} = \text{H.P.} \quad \text{and} \quad W = \frac{2\cdot 34\ \text{H.P.}}{R\,N} \text{ tons}$$

$$\text{But } R = \frac{p''\,T}{2\pi} \qquad \therefore \text{ Load on tooth} = 14\cdot 74\frac{\text{H.P.}}{p''\,T\,N} \text{ tons.}$$

Example 51.—A C. I. toothed wheel 18″ dia. makes 150 revs. per m., transmitting 30 H.P. Find pressure on teeth, and pitch when width is 2″. (Eng. Ex., 1892.)

$$\text{Pressure on teeth} = \frac{2\cdot 34 \times 30}{\cdot 75 \times 150} = \cdot 624 \text{ ton}$$

$$\text{Safe load} = \frac{f_o \times 2'' \times (\cdot 48p)^2}{6 \times \cdot 7p} = \cdot 274\,p \text{ tons}$$

$$\therefore \cdot 256p = \cdot 624 \quad \text{and pitch} = 2\cdot 27''$$

Example 52.—A spur wheel 2″ pitch and 4″ face transmits 30 H.P. with pitch line velocity of 10 ft. per sec. Find H.P. transmitted by a wheel of 4″ pitch and 8″ face, the velocity being 3 ft. per sec. (Hons. Mach. Constr. Ex., 1881.)

$$w = \frac{f_o\,bh^2}{6l} = \frac{f_o\,b\,(\cdot 48p)^2}{6 \times \cdot 7p} = \cdot 055\,f_o\,bp'$$

$$\text{H.P.} = \frac{w \times 60v}{33000} = \frac{\cdot 055\,f_o bp \times 60v}{33000} = \cdot 00005\,f_o\,bp''v$$

$$\therefore \text{H.P.} \propto bp''v$$

(1) $30 \propto 4 \times 2 \times 10 = 80$

(2) $\text{H.P.} \propto 8 \times 4 \times 3 = 96$

$80 : 30 :: 96 : \text{H.P.}$ and H.P. $= 36$

Digitized by Google

Summing up, spur gearing is designed as follows:—

(1.) Fix diameters to give advantage desired, keeping ratio of each pair of wheels below 8 : 1.

(2.) Calculate pressure on teeth.

(3.) Decide on pitch, which should give *at least* 15 teeth in pinion, and let tooth strength meet (2).

(4.) Roll the teeth, choosing the circle to avoid weak root or great obliquity.

[Quite the easiest way of rolling is to draw the circle C (Fig. 498) upon tracing paper, and, placing it to touch both at D and 1, put a pin at 1; then turning the circle on centre 1 till it touches both 1 and 2, prick through at I. Moving the pin to 2, C may be further rolled and II pricked through, and so on till *d* be reached.]

(5.) Mark off teeth proportions according to Fig. 502.

(*See Appendix II.*)

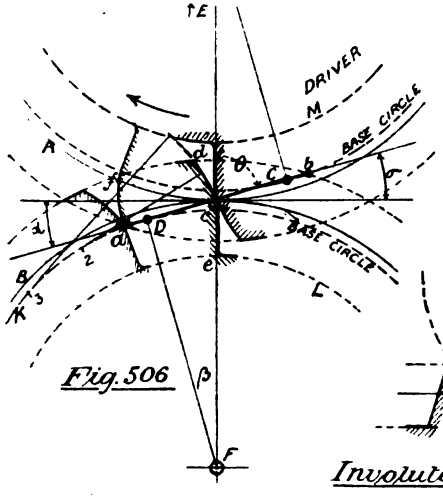

Fig. 506

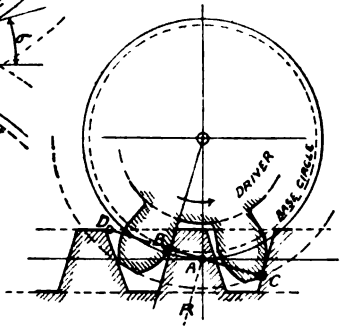

Fig. 507

Involute Teeth.

Involute Teeth possess the advantage that their wheel centres may be placed slightly nearer or further apart without disturbing the accuracy of contact. The obliquity is, however, greater than for cycloidal teeth. Fig. 506 shows the method of drawing the curves. Draw two circles C and D whose radii are

Digitized by Google

each ·968 of their respective pitch circles: their tangent C D is the path of contact, the obliquity being $15\frac{1}{2}°$ throughout contact, and $\alpha = \sigma$. Strike tooth-point circles cutting tangent at *b* the commencement, and at *a* the end of contact. If now a string be fastened at K, say, and a pencil attached to its other end *c*, the unwinding of K *c* will cause the pencil to describe the curve *c d* and *c a* K = *d* K. The curve is best found by drawing a line on tracing-paper and 'rolling' it round *c a* K without slipping.

Internal teeth are similarly drawn, but the rack, Fig. 507, has a base circle of infinite radius R, so the teeth curves are straight lines whose angle to line of centres $= \alpha = \sigma = \beta$.

Safe Velocity of Toothed Gearing, at pitch line, varies from 1800 to 3000 or 4000 ft. per m., the former for rough cast iron, and the latter for machine-cut wheels.

Mortice Teeth, Fig. 508, are now little employed. They were introduced to decrease noise and jar, the teeth being of wood in one wheel, while the fellow wheel has iron teeth roughly filed up.

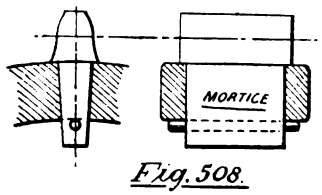

Fig. 508.

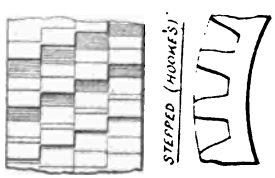

Fig. 509.

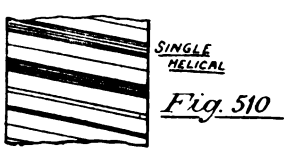

Fig. 510.

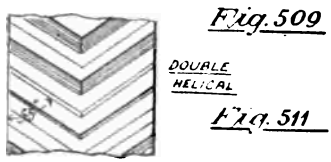

Fig. 511.

Helical Teeth, &c.—The smoothest action being observed to occur when a very small pitch was used, Dr. Hooke invented his *stepped gearing* as in Fig. 509, to obtain strength and smooth action at once. These were changed later to the form at Fig. 510, for facility in casting and cutting, and recently the *double-helical* teeth in Fig. 511 have been adopted to avoid endlong pressure on the bearings caused by single-helical teeth. They

Digitized by Google

are machine-moulded by two half-patterns, and work smoothly if well formed; being said to be stronger than ordinary teeth, which is doubtful.

(4.) **Bevel Gearing** connects shafts whose directions meet at any angle. Their ideal form is that of the frustra of cones, as A and B, Fig. 512, having a common vertex, as C. The pitch diameters are measured at d_1, d_2.

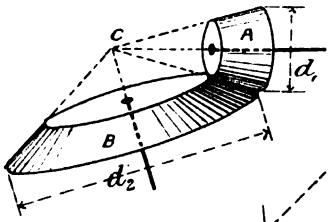

Fig. 512

Fig. 513

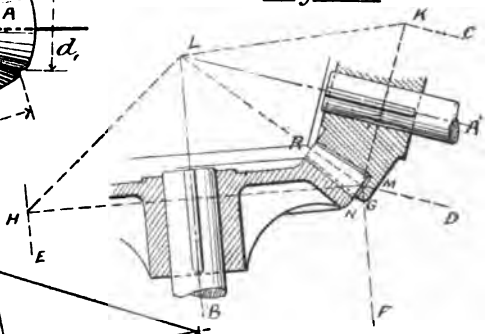

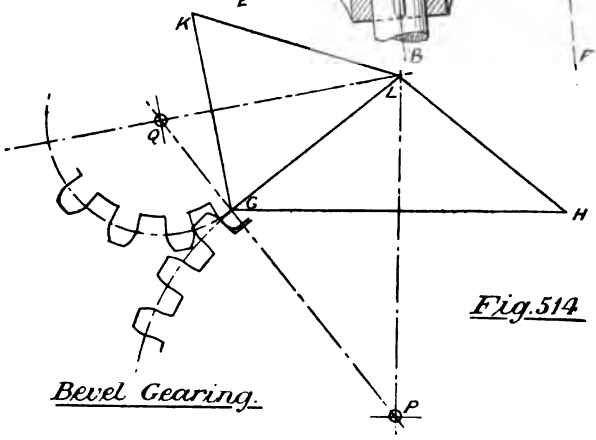

Fig. 514

Bevel Gearing.

Two shafts A and B, Fig. 513, are to be connected so that their revolutions shall be as 2 : 1. Assume any convenient diameter C D and draw C K and D M ‖ to A L. Taking E F = 2 C D, draw E H and F G ‖ to B L. Through G draw G H at right angles to B L, and G K at right angles to A L: then join H, G, and K to I..

Digitized by Google

Upon these cones the teeth are formed, their top and sides radiating from L.

Equal bevel wheels with shafts at right angles are termed *mitre wheels.*

Bevel-wheel Teeth are set out as in Fig. 514. K G H being the cones, draw Q P at right angles to G L, and with centres P and Q strike arcs, upon which the teeth are to be designed as though they were spur wheels. But although the teeth are struck at G their strength must be reckoned at R, for there the teeth are weaker in proportion to load than at G. Refer also to pp. 62 and 255.

(5.) **Worm Gearing** gives large mechanical advantage with few parts. Friction, however, causes considerable loss unless the gear be exceedingly well made. The methods of practical construction are given at pp. 58 and 274, the latter being of course preferable. In common with other gear giving high velocity ratio with few parts, *e.g.*, Weston block, &c., worm gear possesses the property of non-reversibility; the wheel will not drive the worm unless the pitch be excessive. The reason is that the direction of pressure is within the friction angle and W is placed at a disadvantage.

$$\text{Mech. Adv.} \frac{W}{P} = \frac{\text{No. of threads in worm wheel}}{\text{No. of threads in worm}}$$

Usually the denominator is unity. Plate VII. and Fig. 219 give good examples. For the latter:

$$\text{Total Mech. Adv. neglecting friction} = \text{Adv. of worm} \times \text{Adv. of screw}$$

$$= \frac{16}{1} \times \frac{2 \times 22 \times 14}{7 \times 1{\cdot}25} = \frac{1126.4}{1}$$

$$\therefore \text{Man's pull on handle when 10 tons are on jack} = P = \frac{W}{1126{\cdot}4} = \frac{10 \times 2240}{1126{\cdot}4} = \underline{\text{20 lbs. nearly.}}$$

(*See Appendix IV.*)

Fig. 515 shows the forms of teeth, B being the best, though A serves well enough for light pressures.

Screw Gear is used to connect shafts that do not intersect, when moderate ratios are required. It is really exaggerated worm

Digitized by Google

gear, with so many threads to the worm that it becomes a wheel. Fig. 516 shows its application in a Multiple Drill where A A are the drivers, and B B follow on the drill spindles D D. The wheels are here equal, and the teeth are inclined at 45° to the axis.

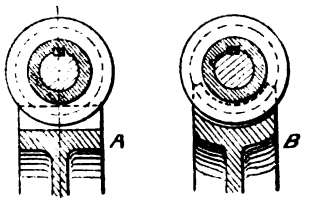

Worm Gearing.
Fig. 515

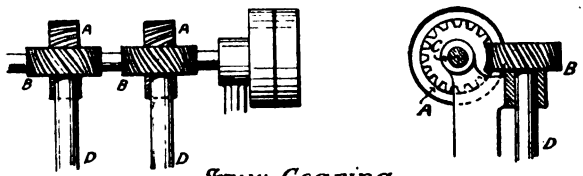

Screw Gearing.
Fig. 516.

Epicyclic Wheel Trains, like worm gear, produce a high ratio with few parts. Kinematically they are ordinary trains where one wheel is the fixed link.

Case I.—Fig. 517. Let A and L be in gear, with A L fixed. If A make a minus rev. with relation to A L, L will have made $\frac{A}{L}$ plus revs., because $\frac{A}{L}$ is the ratio of the train. Next fix A and put L out of gear. If now arm A L make one plus rotation two things have happened: A has made one minus rev. relatively to A L, and L has made one plus rev. relatively to A. Finally, put A and L in gear, and give A L one plus rotation. L receives two motions: *one* plus rev. due to its connection with A L, and $\frac{A}{L}$ plus revs. due to the relative minus turn of A —— both relatively to A, and

$$\text{L's revs.} = 1 + \frac{A}{L}$$

Digitized by Google

Case II.—Fig. 518. The only alteration is the direction of L's motion due to A's minus turn, which is now reversed, so that

$$\text{L's revs.} = 1 - \frac{A}{L}$$

A special case is when A = L, and L's revs. = 0, the upright arrow shown preserving its vertical position.

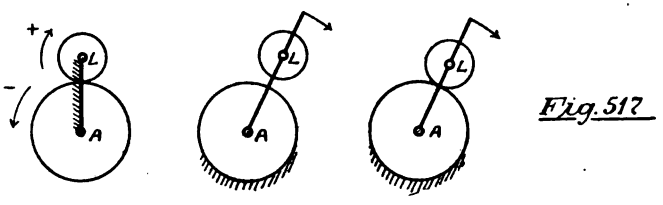

Fig. 517

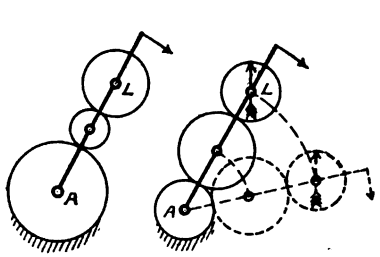

Fig. 518

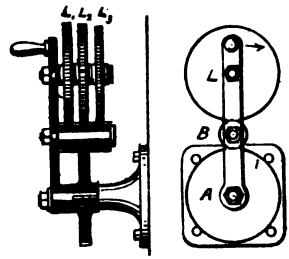

Fig. 519

In Fig. 519 Ferguson's paradox illustrates Case II., giving three different motions on one axis. Here L_2 has equal teeth with A, L_1 has one tooth more, and L_3 one less. Therefore

$$L_1\text{'s revs.} = 1 - \frac{A}{A+1} \quad \text{and are plus.}$$

$$L_2\text{'s revs.} = 1 - \frac{A}{A} \quad \text{and are nothing.}$$

$$L_3\text{'s revs.} = 1 - \frac{A}{A-1} \quad \text{and are minus.}$$

Case III.—Fig. 52c. Let A and L be equal. Then, by formula :

$$\text{L's revs.} = 1 + \frac{1}{1} = 2$$

Digitized by Google

relatively to A. We may vary the experiment by carrying A round L, but so that A *does not revolve;* then the relative positions will still be the same, as shown by a comparison of the figures, and L will again make two revolutions while A is carried once round it.

Watt's sun and planet gear, Fig. 521, is a practical example. A slight deviation from the rigid vertical occurs at *c* and *d*, but the total result remains; S makes two revs. for one rev. of the crank.

Case IV.—A *Reverted Train* is where A and L turn on the same axis. In Fig. 522, A is fixed and L reverted, while *a b c l* shows the train in direct order.

$$\text{The train ratio is } \frac{a \times c}{b \times l} \text{ and}$$

$$l\text{'s revs.} = 1 - \frac{a \times c}{b \times l}$$

If A and L are nearly equal, we may obtain a very slow relative rotation, as in Fowler's first coiling gear, Fig. 523. Stud D supports the drum and gear, A is the fixed wheel, and a difference of about one tooth in 40 between A and L causes the latter to turn very slowly, rotating the cam E, and raising or lowering the coiling lever and guide pullies as required.

Fig. 524 has an annular wheel, but is otherwise like Case II. Opening out the train, it is found that while *l*'s revs. are minus, those of L are plus, so

$$\text{L's revs.} = 1 + \frac{A}{L}$$

Its application is shown to a ship's capstan; and

$$\text{Vel. Ratio} = \frac{\text{L's revs.}}{1} \times \frac{\text{lever arm}}{\text{barrel rad.}}$$

D being inserted for steadiment.

Moore's Pulley Block, Fig. 525, is a reverted train with annular wheels. Referring to the lower diagrams, the train ratio is $\frac{a \times c}{b \times b}$ and a minus rotation is induced in *l* or L by the relative motion of *a* or A

$$\therefore \text{ L's revs.} = 1 - \frac{A \times C}{B \times L}$$

Digitized by Google

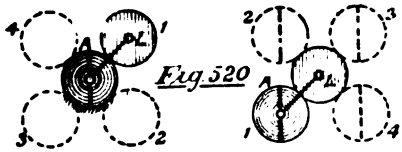

Fig. 520

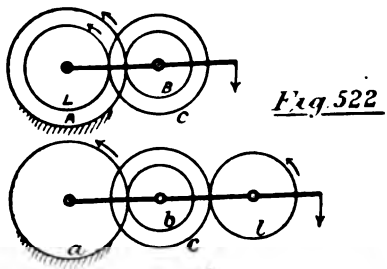

Fig. 522

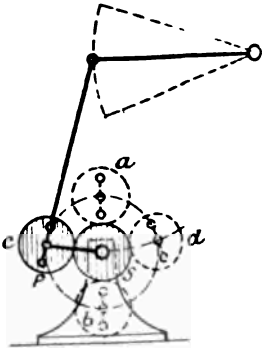

Fig. 521

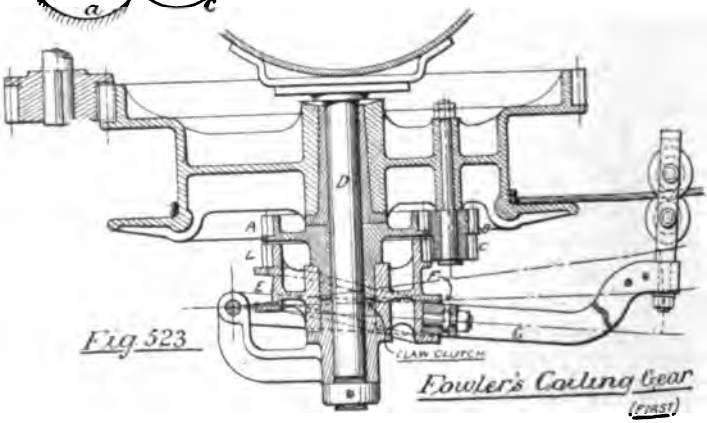

Fig. 523

Fowler's Coiling Gear (FIRST)

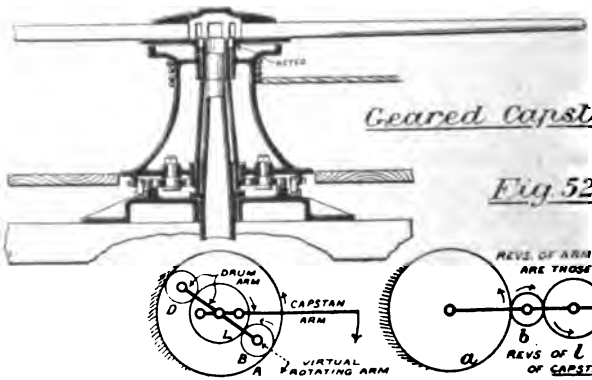

Geared Capstan.

Fig. 524.

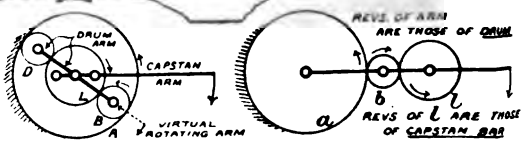

Digitized by Google

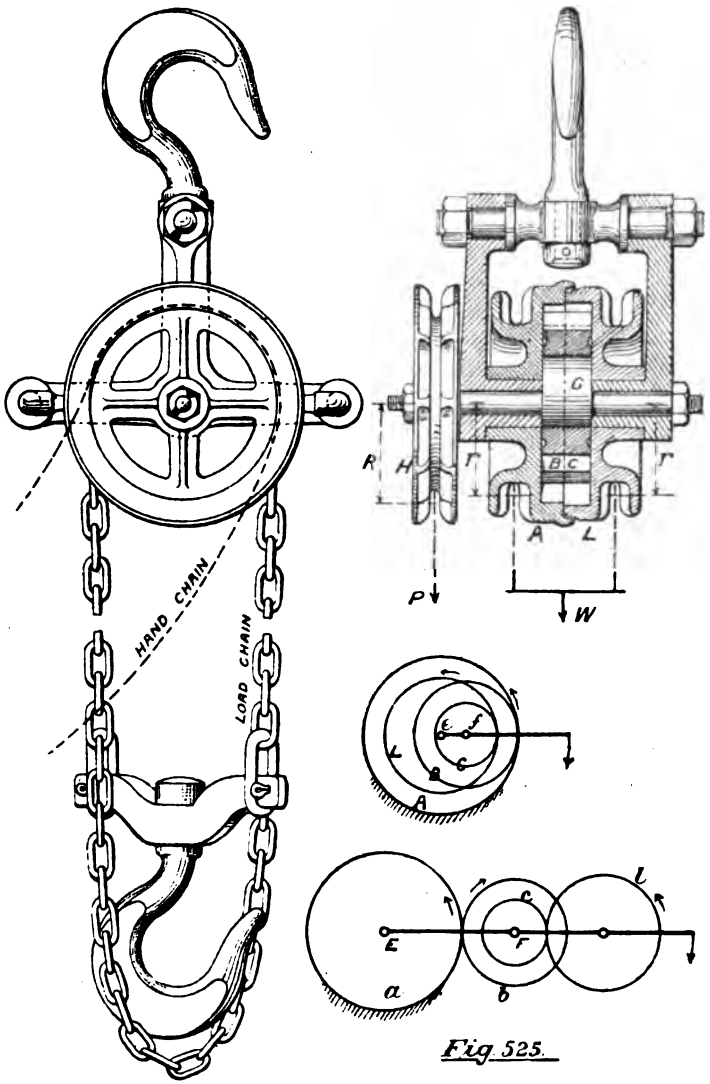

Fig 525.

Moore's Differential Pulley Block

Digitized by Google

If A and L are nearly equal, we have a high velocity ratio. In the block, the eccentric G, corresponding to crank *ef*, is rotated by hand chain round H, so that A and L are turned oppositely, each by half their relative motion, and W's rise is due to this. Then

$$\text{P's distance} = 2\pi R$$

$$\text{W's distance} = \frac{2\pi r \times \text{L's revs.}}{2}$$

$$\text{and Vel. Ratio} = \frac{\text{P's dist.}}{\text{W's dist.}} = \frac{2R}{r \times \text{L's revs.}}$$

In the example B C has 14, A 15, and L 16 teeth. If R = 7

$$\text{Vel. Ratio} = \frac{2}{1 - \frac{15 \times 14}{14 \times 16}} = 32 : 1$$

Another reverted train is obtained by bevel wheels, as in Fig. 526, being applied as driving gear to traction engines and tricycles. B is the arm, and A, L the first and last wheels respectively. When the front road wheel is steered ahead, A, B, and L are practically locked, and the two hind road wheels move with equal velocities; but if the front wheel be steered, say, to the left, A becomes fixed and L revolves at double speed, thus steering the engine in a much smaller curve. Fig. 527 shows a detailed section through the hind axle.

Fig. 528 is a disguised form of sun and planet motion, where L is annular and the slider-crank chain is employed. Considering A fixed, as in Fig. 520,

$$\text{L's revs.} = 1 - \frac{A}{L}$$

If A and L are nearly equal, a slow movement of L is obtained, as in Fowler's second coiling gear, Fig. 529. Eccentric B serves as crank, and D as connecting rod; A and L have the same meaning as in Fig. 528, and the cam and lever are as previously described.

(6.) **Belt Gearing** has the disadvantage of slip, but is practically noiseless, and will transmit power a considerable distance (say 30 ft.) without intermediate support.

Digitized by Google

Tension of Belts.—In the first place there must of necessity be a *tight* and a *slack* side, whose relative tensions we will investigate.

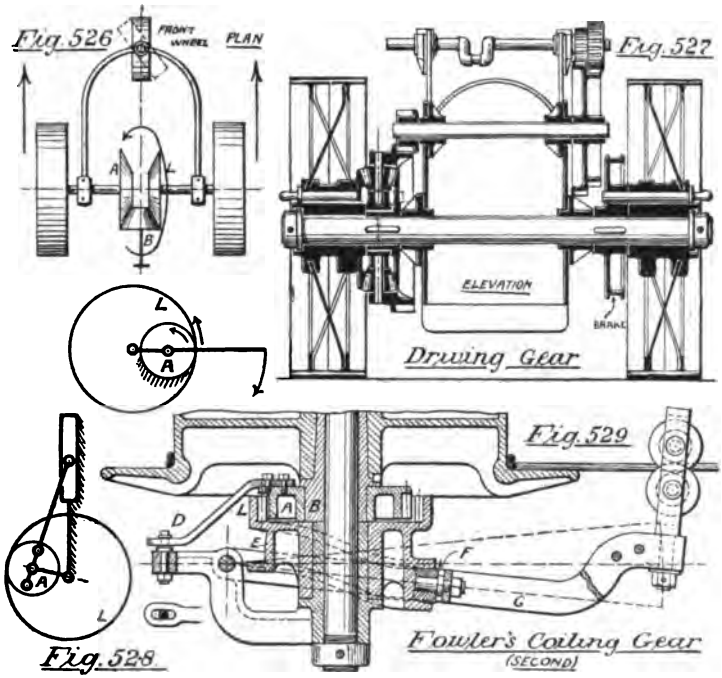

In Fig. 530 the belt embraces an angle θ, which is $\frac{l}{r}$ in circular measure. Considering a small angle σ, the greatest tension without slipping being T_n and the lesser tension t_1, these forces are balanced by reaction R, inclined to radius by the friction angle ϕ. Drawing $a\ b$ perpendicular to R forms the force diagram A b a, where A a = tension T_n, A b = tension t_2, and $a\ b$ = reaction R, and if the construction be followed through angles σ_1 σ_2 σ_3 σ_4 and σ_5 the final tension t_n is found for the slack side of belt. Curve $a\ d\ g$ is a logarithmic spiral, whose tangents

Digitized by Google

make a constant angle with the radii, and if the angles σ are taken small, the construction is fairly correct. But greater accuracy is secured by using the equation to the curve,

$\frac{T_n}{t_n} = \epsilon^{\mu\theta}$ where $\epsilon = 2{\cdot}718$, the base of Napieran logarithms.

More usefully the formula becomes

$$\text{Log.}\left(\frac{T_n}{t_n}\right) = {\cdot}4343\ \mu\frac{l}{r} \quad \textit{(See Appendix II.)}$$

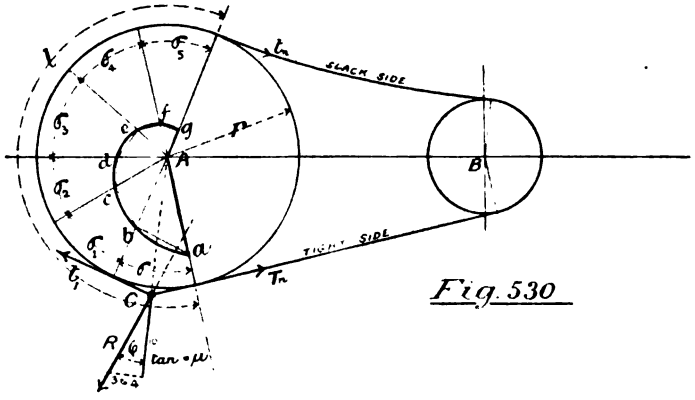

Fig. 530

Then, the log. being known, the corresponding number is found from a table, and the formula used for any value of $\frac{l}{r}$, *even beyond* 360°.

COEFFICIENT OF FRICTION (μ) IN TENSION ELEMENTS.

Leather belting on iron pulleys.....	·3 to ·4	·15 if oily.
Wire rope on iron pulleys	·15	not accounting for wedge action
Wire rope on leather-bottomed pulleys	25	
Hemp rope on iron pulleys	·28 to ·18	

Digitized by Google

TABLE OF LOGARITHMS OF $\frac{T_n}{t_n}$.

$\frac{T_n}{t_n}$	Log	$\frac{T_n}{t_n}$	Log	$\frac{T_n}{t_n}$	Log
$1\frac{1}{4}$	·09691	$3\frac{1}{2}$	·54407	$5\frac{3}{4}$	·75966
$1\frac{1}{2}$	·17609	$3\frac{3}{4}$	·57403	6	·77815
$1\frac{3}{4}$	·24303	4	·60206	$6\frac{1}{4}$	·79588
2	·30103	$4\frac{1}{4}$	·62840	$6\frac{1}{2}$	·81291
$2\frac{1}{4}$	·35218	$4\frac{1}{2}$	·65321	$6\frac{3}{4}$	·82930
$2\frac{1}{2}$	·39794	$4\frac{3}{4}$	·67670	7	·84509
$2\frac{3}{4}$	·43933	5	·69897	10	1·00000
3	·47712	$5\frac{1}{4}$	·72016	100	2·00000
$3\frac{1}{4}$	·51188	$5\frac{1}{2}$	·74036	300	2·47712

Driving Pull and H. P.—If two weights are slung over a pulley, as in Fig. 531, the pull on the rim of the latter will be due

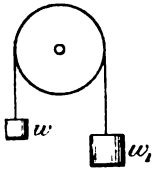

Fig. 531.

to their difference, $w_1 - w$, and as this is the same case as a driving belt,

$$\text{Driving pull} = T_n - t_n$$

$$\text{and H. P. transmitted} = \frac{(T_n - t_n)\,V}{33000}$$

$$\text{But } V = 2\pi R N \qquad \therefore \text{ H. P.} = \frac{(T_n - t_n)\,2\pi R N}{33000}$$

Strength of Belting, allowing for the joint, may be taken, so that

$$f^{\text{lbs}}\,(\text{safe}) = 320 \text{ lbs. per sq. in.}$$

and the thickness varies from $\frac{3}{16}''$ to $\frac{3}{8}''$ in single-ply belts. The width must be made sufficient to meet T_n.

Digitized by Google

Example 53.—A leather belt is to transmit 2 H.P. from a pulley 12″ diameter on a shaft making 160 revs. per m. Find (1) the tensions, when the belt embraces half the pulley rim, and $\mu = \cdot 3$: (2) the belt width when the leather is $\frac{1}{4}$″ thick.

$$(1)\ \text{Log.}\frac{T_n}{t_n} = \cdot 4343 \times \cdot 3 \times \frac{22}{7} = \cdot 40905 \qquad \therefore \frac{T_n}{t_n} = \frac{2\frac{1}{2}}{1}$$

$$\text{H.P.} = \frac{(T_n - t_n)\, 2\pi\, R\, N}{33000} \quad \text{and } T_n - t_n = \frac{2 \times 33000 \times 7}{2 \times 22 \times \cdot 5 \times 160} = 131 \text{ lbs.}$$

There are two values of T_n, viz., $(t_n + 131)$ and $(2 \cdot 5\ t_n)$.

$\therefore 2 \cdot 5\ t_n = t_n + 131$; $\underline{t_n = 87 \cdot 3 \text{ lbs.}}$ and $\underline{T_n = 218 \cdot 3 \text{ lbs.}}$

(2) $w'' \times \cdot 25 \times 320 = T_n = 218 \cdot 3 \qquad \therefore \underline{w'' = 2\frac{3}{4}''}$

Tension in Belt due to Centrifugal Force may be examined similarly to the fly wheel at Fig 353. The weight of a cubic inch of leather (w) is ·0358 lbs., and the stress per square inch becomes

$$\frac{12\, w v^2}{g} \text{ lbs.}$$

$$\therefore \text{Total tension on tight side} = T_n + \frac{\cdot 43\ w\, t''\, v^2}{g}$$

which is the total force the belt must resist at high speeds.

Creep, Slip, and Speed.—As the belt tension changes from T_n to t_n, a small retrograde movement or creep occurs due to release of tension, causing the follower to revolve at a slightly decreased rate. The result is known as slip, and represents a loss of about 2 per cent. The speed of belting should not exceed 3000 to 4000 feet per m.

Length of Belt (Figs. 532 and 533) —The length between centres c should not be less than 6 times D if much power is transmitted, though much less is used with light pressures. It may be as much as 30 feet. Horizontal belts give better results than vertical ones, and some inclination should always be given upright belts if possible. Taking the *open belt*, Fig. 532,

$$l_1 = \sqrt{\left(\frac{D-d}{2}\right)^2 + c^2} \quad ; \quad l_2 = \frac{\pi D}{2} \quad ; \quad l_3 = \frac{\pi d}{2}$$

and Total length of belt $= 2l_1 + l_2 + l_3$

Digitized by Google

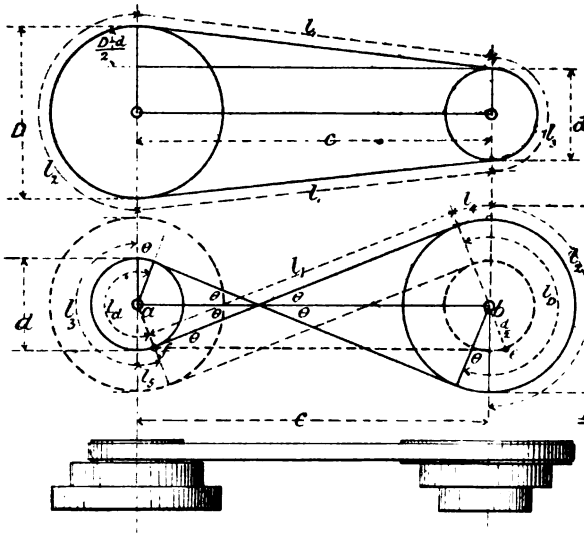

Fig. 532.

Fig. 533.

Length of Belts

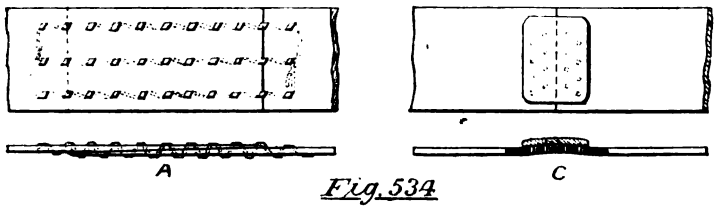

Fig. 534

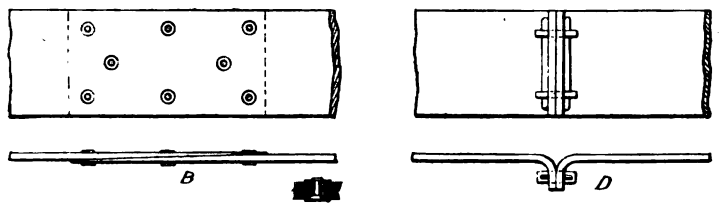

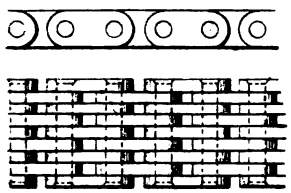

Fig. 535

Details of Belting

Digitized by Google

In the *crossed belt*, Fig. 533, draw af, be at right angles to l_1, and $f_e \parallel ab$. The various angles θ are equal, and

$$\sin\theta = \frac{\frac{D}{2}+\frac{d}{2}}{c} = \frac{D+d}{2c} \text{ from which } \theta \text{ may be found.}$$

Then $l_1 = c \cdot \cos.\theta$; $l_2 = \frac{\pi D}{2}$; $l_3 = \frac{\pi d}{2}$; $l_4 = \frac{\theta}{360} \times \pi D$

$$l_5 = \frac{\theta}{360} \times \pi d$$

and Total length of belt $= 2l_1 + l_2 + l_3 + 2l_4 + 2l_5$

If $D+d$ be constant throughout the pairs of cones, a crossed belt will fit equally well on any pair. Thus in Fig. 533, when the belt is changed to the dotted pulleys, l_1 has a constant value, and as circumferences vary as radii, the sum of the embraced arcs will also be constant. This is not exactly true for an open belt, but may be safely reckoned on in practice. The diameters should always be measured to centre of belt thickness.

Belt Fastenings.—The common methods of connecting the ends of leather belts is by lacing (A) or copper riveting (B), Fig. 534. There are, however, many convenient metal fastenings, as Harris's, at C, being a spiked plate having the points burred over after connection; and Lagrelle's, at D, where the belt is first bent over. The belt being laid on the pullies and tightly stretched, has the length marked, and the joint made while lying round the shafts: the belt is then placed upon one pulley, and gradually drawn on to the other by tying it to the rim and slowly rotating the latter. Large belts must be stretched by means of clamps. Tullis's chain belting, Fig. 535, has 25% more grip by using the edge of the leather, but the method is expensive.

Advancing and Retreating Sides.—Let A, Fig. 536, be a pulley whose belt enters at B and leaves at C: it will remain on the pullies while *exactly* at right angles to the shaft, as at D. If, however, the advancing side be deviated as at E, the belt will slip off to the left, but the retreating side may be deflected, as at F, without any harm. In a *curved pulley*, Fig. 537, the belt will ride on the large diameter with safety, for if placed at A, the pull causes a deviation which moves the belt to the right, if at C the

Digitized by Google

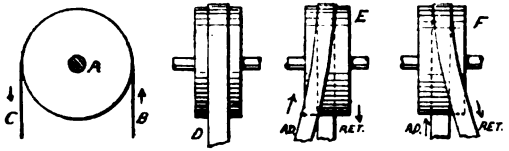

Fig. 536.

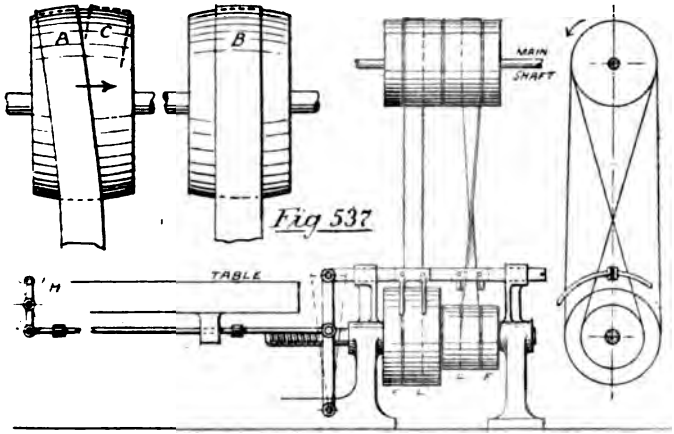

Fig 537

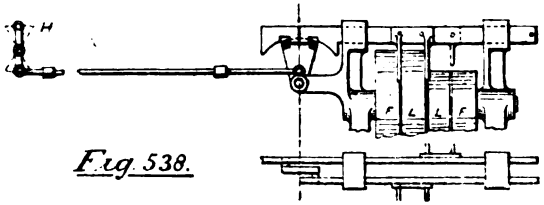

Fig. 538.

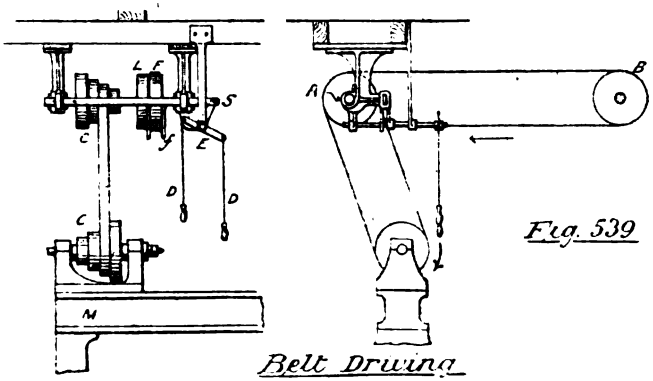

Fig. 539

Belt Driving

Digitized by Google

movement is leftward, and the final position is that at B. The radius of curvature should be three to five times the pulley width.

Countershafting and Speed Cones.—Fig. 539 shows how a shop machine M may be driven so as to be started and stopped without affecting the main shaft revolutions or removing the speed cone belt C C. B is the main shaft and A the countershaft, the latter having fast and loose pulleys L and F. The fork *f* on the striking bar S then grasps the advancing side of the belt, and is moved to right or left by pulling the handles D, which act on the belt crank L.

Quick return is obtained by the belting at Fig. 538. An open strap turns the advancing, and a crossed strap the returning pulley, and in each case there is a narrow fast pulley and a broad loose pulley. The fork is shifted automatically at either end of stroke, and the machine stopped by placing both belts in position shown, from the handle H. The total width of pullies may be reduced to four times belt width by the arrangement shown below, where two striking bars are employed with which the black tappets only engage at certain times. Many belt examples will be found in Part I.

Problems in Belt Driving.—The more difficult cases are solved in Fig. 540, and will be understood if it be remembered that the advancing side of the belt must lie at right angles to the shaft, while the retreating side may make any deviation.

Pullies for Belt Driving are usually split, for convenience in fixing. Fig. 541 shows the construction of a cast iron, and Fig. 542 of a wrought iron pulley. The former should have curved arms if more than 12″ diameter (see p. 67), and the latter is adopted for lightness with high speeds or large pullies. Fig. 543 shows a section through a pair of fast and loose countershaft pullies, which need not be split.

(7.) **Cotton-Rope Gearing** is much in favour for spinning and weaving mills, and has been successfully applied to travelling cranes and dynamo driving. For mills, the flywheel rim has the section shown in Fig. 544, and the ropes lie in wedge grooves.

With a flat pulley the resistance to slip would be $P\mu$, but in the grooved pulley shown the resistance is 2 $R\mu$, there being two

Digitized by Google

friction surfaces. The grip is greater in the second than the first case in the ratio $\frac{2R}{P}$: 1. From the force diagram, $\frac{2R}{P}$ = cosec. $22\frac{1}{2}^\circ$ = 2·6131, and $\mu\frac{2R}{P}$ = ·28 × 2·6131 = ·732, which should be substituted for μ in the tension formula already given.

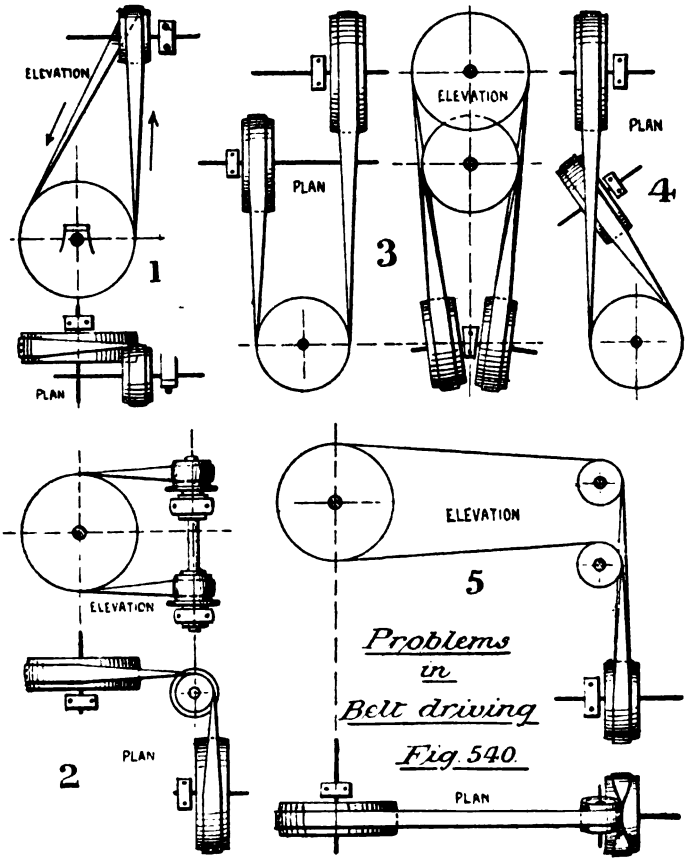

Messrs. Jno. Musgrave and Sons, of Bolton, have fitted up a large number of mills with cotton-rope driving, and the following remarks and tables are the result of their experience as given in

Digitized by Google

their treatise. Hemp and Manilla ropes do not wear so well as cotton, or transmit as much force. If the pullies be large and the rope as small as possible, to prevent disintegration of fibre by

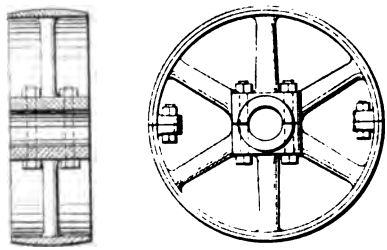

Fig 541

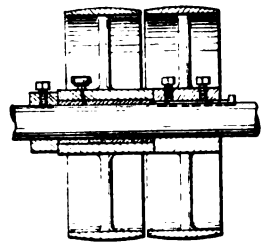

Fig 543

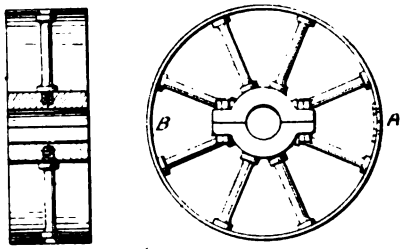

Fig 542

Belt Pullies

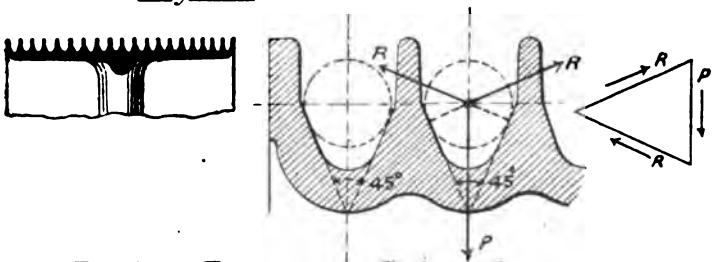

Fig 544 Pulley for Cotton Rope.

bending, the life of a cotton rope may be twelve years in good hands, and has even reached seventeen years while still in good order. Taking the area of circumscribing circle, the breaking stress is 4 tons per sq. in., but a factor of 30 being adopted, 300 lbs. per sq. in. is the safe load; or about the same as leather belting.

Digitized by Google

DATA FOR COTTON ROPES, WHEN V = 4700 FT. PER M.
(Messrs. MUSGRAVE.)

Dia. of rope.	Area of circle.	Weight per foot.	$(T_n - t_n) \frac{12\,wv^2}{g}$	Centrifugal stress $\frac{12\,wv^2}{g}$	Effective tension $(T_n - t_n)$	H. P. transmitted.	Centres pulley grooves.	Dia. of smallest pulley.
ins.	sq. ins.	lbs.	lbs.	lbs.	lbs.		ins.	ins.
$\frac{1}{2}$	·1963	·081	47	16	31	4·43	$\frac{7}{8}$	15
$\frac{5}{8}$	·3067	·125	72	24	48	6·84	1	18
$\frac{3}{4}$	·4417	·184	106	35	71	10·07	$1\frac{1}{8}$	22
$\frac{7}{8}$	·6013	·25	144	48	96	13·67	$1\frac{5}{16}$	26
1	·7854	·33	190	63	127	18·05	$1\frac{1}{2}$	30
$1\frac{1}{4}$	1·2272	·51	294	98	196	27·9	$1\frac{13}{16}$	37
$1\frac{1}{2}$	1·7671	·74	426	142	284	40·48	$2\frac{1}{8}$	45
$1\frac{3}{4}$	2·4053	1·00	576	192	384	54·7	$2\frac{1}{2}$	52
2	3·1416	1·30	750	250	500	71·10	$2\frac{3}{4}$	60

The centrifugal stress is *weight per foot* × $v^2 \div g$, and the fourth and sixth columns assume that $t_n = \cdot 2\ T_n$ which gives $T_n : t_n :: 5 : 1$. From the tension formula,

$$\text{Log. } 5 \text{ or } \cdot 69897 = \cdot 4343 \times (\mu \times 2\cdot 613) \times \frac{\cdot 55 \times 2 \times 22}{7}$$

$$\therefore \mu = \frac{4\cdot 893}{27\cdot 463} = \cdot 18$$

$1\frac{3}{4}''$ is the usual diameter for main rope.

Fig. 545 shows a spinning-mill driven by cotton ropes, the power being given to five floors by separate sets of ropes, a good arrangement in case of breakdown. The slack side being uppermost gives a large arc of contact. Fig. 546 shows a travelling crane. The rope is endless, passing round the pulleys D, H, A, G, F, and E in succession, and kept taut by the weight at H. Worm gear is used in taking off the power, at E for travelling, at B for lifting and lowering, and at C for cross-traversing; and either rope is put in gear by the press pullies *a*, *b*, actuated by hand levers P, Q. E is reversed by friction gear worked from handle L.

Digitized by Google

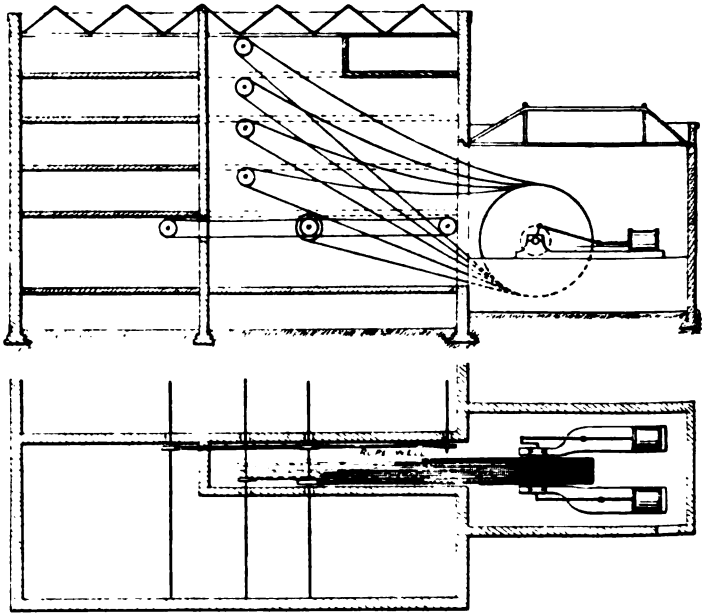

Mill driven by Cotton Ropes. Fig 545

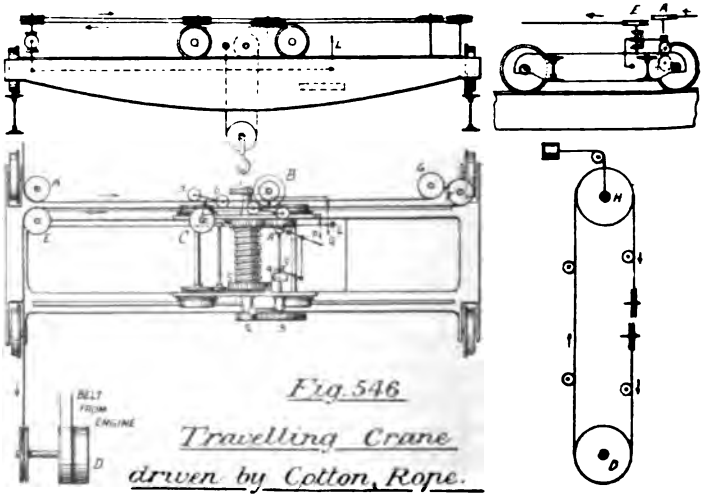

Fig 546

Travelling Crane driven by Cotton Rope.

Digitized by Google

It should be noted that horse-power, depending upon *pressure* × *speed*, may be obtained either by a large value of the one or other quantity. Thus cotton-rope driving depends upon a low pressure and high speed, but high-pressure driving will now be considered.

(8.) **Wire-Rope Gearing**, introduced by Hirn in 1851, and called by him 'telo-dynamic transmission,' has since been used in many long-distance cases, for example:

1. From turbines to distant mills.
2. For steam ploughing.
3. In collieries: both for hauling and raising.
4. For travelling cranes.
5. Funicular railways and cable tramways.
6. Boat towing on canals.

The rope is of steel wire, with hemp or steel core, and six strands of from 7 to 12 wires each. The wear is more uniform if the strands twist in the same direction as the rope, as in Lang's patent. The following table refers to the latter ropes:

Circumf. of rope.	Dia. of circle.	Breaking Stress.		Dia. of smallest sheave.	Construction.	
		Hemp Core.	Steel Core.		No. of strands.	Wires in each strand.
ins.	ins.	tons.	tons.	ins.		
4	$1\frac{1}{4}$	34	51	24	6	12
$3\frac{1}{2}$	$1\frac{1}{8}$	27	40	21	6	12
3	$\frac{15}{16}$	19	28	18	6	12
$2\frac{1}{2}$	$\frac{13}{16}$	14	21	12	6	12
$2\frac{1}{4}$	$\frac{3}{4}$	10	15	10	6	12
2	$\frac{5}{8}$	8	12	10	6	12
$1\frac{3}{4}$	$\frac{9}{16}$	6	9	8	6	10
$1\frac{1}{2}$	$\frac{1}{2}$	$4\frac{1}{2}$	$6\frac{1}{2}$	6	6	8

The wire core does not affect the safety of the rope in bending round pullies.

Digitized by Google

Pullies for Wire Rope.—The section is shown in Fig. 547, having a groove filled with leather on edge which is afterwards turned: μ then is ·25. Fowler's clip pulley, Fig. 548, has its rim divided into a series of toggles, the mere pull of the rope causing great grip, as shown at A. E is a huge screw on the pulley rim which permits adjustment, after which the bolts are re-inserted. The clip pulley has enabled wire rope to be applied in many cases hitherto unsolved. Fig. 549 shows a guide pulley.

At Fig. 550 a turbine (or horizontal water wheel) T_b drives a distant workshop. A B is termed a relay, which should not exceed 500 feet, and C C are guide pullies. Fig. 551 shows two methods of steam ploughing: (I) is the 'direct' system, engaging two engines which wind up the rope alternately, and advance along the headland between bouts; (II) is the 'roundabout' system, where a portable engine A drives a windlass B in either direction as required. C, D, are self-acting anchors, which resist the pull of the rope; and as the slack-rope anchor automatically winds itself in the direction of the claw anchor F, the tight-rope anchor is meanwhile fixed. G is a rope porter. Fig. 552 serves to explain underground haulage. An endless rope is used at (I), being crossed at J to obtain a greater grip on the clip pulley H, and tightened at E with a heavy weight. (II) employs a pair of winding drums C, as in the case of steam ploughing. The haulier attaches his wagon by scissors grip at A. The up and down rails are omitted for clearness.

Fig. 553 represents the lifting gear at a pit-head. The cages move in opposite directions, and while one drum is winding the other pays out, a brake being attached to each. When the mine is very deep, the conical drum, Fig 553*a*, is advisably employed. It is on the fusee principle. When the cage is near the bottom the load is greatest, due to rope weight, and the drum radius is decreased, so that an approximately even turning moment is required throughout the lift. Overwinding has constituted a serious danger, and may be avoided either by automatic reversing gear on the engine, or the detaching hook in Fig. 556 (Walker's). The mouth of the hook is usually closed by the ring A, but if the engine be over-run the hook attempts to pass through the ring B, in the beam C above the

Digitized by Google

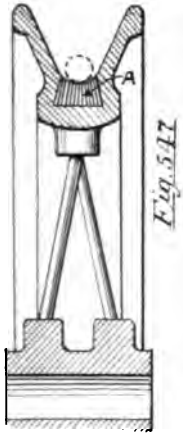

Fig. 547

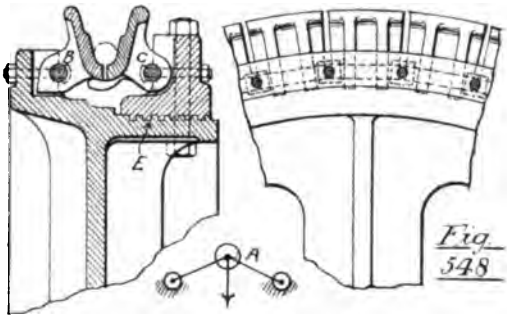

Fig. 548

Fig. 549

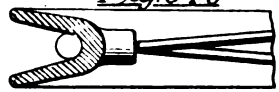

Pullies for Wire Rope.

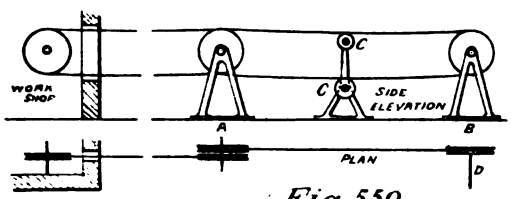

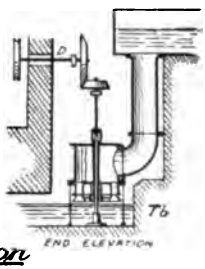

Fig. 550.

Wire-rope transmission

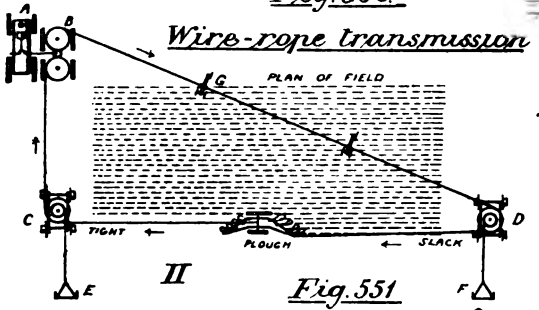

Fig. 551

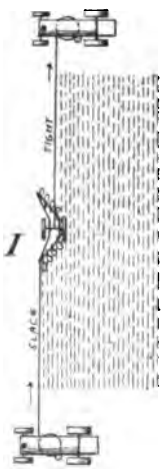

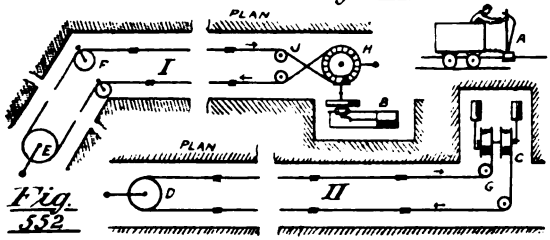

Fig. 552

Digitized by Google

pit-head; and A is thereby caught, being slipped relatively downward. The jaws then open or catch on B, as at D.

Fig. 554 shows Fowler's travelling crane driven by wire rope round clip pullies. A is the rope arrangement, and the power is distributed for travelling at C C, cross traversing at D, and lifting at E F. The last is accomplished by the rotation of screw F, which shortens the lifting chain attached to nut E. The arrangement is suitable for very heavy cranes.

Cable tramways are useful for bad inclines. An endless rope travels in a conduit A, Fig. 555, and the car carries the gripping lever B, which, when moved to the vertical, raises the rollers C C, and brings the jaws D D together. Some jerk is, of course, unavoidable.

Fig. 557 is a towing arrangement adopted on some German canals. A rope is anchored on the canal bottom, and the tug winds itself along by the engine-driven clip pulley. The rope serves as a rail, and with the pulley forms a kinematic pair.

In wire-rope transmission the tension ratio is usually 2 : 1 and the speed 3000 to 6000 feet per m. The stresses in the rope are due to:

(1) Weight of rope and the form of hanging curve.
(2) Bending of rope round pulley.
(3) Centrifugal force.

(1) In Fig. 558 the catenaries may be considered as parabolas for all practical purposes. Then the tangent T A being drawn, by bisecting C D at A, the force diagram will give the value of T, in terms of W the weight of rope between the pullies, and B the pressure on the bearing. The weight of wire rope per foot = $(1{\cdot}34 \times d^2)$ lbs. (2) Taking the general bending formulæ,

$$B_m = \frac{E\,I}{\rho} = f\frac{I}{y} = fZ \qquad \text{and } I = Zy$$

where ρ = radius of pulley, and y that of the rope:

$$\frac{E\,Z\,y}{\rho} = fZ \quad \text{or } \underline{f^{\text{lbs}}} = \frac{E\,y}{\rho} = 30{,}000{,}000\ \frac{y}{\rho}.$$

Digitized by Google

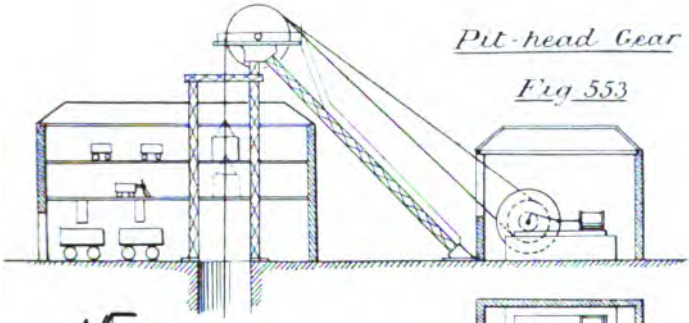

Pit-head Gear

Fig 553

Fig 553a

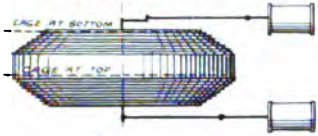

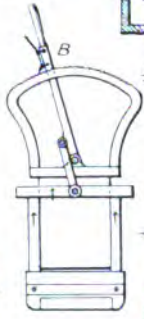

Fig 555

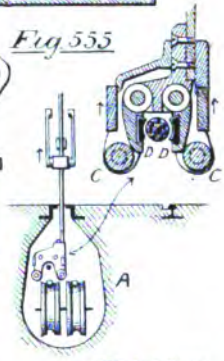

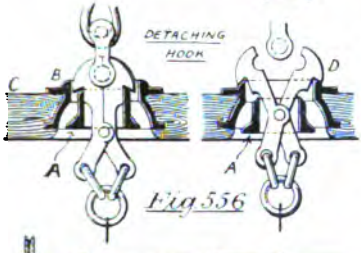

Fig 556

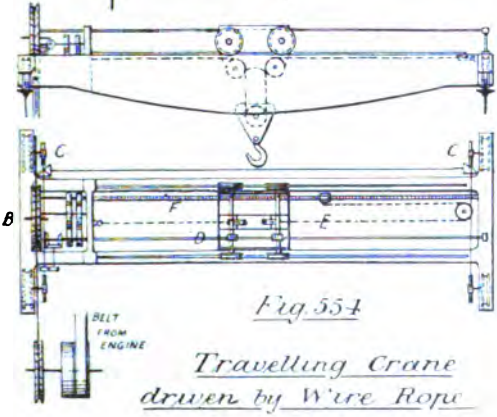

Fig 554

Travelling Crane driven by Wire Rope

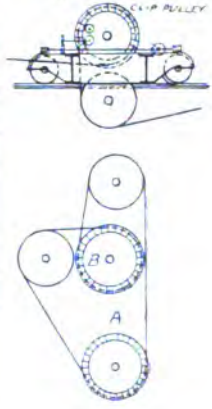

Digitized by Google

(3) has been already treated for belt and cotton rope. The safe strength of the rope must meet the combined stress (1) + (2) + (3), but the driving tensions T_n and t_n caused by T will both be decreased by the stresses (2) and (3).

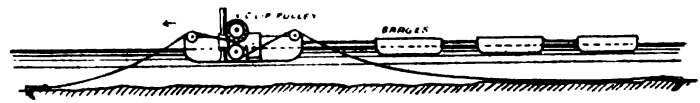

Fig. 557 TOWING

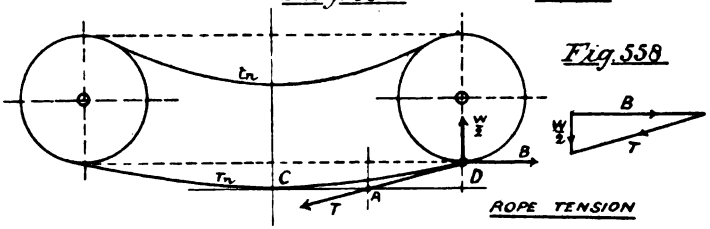

Fig. 558 ROPE TENSION

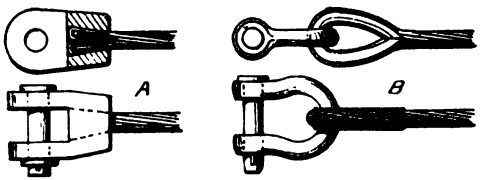

Fig. 559

Shackles for Wire Rope

Two shackles are shown at Fig. 559. At A the wires are bent back and soldered, giving a joint equal to the rope strength; but B is wrapped round a wrought-iron eye and then spliced, the joint having but 50 or 60 °/₀ of the rope strength.

(9.) **Pitch-chain Gearing** serves the purpose of belting where positive driving is required or considerable pressures are to be transmitted. If high speeds are employed, the gear should be exceptionally well made. Much power is lost in friction, and the journals must be adjustable to take up stretch or wear.

Fig. 560 shows three forms of chain. At A the teeth bear on solid inner links, but at B and C they engage with the pins, and the smaller pitch obtained gives more regular driving. There are

Digitized by Google

two sets of friction surfaces; the teeth on the pin and the pin on the inner links. B decreases the friction of the former surfaces by the introduction of rollers, and at C the latter surfaces are enlarged by riveting a ferrule to the inner links. The pins should be shouldered, so that the links may work clear at the sides; and the teeth are involute curves having the arc of pin centres as base circle.

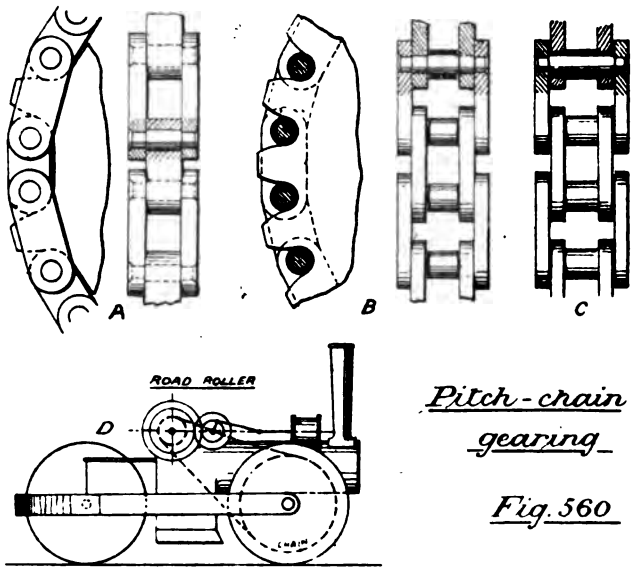

Pitch-chain gearing.

Fig. 560

D is a road roller supplied with pitch chain, and Fig. 569 an electric car driven by chain from a dynamo. Cycle driving is a well-known application.

(11.) **Compressed Air** is of great advantage as a long-distance transmitter, and as such has been used for motors in mines, for tunnelling machines, and for distribution from central stations in towns. In mines and workshops, the exhaust serves also for ventilation. To be effective the compressors should be on a somewhat large scale, and the arrangement is shown in Fig. 561, where steam in cylinders A A is used to compress air in the

Digitized by Google

cylinders B and C, which is conveyed thence to a storage receiver for distribution by main to the various motors.

When work is done on a gas, the temperature is raised, by reason of the conversion of that work into heat; and again, when a gas does work its temperature is lowered, for a reverse reason.

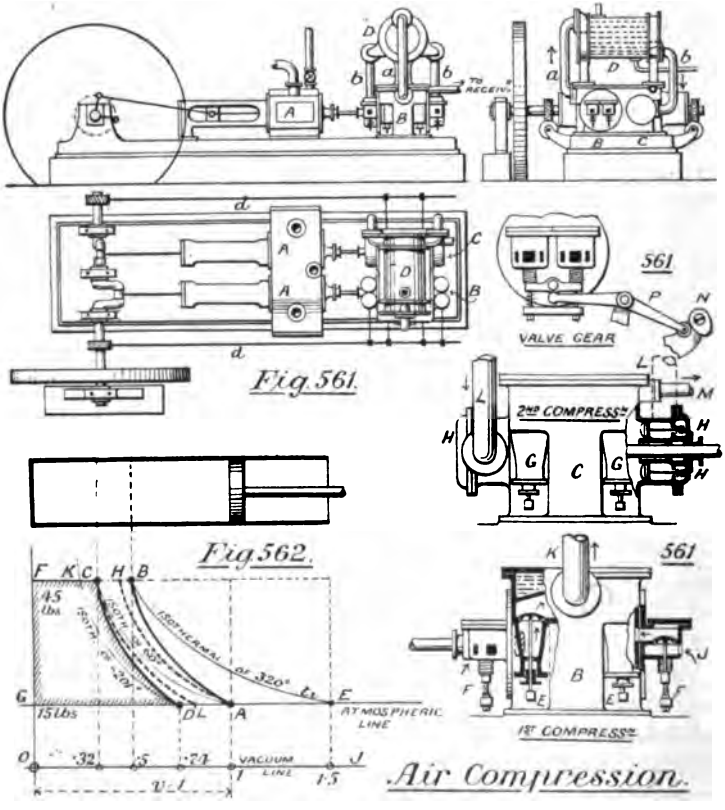

The changes are shown in Fig. 562. Draw co-ordinates O F for pressure and O J for volumes; then let the piston commence with a cylinder volume I, opposite A, and atmospheric pressure 15 lbs. at I A, the temperature being 60° F. A C is a hyperbola or *isothermal* ('at constant temperature') of 60°, while E B and D K

Digitized by Google

are parallel hyperbolas at 320° and − 201° respectively. In compressing the air without subtracting heat, its temperature rises to 320°, and the pressure curve is the *adiabatic* ('no heat passing through') from A to B, the volume being now reduced to ·5 with pressure 45 lbs. Suppose the temperature next to lower to 60° during transit to motor, pressure remaining constant, which is practically true, the volume will decrease from B to C, viz., to ·32. Next let the air expand behind the motor piston, without adding heat, and its pressure will fall to 15 lbs., while its volume becomes ·74, and the expansion curve will be the adiabatic C D, the final temperature of which is − 201°. The area A B F G shows the work given to the gas, C D G F that restored to the motor, and the loss due to cooling is the area A B C D, being here about 27%. In practice the curves would more nearly approach the thick dotted lines, but there are losses in steam cylinder, main, and motor, which may reduce the efficiency to 30% instead of the 73% shown.

Formerly simple steam-engines were employed as compressors, but these are now replaced by compound engines; much improvement too, has been made in the methods of cooling. It being granted that isothermal compression is the ideal condition, the old water-jacketing proved inefficient, as removing the heat after adiabatic compression had been permitted. Water pistons were little better, being cumbrous and slow; while water spraying in the air cylinders both spoilt the cylinders and gave but a slight further advantage, for the time was too short for the heat to be taken up. The greatest improvement was made by the introduction of two-stage compression, or the performing of the work in two cylinders, with an intermediate cooler. It can easily be shown that if a succession of such cylinders and intermediate coolers be used, the compression may be truly isothermal, thus gaining a large portion, but not all, of the lost work area, for loss in the motor may still occur. The blocking of the ports with ice or snow on account of the low temperature of the motor exhaust caused trouble which an attempt to overcome was made in 1887, by re-heating the air entering the motor, but the economic results proved such a surprise, that the method has ever since been followed, with increasing success; and it is now clearly under-

Digitized by Google

stood that the employment of fuel in a re-heater is attended with some six times the economy of the same fuel used in a steam boiler furnace. Figs. 563–4 show at B an electrical re-heater formed of resistance coils in the circuit of the dynamo A, and at G a stove re-heater through which the air pipe passes. Still another saving is obtained by air injection. As heat is nothing but a form of work, it may be made to do work as soon as generated, instead of being allowed to dissipate. In Fig. 564 this is done by allowing the hot air to pass from the receiver D through the injector nozzle F, and thus an additional quantity of air is drawn into the cold receiver E to fill up the loss caused by shrinkage during cooling. The air being compressed to 100 lbs. at a temperature of 484°, is reduced to 50 lbs. in E, with a temperature of 201°; but the gain is certain, for the heat has been made to do work.

Much mechanical improvement has been introduced in the compressors, such as the use of lever-lifted valves instead of air-moved flaps, avoiding wire-drawing. Clearance spaces have been much reduced, and the mains increased so as to bring the air velocity below 30 ft. per sec. Referring now to Fig. 561, the cylinders A A are compound high and low pressure, and the air enters first the suction valves F F of the cylinder B. Leaving by the valves E E, it passes by *b* to the surface condenser D, and then to the second cylinder C, which it enters by H H and leaves by G G. Finally it passes by pipe M to the storage receiver. The valves are lighted by levers P, moved by cams N on shafts *d d*.

The Paris Compressed Air Company delivers about 8000 H.P. from two central stations, through thirty-five miles of piping, the further motor being 4½ miles away. Prof. Kennedy measured the efficiencies in 1889, and found that for one I.H.P. in central engine, the customer received ·39 I.H.P. with cold air and ·47 with air re-heated just before entering his motor. With two-stage compression and other improvements, François showed in 1891 that a total efficiency of ·46 could be reached with cold air, ·65 with hot air, and ·8 if the hot air was sprayed with water; which results have since been approached. This assumes efficiencies of compressor, main, and motor at ·9, ·96, and ·93 respectively.

Digitized by Google

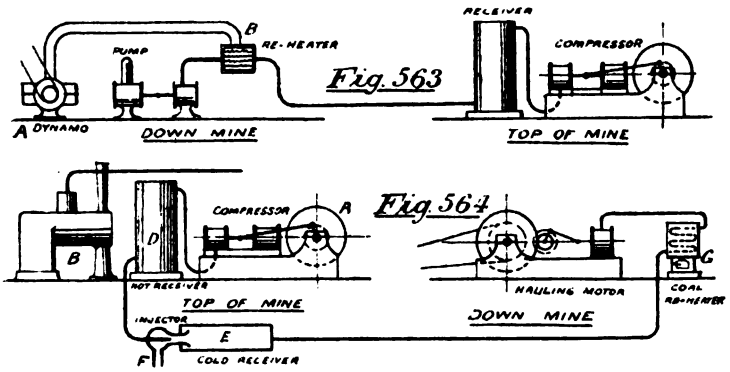

Fig. 563

Fig. 564

Compressed Air Transmission.

(12.) **Hydraulic Transmission.**—Refer to Chapters VII. and XI.

(13.) **Electric Transmission** can only be briefly described. Faraday, in 1831, discovered magnetic induction, by which a current is generated in a closed circuit wound on a bobbin, when the latter is moved before the poles of a permanent magnet (A, Fig. 565.) Pixii, Clarke, and others thereupon, in 1832, devised the magneto electric battery B, where the bobbins are rotated, and introduced the commutator to reverse the alternate currents formed at C and thus 'straighten out' the total current. Nollet, Van Malderen, and De Meritens improved this machine up to the year 1871, dispensing with commutator, and thus producing alternating currents (D). Dr. Siemens devised the H armature E in 1857, working with compound magnet, and in 1866 Wilde employed a small Siemens machine F with commutator to excite the electro-magnets G of a much larger machine, and thus avoid the necessity for large permanent magnets. The progress now was very rapid, and in 1867 Siemens, Wheatstone, and Varley separately discovered the 'dynamo-electric principle,' by which the machine was made wholly self-exciting, the mere residual magnetism in the soft iron core, whether new or after use, being sufficient to commence the current, which then gradually increased up to its maximum. K is a Siemens dynamo with H armature and commutator, the currents being thereby

Digitized by Google

continuous. In 1871 Gramme developed the Pacinotti ring armature as at J, to obtain a *steady* continuous-current dynamo, and this is the end of our story, for all modern dynamos are developments of either K or J. It is most important to notice,

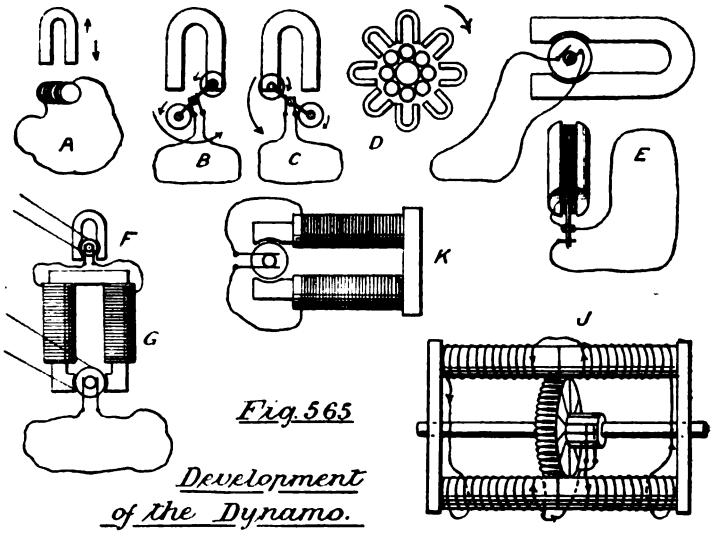

Fig. 565

Development of the Dynamo.

however, that all dynamos are *reversible*, that is, may be used either as *generators* or *motors*.

Fig. 566 shows a generator-dynamo at A and a motor-dynamo at B. Power given to A will be transmitted electrically to B, and the latter will rotate, thus returning the mechanical energy deposited at A; but the rotation of B will be in the reverse direction of A's rotation. This is called *direct* transmission.

Electric energy may, however, be stored. In 1800 it was found that when the electric circuit was completed by dilute acid between platinum poles, oxygen was given off from the positive and hydrogen from the negative wire (A, Fig. 567). Ritter, in 1803, showed that the platinum poles and liquid constituted a battery, which would *return the current*. In 1879 Planté made this fact of use by building the storage battery B, which consisted

Digitized by Google

of two sheets of lead *a* and *b*, rolled into a spiral, with insulating strips between, and placed in a vessel containing dilute sulphuric acid. Charging till the positive surfaces were coated with lead dioxide and the negative with metallic lead, the plates were in such a chemical condition as to constitute a return battery. Faure shortened the time of charging by coating the plates with red lead (the lower oxide), and covering this with parchment tied with strips. The only difference in action was that spongy lead

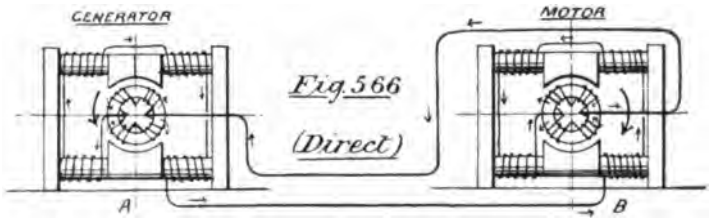

Fig. 566

(Direct)

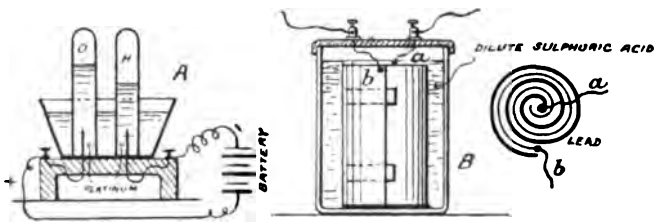

(By Storage.) *Fig. 567*

Electric Transmission.

was formed at the negative plate, thus giving a large surface. Present storage or secondary batteries (otherwise accumulators) are on Faure's principle, and do not really store electricity, but change electrical energy into that of chemical separation. They are useful where the demand for power is intermittent, and are fairly effective, the leakage during a few days being but small.

Efficiency.—The work lost during transformation in a dynamo may be as low as 8 %, though it more often reaches 15% or 20 %. A greater loss usually occurs, however, between generator

Digitized by Google

and motor, the resistance of the circuit causing dissipation of energy as heat. If

C = current in ampères, Q = quantity in Coulombs,
E = electromotive force in volts, W = work in foot pds.,
R = resistance in Ohms,

Then:

$$\text{H. P} = \frac{C^2 R}{746} = \frac{E C}{746} = \frac{E^2}{746 R}$$

$$W = \cdot 737\, E Q$$

$$C = \frac{E}{R} = \sqrt{\frac{746 \text{ H. P.}}{R}} = \frac{746 \text{ H. P.}}{E}$$

$$E = CR = \frac{746 \text{ H. P.}}{C} = \sqrt{\text{H. P.}\, 746\, R} = \frac{W}{737\, Q}$$

$$R = \frac{E}{C} = \frac{746 \text{ H. P.}}{C^2} = \frac{E^2}{746 \text{ H. P.}}$$

$$Q = \frac{W}{\cdot 737\, E}$$

If l be the length of a circuit in feet, both lead and return, and a = sectional area of wire in sq. in.,

$$\text{R at } 60^\circ \text{ F} = \frac{l}{a} \times \frac{8 \cdot 4}{1{,}000{,}000}$$

when copper wire is used. Also if the E. M. F. drops from E to e and the current from C to c in flowing from generator to motor, and if W is the work put in by generator and w that received by motor,

$$\text{Efficiency of circuit} = \frac{w}{W} = \frac{e}{E} = \frac{C - c}{C}$$

Example 54.—A dynamo driven by turbine can generate 50 ampères at 300 volts. The current is carried by two No. 6 W. G. copper wires to drive a workshop motor ¼ mile away. Assuming the commercial efficiency of the generator as 86%, and that of the motor as 84%, find the mechanical efficiency of the whole system.

Digitized by Google

H. P. given out by generator $= \frac{EC}{746} = \frac{300 \times 50}{746} = 20$

H. P. Turbine must give to dynamo $= \frac{20}{\cdot 86} = 23\cdot 25$

R of circuit, taking lead and return (dia. of wire = ·192, area = ·03, l = 2640 ft.) $= \frac{2640 \times 8\cdot 4}{\cdot 03 \times 1{,}000{,}000} = \cdot 74$ ohms

$\therefore$ H.P. lost in wire $= \frac{C^2R}{746} = \frac{50 \times 50 \times \cdot 74}{746} = 2\cdot 48$

H. P. delivered to motor is that generated less that lost in wire. $= 20 - 2\cdot 48 = 17\cdot 52$

H. P. available at shop shafting $= 17\cdot 52 \times \cdot 84 = 14\cdot 71$

But H. P. given by turbine was 23·25

$\therefore$ Gross efficiency $= \frac{\text{H. P. taken out}}{\text{H. P. put in}} = \frac{14\cdot 71}{23\cdot 25} = \cdot 6327$ or $63\frac{1}{4}$ %

and efficiency of circuit only $= \frac{\text{H. P. delivered to motor}}{\text{H. P. generated}}$

$= \frac{17\cdot 52}{20} = \cdot 876$ or 87·6 %

there being 12·4 % of the generated H. P. lost in the wire.

Two actual cases may be quoted. (1) $4\frac{1}{2}$ H. P. was transmitted 8 miles through $\frac{5}{32}$" telegraph wire, with a total efficiency of 30 %. (2) The dynamos having a resistance of 470 ohms, and the circuit 950 ohms, the line being 34 miles long, a total efficiency of 32 % was obtained by decreasing revolutions from 2100 at generator to 1400 at motor, the potentials dropping 2400 to 1600 volts, a method of working first advised by Siemens.

Storage cells are objectionable for tramcar and locomotive driving on account of their great weight, 2 tons of cells being about the weight required for a 1-ton car. The following results are from an actual experiment with Faure accumulators:

35 cells of 95 lbs. each ...	=	$1\frac{1}{2}$ tons.
H. P. absorbed in charging ...	=	1·558.
Time of charging	=	22 hrs. 45 mins.
Lost work in charging ...	=	34 %
Chemically stored energy ...	=	66 %
Recovered electric energy ...	=	60 % of 66 % = 39·6 %.

Digitized by Google

Figs. 568 and 569 are examples of electric transmission. In the former a turbine A drives vertical shaft D, and, through bevel gear, the generator-dynamo E. A motor F then gives the power to a line shaft G through counter-shafting H. In Fig. 569 a car is driven by motor and pitch chain, the current being taken from

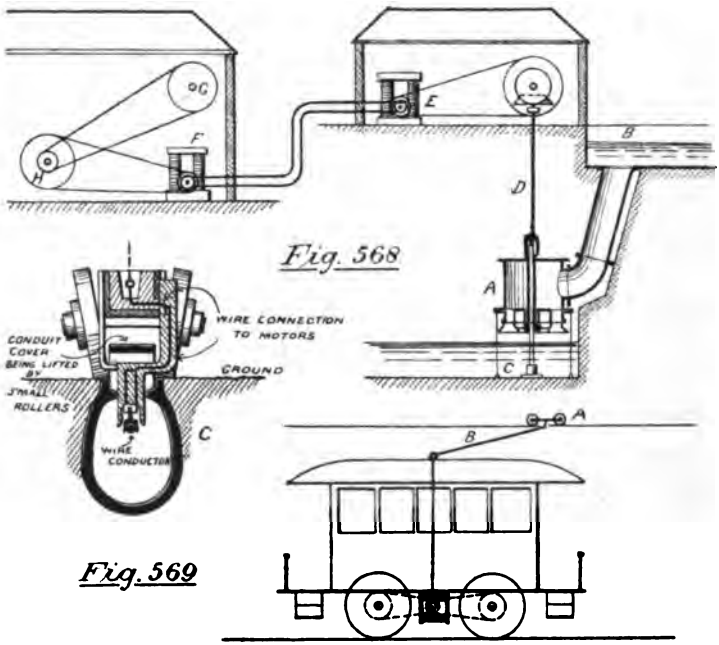

Examples in Electrical Transmission.

line wire by a trolley A, through the 'fishing rod' B, and the return taking place by earth. C is the conduit system adopted by Mr. Brain, where the wire is underground, and the slit covered by a strong steel band. The latter is lifted by the little trolley, as it passes, to allow of the connection between circuit and motor. Electric travelling cranes are a recent development, the motor being placed on the travelling girders. (*See Appendix III.*)

Digitized by Google

Laws of Friction.—'Solid' friction (or the friction between solid surfaces) is here meant, in contradistinction to fluid friction. There are three laws, as follows:

The tractive force required to overcome friction:—

(1) Depends directly on the pressure between the surfaces in contact.
(2) Is independent of the extent of the pair of surfaces in contact, but (2*a*) increases in proportion to the number of pairs of surfaces.
(3) Is independent (at low velocities) of the relative velocity of the surfaces.

Further, the force depends on the co-efficient of friction (μ) for the particular materials, thus,

Tractive force $F_n = \mu P$ where P = total pressure.

COEFFICIENTS (μ) OF FRICTION AT VERY LOW SPEEDS. (MORIN.)

MATERIALS.	Method of Lubrication.						
	Dry.	Water.	Olive oil.	Lard.	Tallow	Dry soap.	Polished and greasy.
Wood on Wood...	·5	·68	...	·21	·19	·36	·35
Metal on Metal...	·18	...	·12	·1	·11	...	·15
Wood on Metal...	·6	·65	·1	·12	·12	...	·1
Hemp on Wood...	·63	·87	...	...	...	...	...
Leather on Iron . .	·54	...	...	...	...	...	..
Leather on Wood	·47	...	...	...	...	...	·28
Stone on Stone...	·71	...	...	...	...	...	...
Stone on W.I. ...	·45	...	..	...	...	...	...
Wood on Stone...	·6	...	...	...	...	...	...

As μ is the trigonometrical tangent of the friction angle ϕ (*see p.* 560), the latter may be found as in Fig. 570, by dividing a base-line into tenths and setting up μ on a perpendicular from the mark 1, to the same scale. Thus, for dry metal, $\phi = 10°$, when $\mu = ·18$. (*See Appendix II.*)

Digitized by Google

Morin's experiments are not true for very heavy loads or high velocities. For the first, Ball gives

$$F_n = \cdot 9 + \cdot 266\ P$$

for wood on wood, and the relation is set out in Fig. 571, the dotted line showing the result of the ordinary formula with $\mu = \cdot 336$.

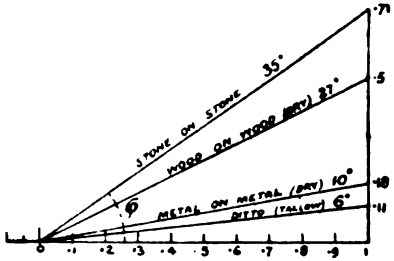

Fig. 570

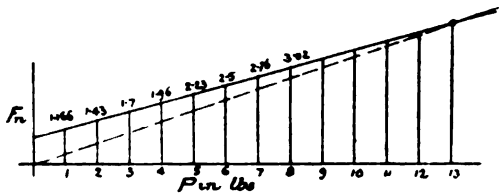

Fig. 571

As regards velocity, at the Brighton brake trials, 1878, the following results were obtained when the static coefficient was ·242.

Vel. ft. per sec.	μ between brake and wheel.	μ between wheel and rail.
80	·106	...
50	·153	·065
40	·171	·07
20	·213	·072
10	·242	·088
near rest	·242	·242

Digitized by Google

As there was probably considerable abrasion in these results, it is doubtful whether they should be accepted, further than generally, for pure friction. The second column shows that the wheels should not be allowed to skid when stopping the train.

If surfaces are thoroughly lubricated the frictional resistance is of a 'mixed' kind, being neither solid nor fluid. The following comparison is useful:

COMPARISON OF THE LAWS OF SOLID AND FLUID FRICTION.

Solid friction is :—	Fluid friction (gas or liquid) is :—
1. Directly as pressure.	1. Independent of pressure.
2. Independent of surface.	2. Directly as wetted surface.
3. Independent of velocity (at low velocities).	3. Directly as v at creeping velocities. as v^2 at moderate velocities. as v^3 at high velocities.

The **Friction of a Journal Bearing** was investigated by Beauchamp Tower for the Institute of Mechanical Engineers. The load was carried on one brass only, a top one, and the journal ran in an oil bath. The coefficient varied with the lubricant. With oil-bath lubrication F_n was independent of pressure, and $\mu \propto \frac{1}{P}$. In terms of velocity,

$$\mu = c\frac{\sqrt{v}}{p}$$

where c varies with the lubricant. Thus, when $v = 4$ and $p = 300$.

Lubricant.	c	μ	Lubricant.	c	μ
Olive oil	·289	·00192	Sperm oil .	·194	·00129
Lard oil	·281	·00187	Rape oil...	·212	·00141
Mineral grease	·431	·00287	Mineral oil	·276	·00184

With syphon lubrication $\mu = \frac{c_1}{p}$ where $c_1 = 2{\cdot}02$ for rape oil, and with pad lubrication $\mu = {\cdot}01$ for rape oil. The bearing seized when p rose above 600 lbs. (*See Appendix II.*)

Digitized by Google

Friction of a Collar Bearing.— This was examined under the same auspices. Here the friction was nearer the 'solid' condition, the lubrication being less perfect. The pressure p varied from 15 to 90 lbs., and v from 5 to 15 ft. per sec. The coefficient was ·036 for ordinary loads, the usual formula being applicable.

Work Lost in Journal or Collar Friction.—R being outside or mean radius respectively,

$$\text{Work lost in foot pounds per m.} = F_n \times V = \mu P \times 2\pi R N$$

$$\text{and H. P. lost} = \frac{\mu P \times 2\pi R N}{33000}$$

Work Lost in Pivot Friction.—Following the method

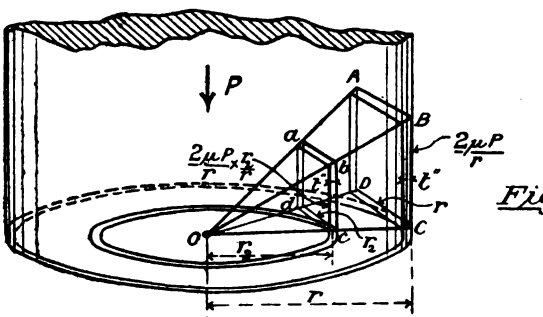

Fig. 572

Work lost in Pivot friction.

of Fig. 371, let r be the pivot radius in Fig. 572. Assuming the pressure to be equally distributed,

$\frac{P}{\pi r^2}$ = pressure per sq. in., and $\frac{\mu P}{\pi r^2}$ = force of friction per sq. in

Total friction on any ring = unit friction × area of ring

$\therefore$ Total friction on outer ring $= \frac{\mu P}{\pi r^2} \times 2\pi r \times t'' = \frac{2\mu P}{r} \times t''$

and Total friction on ring $r_2 = \frac{r_2}{r} \times \frac{2\mu P}{r} \times t''$

Digitized by Google

the resistance increasing gradually from O to B C. But the force must be multiplied by the arm to give the moment. The lamina A B C D represents the moment for the outer ring, being

$$\text{force } \left(\frac{2\mu P}{r}\right) \times \text{arm } (r)$$

Similarly *a b c d* is the moment at ring r_2, and the pyramid volume will give the total moment, thus:

$$\underline{\text{Moment of friction}} = \frac{2\mu P}{r} \times r \times \frac{r}{3} = \frac{2}{3}\mu P r$$

If P and r are in lbs. and inches, the moment is in pound inches, and the distribution of pressure may be such as to reduce it to $\frac{1}{2}$ μ Pr. Concentrating the total force at the outer ring, it will be $\frac{\frac{2}{3}\mu P r}{r}$, and

$$\text{Work lost per m.} = \tfrac{2}{3}\mu P \times 2\pi R N$$
$$\text{which may decrease to } \tfrac{1}{2}\mu P \times 2\pi R N$$

Example 55.—Find H.P. lost in a footstep, whose dia. is 4", total load 3000 lbs., revs. 100 per m., when $\mu = \cdot 06$. (Hons. Mach. Constr. Ex., 1887.)

$$\text{H. P. lost} = \frac{2 \times \cdot 06 \times 3000 \times 2 \times 22 \times 2 \times 100}{3 \times 33000 \times 7 \times 12} = \underline{\cdot 38.}$$

Example 56.—Mean dia. of thrust bearing = 14", screw thrust 40,000 lbs., and pitch 15 ft. $\mu = \cdot 003$, and 1000 miles are travelled in $3\frac{1}{2}$ days. Find H. P. lost in friction. (Eng. Ex., 1888.)

$$\text{Speed of vessel} = \frac{1000 \times 5280}{3 \cdot 5 \times 24 \times 60} \text{ ft. per m.}$$

and as vessel travels 15 ft. per rev.

$$\text{Revs. per m.} = \frac{1000 \times 5280}{3 \cdot 5 \times 24 \times 60 \times 15}$$

$$\therefore \underline{\text{H.P. lost}} = \frac{\mu P\, 2\pi R N}{33000} = \frac{\cdot 003 \times 40000 \times 2 \times 22 \times 7 \times 1000 \times 5280}{33000 \times 7 \times 12 \times 3 \cdot 5 \times 24 \times 60 \times 15} = \underline{\cdot 93.}$$

The form of pivot surface may be flat, conical, spherical, or specially formed. If conical, $\frac{P}{\sin \alpha}$ must be substituted for P, where α = angle at cone apex.

Digitized by Google

Schiele's Pivot, Fig. 573, is generated by a *tractrix* revolving on its own axis. The curve is drawn as follows: Step off equal

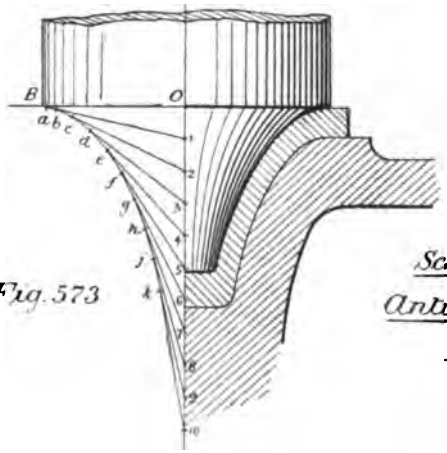

Fig. 573

Schiele's Anti-friction Pivot.

divisions 1 to 10; with radius O B and centre 1 set off 1*a* and join: with same radius and centre 2 set off 1*b* on 1*a* and join: similarly 3*c*, 4*d*, &c.; and then sketch the curve from B to K. This pivot wears equally on all rings, but wastes more energy in friction:

$$\text{Moment of friction} = \mu P r ,$$

or 50% in excess of a flat pivot.

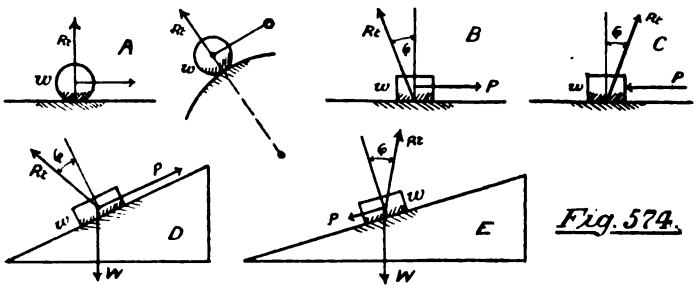

Fig. 574.

The **Limiting Angle of Resistance.**—If a weight rest on perfectly smooth surface as at A, Fig. 574, the reaction is normal

Digitized by Google

to the surface, but if the surface be rough, the reaction is inclined to the normal by the friction angle, *in a direction away from the pull* P, and the latter must now be increased by F_n in order to move the body. If not on the point of sliding, the obliquity of R may be anything less, down to zero. Two cases are shown for the inclined plane, P being directed up or down the plane, but its value may always be found by force diagram. In moving up the plane, total pull must balance gravity + F_n, but in moving down the plane must balance F_n – gravity.

Example 57.—A road engine weighs 12 tons. Find (1) tractive force of engine to pull 48 tons behind it on a level road, and (2) the load drawn up a 1 in 10 incline. Coefficient of traction = 150 lbs. per ton.

(1) Tractive force = (12 + 48) 150 = 9000 lbs.

(2) P × length = W × height and $P = W \times \frac{1}{10}$
Also R will be found to = ·995 W

Tractive force to balance gravity = $\frac{2240}{10}$ = 224 lbs. per ton.
Tractive force to overcome friction = 150 × ·995 = 149·25 „ „ „
Total tractive force = 373·25 „ „ „

But the engine only exerts 9000 lbs.

∴ Total load on incline including engine = $\frac{9000}{373{\cdot}25}$ = 24·11 tons.

and Load drawn exclusive of engine = 24·11 − 12 = 12·11 tons.

Diminishing Friction by Lubrication.—Spongy metals like cast iron, brass, and white metal decrease frictional resistance considerably, but the best results are only obtained by the application of unguents.

Lubricants may be solid, as blacklead; semi-solid, as greases and fats; and liquid, as oils. 'Body' for support, and fluidity to avoid resistance, are both essential requisites, and a careful choice must be made between extremes. The following are the unguents used for various purposes:—

Digitized by Google

1. At low temperatures:	Light petroleums.
2. For intense pressures:	Graphite or soapstone.
3. Heavy pressures, slow speeds:	Tallows.
4. Heavy pressures, high speeds:	Sperm or heavy petroleums.
5. Light pressures, high speeds:	Sperm or refined petroleums.
6. Ordinary machinery:	Lard oil or tallow oil.
7. Steam cylinders:	Tallow or heavy petroleums.
8. Metal on wood bearings:	Water.

'Gumming' or quick oxidation is to be avoided.

Lubricants are tested in about six ways:—(1) By chemical analysis; (2) for specific gravity; (3) for relative viscosity when new; (4) for gumming action; (5) for flashing and burning points; (6) generally, by testing machine.

Beaumé's hydrometer is shown at Fig. 575, being a glass bulb A weighted by mercury at C, which floats in the liquid B to be tested, and the depth to which the stem sinks will show the relative density of B. Thus for

	Spec. Grav.		Spec. Grav.
Sperm oil ...	·881	Castor oil ...	·966
Olive oil ...	·915	Petroleum oil ...	·866
Lard oil ...	·917		

Viscosity may be observed by dropping the oil from a fine tube, and gumming by the apparatus in Fig. 576. The various oils are dropped through the holes A A, from the tube B, and as they travel slowly down a glass plate their positions on the scale are daily noted. Fig. 577 is a graphic rendering of some results, the slowing points being shown by circles and the stopping points by crosses. Flashing points are observed by heating the oil in a closed vessel, then lighting the gas when collected; burning points are where the whole oil takes fire. A low flashing point shows a dangerous oil, 73° F. being the minimum as fixed by law for commercial oils.

	Flashes.	Fires.	Burns.
Sperm oil ...	400° ...	485° ...	500°
Lard oil ...	475° ...	525° ...	525°

Digitized by Google

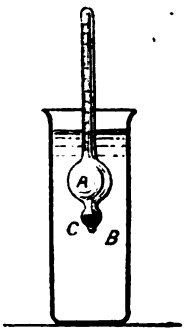

Fig. 575

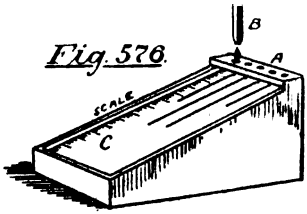

Fig. 576

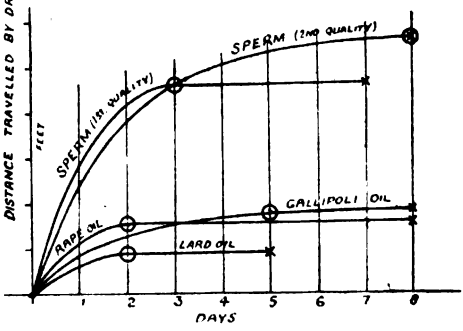

Fig. 577

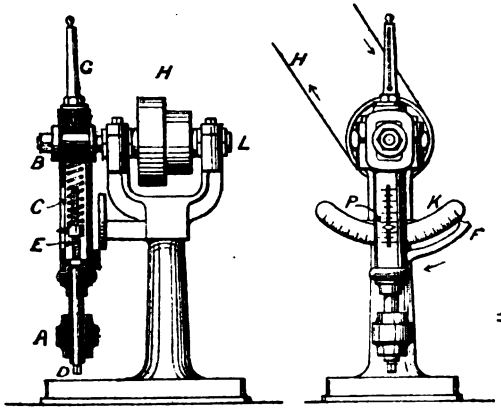

Fig. 578

Prof. Thurston's Lubricant-testing Machine.

Digitized by Google

The most effective test is obtained by machine, of which Professor Thurston's (Fig. 578) is probably the best. A is a pendulum hanging on the test journal B, whose brasses can be adjusted for any pressure by turning the screw D E against the spring C, while P shows the value, both totally and per square inch. The thermometer G indicates the temperature. The journal being rotated towards the right, the pendulum moves to the left, together with pointer F, and the scale K at once indicates the friction per sq. in. of journal, so that

$$\mu = \frac{\text{F's graduation.}}{\text{P's graduation.}}$$

Every five minutes during a test the revolutions, temperature, and graduations are noted, values of μ afterwards found, and the results plotted as curves wherever possible. In his 'railroad' machine, Prof. Thurston uses a full-sized locomotive journal.

Lubrication.—The oil-bath gives the best result, but is rarely found in practice. The self-lubricating bearing, Fig. 579, is perhaps the next best, where the oil is lifted by the shaft collar and distributed by a wiper. The next in order is the oil pad, as contained in the locomotive axle-box, Fig. 580, the bush merely embracing the top half of the journal. Usually lubricators have to be fitted, and are then designed for the conditions. B, Fig. 270, p. 266, is a common syphon lubricator. The oil level being below the syphon-pipe, a piece of cotton wick is placed in the latter and hangs over in the oil. The fluid then rises by capillarity; and the wick is to be removed when the machinery is stopped, otherwise there is unnecessary loss of oil. Leuvain's needle lubricator, A, Fig. 581, is a glass vessel, filled with oil, closed by a wooden plug and inverted. Within the stopper a 'needle' fits freely, and the oil trickles down the latter only when vibrated by the shaft If the dropping of the oil is to be observed and its regulation obtained, such a lubricator as the Crosby sight-feed at B. Fig. 581, may be adopted. When handle *a* is vertical, the valve *b* is raised, and adjustment given by the nut *d*; but when *a* is horizontal, *b* is closed, and the supply stopped.

A loose pulley may be fed with tallow by means of Stauffer's screw-down lubricator C. Oil would only fly away by centrifugal

Digitized by Google

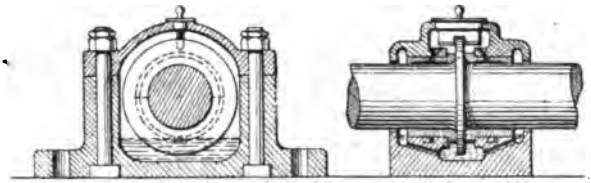

Fig. 579

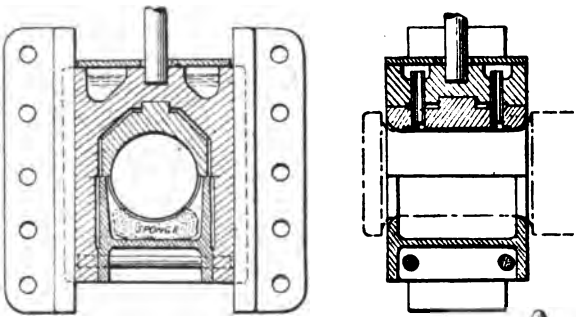

Fig. 580

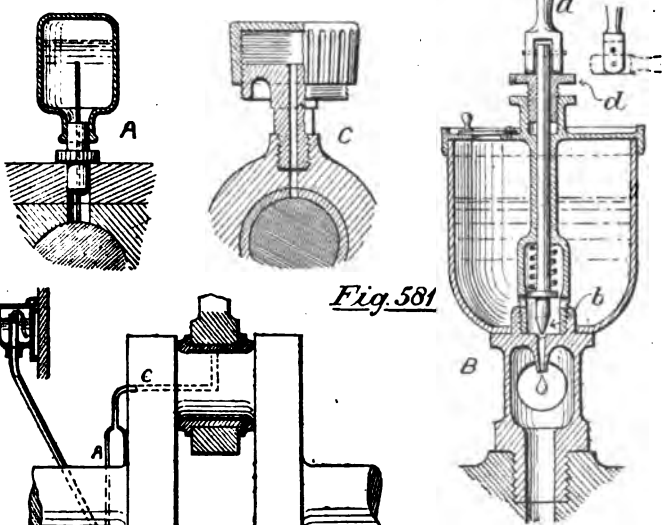

Fig. 581

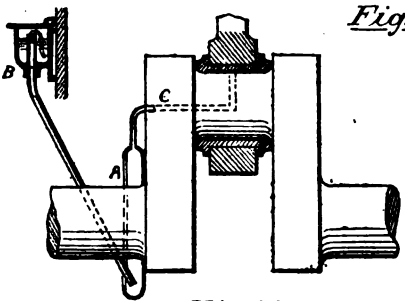

Fig. 582

Lubrication.

Digitized by Google

action, and is therefore inadmissible. A closed sight-feed lubricator (Crosby's) as used for steam cylinders, has been already described at p. 264 and Fig. 270. Fig. 582 shows a method of oiling an engine crank-pin by centrifugal action. The oil being fed from B down the inclined tube, is caught by the cup A and whirled round, when it passes through the pipe C to the crank pin.

Nothing but *uniform* oiling will ensure against seizing. Grooves must be cut in the bushes from the lubricator pipe to the furthest ends of the brass, and more than one lubricator used in long bearings. In some cases small oil pumps have been adopted, but the oil tends to gum by exposure. (*See Appendix II., p.* 868.)

Contrivances for Diminishing Friction.—The cart-wheel A, Fig. 583, is the simplest example. Comparing with a sledge, the friction is reduced in proportion to the distance travelled by the sliding surfaces in each case, or as $\frac{r}{R} : 1$. In small physical apparatus the anti-friction discs at B may be employed, the journal *a* resting on the wheel circumferences, and the sliding at *d d* being thus still further reduced. C is a coned bearing much used in clocks and watches, the work lost being here decreased by the adoption of a small diameter of rubbing surface; lathe centres form another example. A great reduction in friction is obtained when *statical* is substituted for sliding contact. Examples are given in Figs. 584–86. Fig. 584 shows the 'live' rollers used to support the turret of an ironclad. They are tapered towards the centre A, being really bevel cones, and two light rings prevent them changing their prescribed position regarding their fellow-rollers. Referring to Fig. 585, the weight Q compresses the rollers, in the manner shown exaggeratedly at the dotted arcs. The rollers will tend to turn round the fulcra marked, and the equation of moments will be

$$N(\delta + \delta_1) + W\delta_1 = T \times 2r$$

$$\text{But } P = 2T \text{ and } Q = 2N \quad \therefore P = \frac{Q(\delta + \delta_1) + 2W\delta_1}{2r}$$

If more rollers are used, let n = number of rollers: then

$$P = nT \text{ and } T = \frac{P}{n} \qquad Q = nN \text{ and } N = \frac{Q}{n}$$

Digitized by Google

The equation becomes:

$$\frac{Q}{n}(\delta + \delta_1) + W\delta_1 = \frac{P}{n} \times 2r$$

$$\therefore P = \frac{Q(\delta + \delta_1) + nW\delta_1}{2r}$$

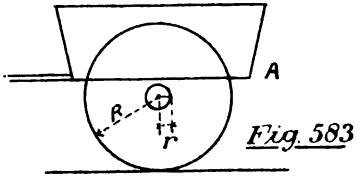

Fig. 583

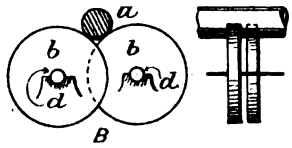

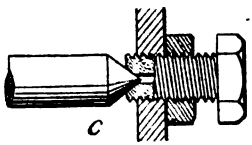

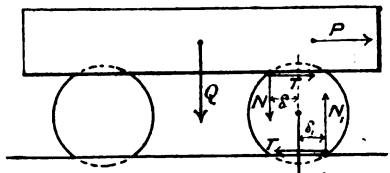

Fig. 585

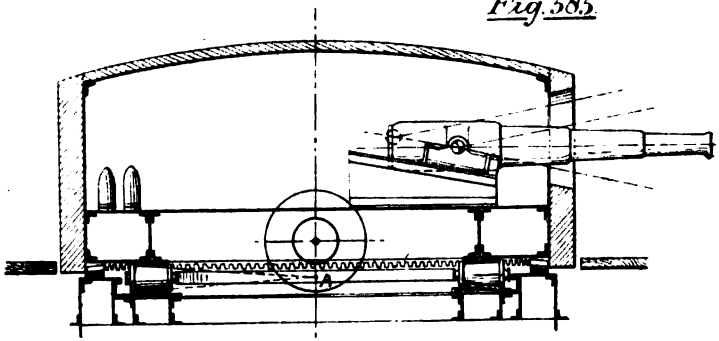

Fig. 584

δ is found by experiment, and

δ = ·036″ for rollers of wood 3′ to 4′ long.
δ = ·072″ for rollers of wood 1′ long.
δ = ·016″ to ·018″ for rollers of iron 5″ or 6″ long.

Digitized by Google

Prof. Osborne Reynolds shows that the action is not so simple as we have supposed, and Prof. Cotterill gives the formula

$$P = \frac{Q\delta}{r}$$

where δ = ·02″ for hard wood or metal.
δ = ·09″ for softer materials.
δ = ·5″ for wheels on macadamised roads.

which is the same as formula previously given if we neglect weight of roller. Rolling friction is not sensibly diminished by lubrication. (*See Appendices II. and III.*)

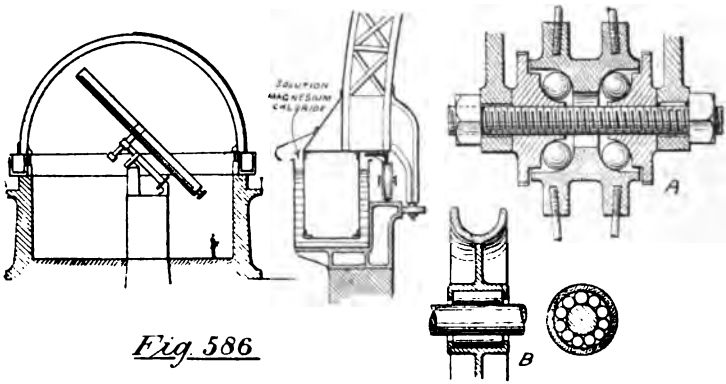

Fig. 586

Ball and roller bearings are shown at A and B respectively, Fig. 586. The former is an excellent arrangement, but the latter cannot be adjusted after wear. Knife edges, Fig. 332, form an example of statical contact. Fig. 586 shows also a case where fluid friction has been substituted by Eiffel with advantage. The observatory dome at Nice was floated in an annular tank, whose section is given, the liquid having a specific gravity of 1¼. The moving load was 95 tons, but could be turned by one man in four minutes. The live rollers were not a support but only a steadiment against wind. (*See Appendix II.*)

Uses of Friction.—Very often friction is a positive advantage: such cases we will now discuss. Fig. 587 is one of many *lock nuts*, the grip being obtained by the compression of the split nut. *Friction clutches* provide disengagement for shafts or pulleys

Digitized by Google

while the machinery is in motion. There are many examples in the market, all possessing one advantage or another. That in Fig. 588 combines Musgrave's grip with Hathorn and Stuart's adjustment. A is a loose pulley on shaft B, and the bell E is keyed to A. D is keyed to the shaft, and carries the right and left-handed screws F F. Levers K K being fixed upon F F, are connected by links H H to the sliding clutch boss G, worked by lever; so it follows that when G is moved to the right and the screws rotated, the gripping shoes are pressed against the bell E, thus connecting the pulley with the shaft. K K are small worm spindles for adjusting the levers to suit wear of shoes. A clutch like the above should be symmetrical in design, so as to be in perfect balance: the shoes should not rest upon the bell-drum when out of gear; and there should be good adjustment.

Weston's clutch, Fig. 589, is designed on the principle of multiple gripping surfaces (*see law 2a, p.* 555). It is now adopted only as a safety appliance, allowing wheels to slip when a shock comes upon them, and thus avoiding breakage. The example shown is the elevating gear for a large gun, the pinion on the right gearing with a rack on the gun, and the connection from A to B being made by means of the clutch. Steel discs *d d* fit on the hexagon C, but are free regarding the worm wheel; and gun metal discs *f f* are keyed to the wheel but free on the shaft. When nut G is tightened, the discs are gripped, and A is connected to B; but when G is released, the wheel is free. H are spring washers.

Brake straps are a means of absorbing power by friction, dissipating it as heat. Fig. 590 represents a traction engine having a brake-drum B securely keyed to its hind axle A. The iron strap B (sometimes lined with wood or leather) encircles the drum, and is tightened whenever the lever D is raised by the screw. Brake blocks, with toggle gear, are shown at Fig. 463.

Friction plays an important part in causing a grip between a locomotive driving wheel and the rails, and the weight of the engine should be sufficient to prevent slipping when starting the load. The resistance of a train to direct pull is from 4 to 25 and even 30 lbs. per ton, which gives the tractive force required. The resistance to slipping is found from the following table:—

Digitized by Google

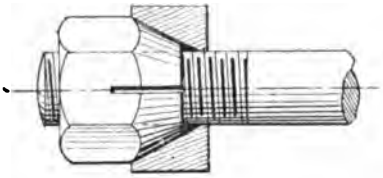

The Gripper Lock-nut

Fig. 587

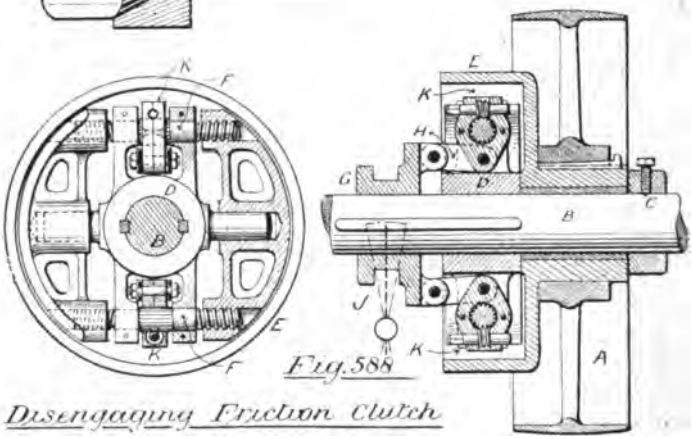

Fig. 588

Disengaging Friction Clutch

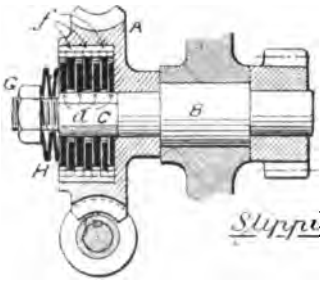

Fig. 589

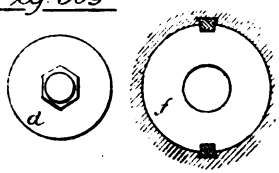

Slipping Friction Clutch

Strap Brake

Fig. 590

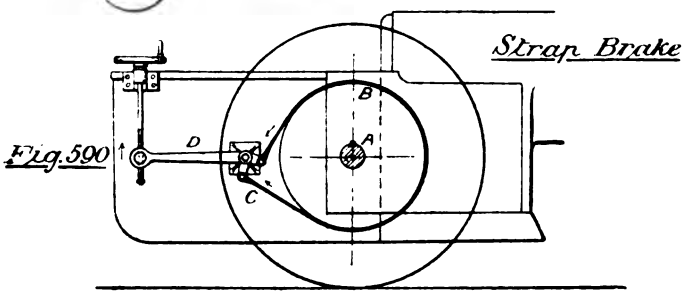

Digitized by Google

ADHESION OF LOCOMOTIVES.

(PER TON OF LOAD ON DRIVING WHEELS.*)

Rails very dry	600 lbs. per ton.
Rails very wet	550 ,, ,,
Average weather	450 ,, ,,
Greasy rails	300 ,, ,,
Frosty weather	200 ,, ,,

(10.) **Friction Gearing** transmits power without jar, and will slip under shock. The forces transmitted are, however, limited. Referring to Fig 591,

$$F_n = \mu P \text{ and } P = \frac{F_n}{\mu}.$$

Taking $\mu = \cdot 25$ for leather on iron, pressure on bearings $= \frac{F}{25} = 4$ times the force transmitted (see A) and in right-angled bevel gear $= \frac{4}{\sqrt{2}}$ times the force transmitted (see B).

To avoid bearing pressure, Prof. Jenkin invented his 'nest gearing,' which is shown in Fig. 592, transmitting power between engine shaft A and dynamo B. To obtain adjustment for the intermediate wheels D_1 D_2 D_3 the shafts A *a* are out of line, and the intermediate studs fixed to a plate with curved slots. The disadvantage of the gear lies in its having six compressed surfaces instead of two.

In Fig. 593, A shows examples of Robertson's wedge gearing, and B, a more recent design of friction gearing, has plates of leather on edge forming the driving surface, the follower being smooth cast-iron. In both cases grip must be obtained by causing pressure on the bearings, either by spring as at Fig. 591, or by weight overhanging eccentric bush as at C, Fig. 593.

Efficiencies of Machines.—The frictional loss in a machine could be investigated for every sliding pair, but in a large machine this would be cumbersome, and considering the variations in the value μ, very probably inaccurate. The engineer prefers then to make experiments upon existing machines and to

* Every coupled wheel is a driving wheel.

Digitized by Google

keep a list of results. By comparing the theoretical and practical ratios of P to W, we may find the ratio of work got out to work put in, which is the efficiency of the machine. Any machine could be taken as a case in point if we knew where P and W

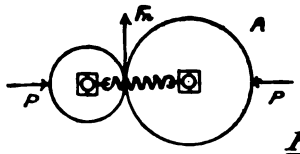

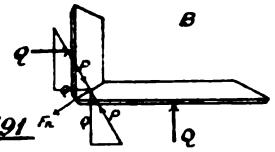

Fig. 591

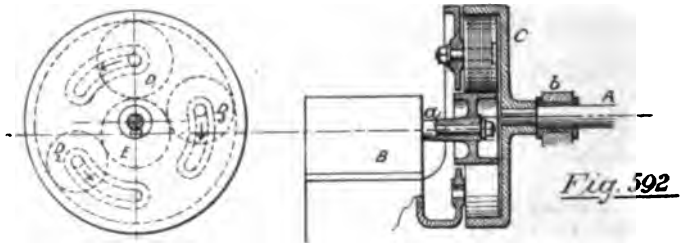

Fig. 592

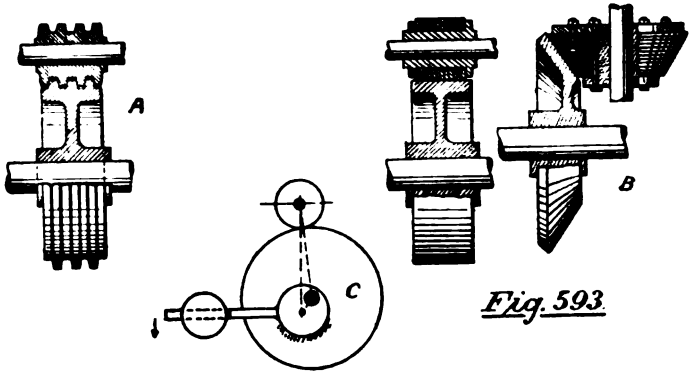

Fig. 593

were to be applied; we will, however, consider the crane in Fig. 594.

Commencing by measuring the motions of W and P, we find that while W moves one inch P moves 224 ins., so the velocity ratio of P and W is 224 : 1. Calculate then the theoretical values

Digitized by Google

of P for various loads at W from ½ a ton to 5 tons. Next hang constantly increasing loads at W, while placing at P the weight

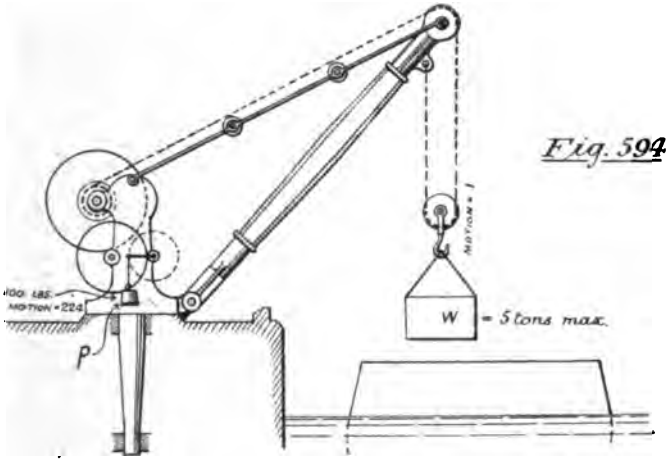

Fig. 594

that will just cause a slow but uniform motion after starting by hand: note the results, and collate as follows:—

CRANE EXPERIMENT.

Load W in tons.	Weight P in lbs. to just overcome load.	Theoretical P.
5	100·1	50
4½	92·4	45
4	84·7	40
3½	77·0	35
3	69·3	30
2½	61·6	25
2	53·9	20
1½	46·2	15
1	38·5	10
½	30·8	5
unloaded	23·1	0

Digitized by Google

Next plot these figures as in Fig. 595, the horizontal scale showing W, and the vertical ordinates the corresponding values of P, O D being the theoretical, and A B the practical profiles, which

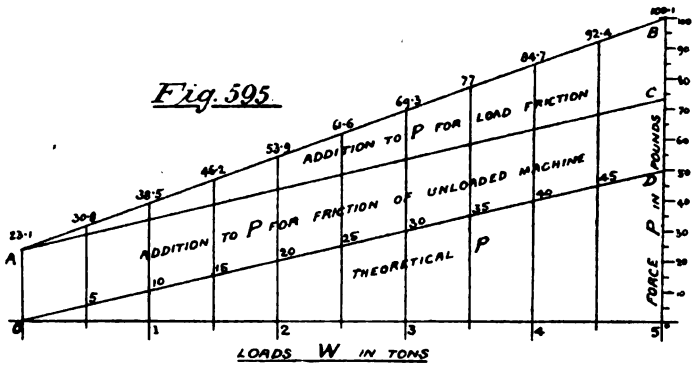

are both straight lines. Draw A C || to O D. Then at any ordinate except O A the total P consists of:

1. Force to overcome load, neglecting friction.
2. Force to overcome friction of unloaded machine.
3. Force to overcome friction due to load.

(2) being a constant quantity as shown between lines A C, O D.

Then, if w be the equivalent weight of the unloaded machine causing friction,

$$P = \underset{(1)}{\tfrac{1}{224}W} + \underset{(2)}{\mu w} + \underset{(3)}{\mu W}$$

$$\text{From (3) we find } \mu = \frac{F_n}{W} = \frac{BC}{5 \times 2240} = \cdot 00687.$$

Supposing μ a constant throughout the machine,

$$P = \frac{W}{224} + \cdot 00687\, w + \cdot 00687\, W$$

and as O A $= 23 \cdot 1 = 3362 \times \cdot 00687$: $w = 3362$ lbs.

Digitized by Google

$$\text{Efficiency per cent.} = \frac{\text{power utilised} \times 100}{\text{power put in}} = \frac{u \times 100}{U}$$

$$\therefore \text{When } \underline{W = 5 \text{ tons, efficiency}} = \frac{50 \times 100}{100 \cdot 1} = \underline{50\% \text{ nearly}}$$

$$\text{and when } \underline{W = 1 \text{ ton, efficiency}} = \frac{10 \times 100}{38 \cdot 5} = \underline{26\% \text{ nearly}}$$

which shows the advisability of working a machine near its full load. (*See Appendix II.*)

Dynamometers are best used when the power given to or by a continuously-moving machine is to be ascertained. The method just described might well be employed to measure *starting* loads; but *working* loads are often much less, and the above treatment is not then admissible. Dynamometers show the load supported with any speed of revolution, and the latter is measured by a counter. Absorption dynamometers abstract the work while measuring it, and dissipate it as heat, while transmission dynamometers pass it on unimpaired, absorbing only an inappreciable amount in frictional loss.

An *Absorption Dynamometer*, or 'brake,' is shown in Fig. 596. The engine whose power is to be measured has its crank coupled to A, and revolves in the direction of the arrow. Belt driving should be avoided on account of the loss in slip. The drum B carries a brake strap C lined with wood, which is tightened at H. Sufficient resisting weight is hung at W, whose rise is prevented by the stop J, after H has been screwed up to just support the average load: the self-acting lever D E preventing any important rise or fall of the points G H, which must be level with drum centre. As E would travel further than F, a right-handed slip of the strap will slacken the latter, and a left-handed slip tighten it, thus preserving the original position. The spring balance S conveniently measures small deviations of load, and the weight supported will be (W—S), the radii R, R, being equal. Then work absorbed per rev. = weight × distance travelled = (W – S) lbs. × 2 πR feet (if the pressure on stud D be inappreciable) and

$$\text{H. P.} = \frac{(W - S) \times 2\pi R N}{33000} \qquad (\textit{See Appendix II.})$$

Digitized by Google

Friction is only the ***medium*** for absorption, and does not enter into the calculation. The arrangement at K permits adjustment for various motors.

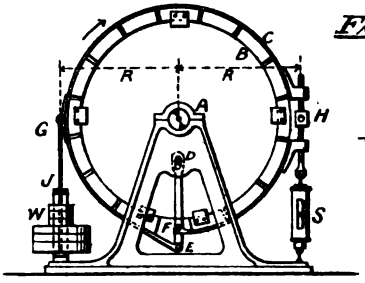

Fig. 596

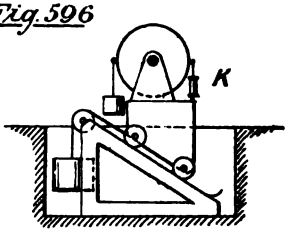

Absorption Dynamometer.

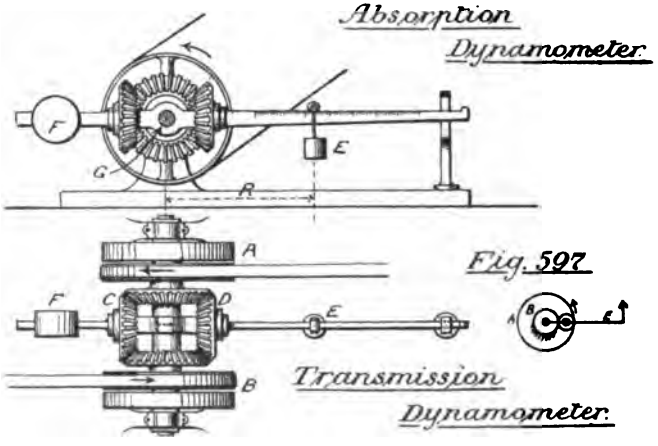

Fig. 597

Transmission Dynamometer.

White's Transmission Dynamometer is represented in Fig. 597. A is the motor shaft, and B that of the driven machine. As A turns left-handed, the arm F E is held back by the weight E, and thus B is turned to the right. Supposing the arm *were* carried round, *no work* would be given to B, which would be stationary, but E's rotations would be half those of A (*see Fig.* 526). The load supported on A would therefore be half that on E (at equal radii). But although the power be taken off at B, A and E have yet the same relation, so that

Digitized by Google

work transmitted = load on A × distance travelled on A and load on A = half that on E,

$$\therefore \text{ work per min.} = \frac{E}{2} \times 2\pi R N \qquad \text{and H. P.} = \frac{E \pi R N}{33000}$$

F counterbalances the lever weight.

List of Efficiencies.—Efficiencies in various cases, as found by the methods previously described, are as follows:

Cranes worked by spur gearing...	30% to 60%
Worm gearing (indifferently constructed)	30%
Worm gearing (very carefully constructed)	90%
Weston pulley block, well greased	30% to 40%
Screw jack	15% to 35%
Cornish engine (Brake H. P. ÷ Indic. H.P.)... ...	35% to 60%
Other engines (Marine, Loco, Gas, Oil, &c.)... ...	75% to 85%
Undershot water wheels...	25% to 30%
Overshot water wheels	70% to 75%
Breast wheels (Poncelet floats)	60% to 65%
Pelton water wheel	80% to 90%
Turbines (full sluice)	60% to 80%
Hydraulic press (neglecting pump)	98% to 99%
Hydraulic jack with pump	77%
Pumps (piston)	78%
Hydraulic accumulator	91%
Hydraulic lift, working rapidly	50%
Hydraulic cranes, all losses taken	55%

Mechanical efficiency of engines, not varying appreciably with load, is often found by comparing an indicator diagram taken 'running light,' with that under working conditions.

We will close this chapter with a few comparisons of power transmitters:

COMPARISONS OF THE ADVANTAGES AND DISADVANTAGES OF TRANSMITTING POWER BY VARIOUS METHODS.

Advantages.	*Disadvantages.*
1. LINKWORK.	
Useful in modifying power and obtaining special motions, as with valve gear, parallel motions, &c. Coupling rods a case of pure transmission.	Dead points often occur, to be overcome by force or chain closure. Will only transmit over very short spaces.
Frictional loss slight	... but depends on number of joints.

Digitized by Google

Advantages.	*Disadvantages.*
2. Shafting.	
Useful in connection with belt and spur gearing as a distributor from central motor to machines. Practically noiseless. Will transmit *across* moderate distances only, unless used in relays, viz. with belt gearing and countershafts.	Frictional loss about 25°/₀ to 50°/₀ in a large shop system: might be smaller with well-lubricated bearings. Loss proportionately large with light loads. (*See Appendix II., p.* 864.) Inconvenient for turning corners, though Hooke's joint may be employed for small deviations.
3. Spur Gearing.	
For positive transmission. A good modifier of power. No pressure on bearings due to wedge action, if teeth are well-formed. Only pressures are due to weight of wheels and unbalanced moment. The former often considerable, but the latter not present in all cases.	Frictional loss in single gear about 10°/₀, in double gear 20°/₀, and in treble gear 30°/₀. Not suitable for long distances, except in conjunction with line shafting and bevel gearing. Noisy, especially if much reversed. Teeth break under shock for want of slip, unless a slipping clutch be introduced. Breakage due to excessive backlash rather than heavy load.
4. Bevel Gearing.	
Assists shafting in turning corners, and modifies at the same time, if required. Is therefore useful in connecting parallel shafts considerably separated. Should not be used if belting or spur gearing will serve (see Fig. 476).	Frictional loss quite as great as with spur gearing, for teeth are difficult to cut by machine, and are rarely well formed. Noisy for similar reasons. Oblique pressure on bearings.
5. Worm Gearing.	
Gives a high velocity ratio with few parts. Non-reversible if the ratio be greater than 8 : 1, and therefore serves as a safety gear in cranes and such appliances. Practically noiseless.	Frictional loss 10°/₀ to 70°/₀. The former result has only once been reached, with exceptionally well cut teeth, and the worm in an oil bath. 50°/₀ is a good average. Machine-cut teeth (p. 274) should be used wherever possible.

5*a*. Screw Gearing.

Comes under the last head.

Digitized by Google

Advantages.	*Disadvantages.*
6. Belt Gearing.	
Useful in connection with shafting as a distributor and modifier with comparatively few parts.	Frictional loss principally in the line shafting: about 25°/₀ to 50°/₀ in a shop system.
Easily started and stopped.	Large belts with heavy pressures are expensive to maintain.
Practically noiseless.	
Very convenient for bridging reasonable distances.	
Large pull on bearings, but in well-lubricated bearings friction does not depend on pressure.	
Slip an advantage in case of shock.	Slip a disadvantage where exact velocity ratio is required.
7. Cotton-rope Gearing.	
For fairly long-distance driving in mills, and for travelling cranes.	Frictional and other losses probably somewhat larger than with belt gearing, due to heavy pullies and flywheels.
Better grip than belts, due to wedge-groove pulleys.	Working speeds being high, rope tension is increased 50°/₀ by centrifugal force: but bearing pressures are not thereby affected.
Quite noiseless.	
Separate driving to the various floors of a mill occasions less loss of time in breakdowns.	
Small liability to break down also.	
8. Wire-rope Gearing.	
Suitable for very long distances, say for several miles, when relays are adopted. Cases quoted in text.	Frictional and other losses 22°/₀ per mile, not including motor and machines: lesser and greater distances in proportion.
If moderate speeds be employed, little increased tension from centrifugal force.	
9. Pitch-chain Gearing.	
As useful as belt driving in decreasing the number of parts while modifying the power: but gives at the same time positive transmission, and may be used with heavy loads.	Frictional loss depends very much on design and manufacture, and probably varies from 5°/₀ to 30°/₀ in a pair of wheels: there being two sets of friction surfaces, not including the journals.
Adapted for high as well as low speeds if well made, but the former should go with light pressures.	Increase of pitch after wear causes excessive friction and bad working.

Digitized by Google

Advantages.	*Disadvantages.*
10. Friction Gearing.	
Almost noiseless and non-vibrating. Advantage of slip when shocks are received. Useful for high speeds.	Frictional loss about the same as for belt driving to shafting, but comparatively small with one pair of wheels. Unequal wear. Large pressure on bearings; decreased in nest gearing.
11. Compressed-air Transmission.	
Of great value for long-distance transmission in close workings. Better than hydraulics when high speeds are required in piston motors.	Loss by cooling varies from 70% under bad conditions to 20% with re-heating and air injection. Loss per mile by friction about 5%.
12. Hydraulic (Water Power) Transmission.	
Suitable for long distances. More especially useful for intermittent demand in power distribution, and the concentration of immense power by aggregating storage. Leakage slight. Inertia an advantage sometimes, as in riveting machines. Losses slight if low velocities are taken, say 15% in usual machines; 5% per mile due to friction in pipe.	Unsuitable for continuous work. Uneconomical with high velocities and reversible motion, on account of shock due to inertia. (Damage obviated by relief valves.) Velocity should be kept down to 4 or 6 ft. per second usually, and slow moving rams adopted, necessitating multiplying gearing. Piston engines run at 60 or 80 ft. per m. but are usually wasteful.
13. Electrical Transmission.	
Especially suitable for long distances. Wires may be conducted in any direction. No moving parts in line of transmission. Easy subdivision of power. May be stored by Faure cells.	Loss in line varies as the square of the current used (C^2R): hence high voltage is adopted for long lines, giving an economic loss of from 5% to 40% in the line. Loss in dynamos from 5% to 20% each, of the energy intrusted to them. Storage cells, being heavy, are not really suitable for transportation purposes. Loss in charging, &c., about 35%.

(*See Appendices II. and III.*)

Digitized by Google

CHAPTER X.

ON HEAT AND HEAT ENGINES.

It is customary, in dealing with any branch of Natural Science, to collect known facts from time to time, in order to devise a general *Theory* of explanation, which may serve as a basis for further investigation. Two such theories we shall now describe.

The **Molecular Theory** supposes that matter is discontinuous, its limit of mechanical divisibility being the minute particle termed a *molecule*. Chemists show that some molecules are compound, being further divisible by chemical means into *atoms*.

The **Dynamical Theory of Heat** teaches that heat is not a substance, but a *condition* of matter: being a 'pendulum' motion of the molecules, never entirely absent, even during extreme cold, but increasing with the intensity of heat, the latter being, in fact, due to the motion. In solids, the molecules are very close together and their excursions small, being limited by mutual attraction or *cohesion;* in liquids, they glide about and change positions by but slight external force; while in gases, the heat energy overcomes the cohesive or molecular forces, and the particles fly out to any distance when allowed to do so.

Black taught the *caloric* or material theory of heat in 1798, but Rumford and Davy, in 1802, showed that heat could be produced inexhaustively by solid friction, and thus proved it identical with motion. A little thought will suggest many cases where work and heat are interchangeable.

Transfer of Heat.—When a hot and cold body are placed in juxtaposition, heat passes from the former to the latter till

Digitized by Google

both have equal temperatures. Such transference may occur by radiation, conduction, or convection.

Radiation is the passage of heat between substances not in contact, *without at the same time raising the temperature of the intervening medium.* Thus a fire may heat surrounding solids, and the air receive its heat from the solids in turn. To explain radiant heat, a fluid of infinite tenuity is imagined, called *the Ether*, filling space and the interstices of matter, and transmitting radiant heat, by wave motion, without increasing molecular motion. If, however, the undulations be arrested, the energy is absorbed as molecular motion, and becomes apparent in the arresting body as heat. Radiation is an aid to heat dispersion, as in heating apparatus, but a disadvantage with boilers and steam cylinders, there causing loss. Good radiators must therefore be adopted in the former, and bad ones for the latter case. Good radiators are good absorbers, to an equal degree, and reflecting power is the exact inverse of radiating power.

RELATIVE VALUE OF RADIATORS.

Substance.	Relative Radiating Value.
Lampblack or soot	100
Cast iron, polished	26
Wrought iron, polished	23
Steel, polished	18
Brass, polished	7
Copper, polished...	5
Silver, polished	3

Conduction is the transfer of heat by contact, molecular motion being then directly caused. Heat is thus transmitted through the thickness of a furnace tube. There are good and bad conductors, the former being chosen for fireboxes, other properties being suitable. (*See Appendix II.*)

Digitized by Google

RELATIVE VALUE OF GOOD CONDUCTORS.

Substance.	Relative Conducting Value.
Silver	100
Copper	73·6
Brass	23·1
Iron	11·9
Steel	11·6
Platinum	8·4
Bismuth	1·8
Water	·147

Bad conductors are of value for clothing boilers, steam cylinders and pipes, &c. (*See p.* 902.)

RELATIVE VALUE OF BAD CONDUCTORS (OBSTRUCTORS).

Substance.	Relative Obstructing Value.
Silicate cotton or slag wool ...	100
Hair felt	85·4
Cotton wool	82
Sheep's wool	73·5
Infusorial earth	73 5
Charcoal	71·4
Sawdust	61·3
Gasworks breeze	43·4
Wood, and air space	35·7

Convection is a means of transmitting heat to liquids and gases. A flask of water being placed over some heat source, the lower or heated portion of the water becomes lighter and rises to the surface, up the vertical centre-line, only to become cool again and flow down the sides to the bottom. Thus are continuous 'convection' currents formed, which soon distribute heat throughout the liquid. Similarly also is the air of a room

Digitized by Google

heated: the fire, near the floor, rarefies the immediately surrounding air, which rises to the ceiling and falls again when cooled against the walls. Water, being a bad conductor, cannot well be heated by any but the convection method, hence the adoption of a low position, in a boiler, for the fire-grate.

Expansion is the result of the application of heat to all bodies, whether solid, liquid, or gaseous; the first being least and the last most expansible. Many examples may be suggested of the application of this law, some useful and some detrimental. Shrinking of gun coils is of the former type, while the endlong clearance between rail lengths of the permanent way avoids the injurious effects of the summer heat. Fig. 327 shows how work might be done by the expansion of solids. Water, between 32° and 39·1° F., is an exception to the law of expansion; during that period it contracts as the temperature increases. Cast iron also expands when solidifying in the mould, and bismuth and antimony follow the same rule; gold, silver, and copper contract.

Measurement of Heat.—We proceed to measure *intensity* and *quantity* of heat, bearing in mind, however, that heat is not a substance but a form of energy.

Temperature is a measure of the *intensity* of heat, being registered on a thermometer or pyrometer. Thermometers are based on the expansion of liquids or gases in a glass bulb, which then rise in a capillary stem from which air has been exhausted. Mercury or alcohol are the usual liquids, the former for ordinary and comparatively high temperatures, and the latter for very low temperatures: the boiling point of mercury being very high, and the freezing point of alcohol unknown. The freezing and boiling points of water, under atmospheric pressure, being unchangeable, are first marked on all thermometers, after which the graduations are spaced according to one of the following methods:

Thermometer.	Divisions between Freezing and Boiling.	Freezing Point.	Boiling Point.
Fahrenheit ...	180	32°	212°
Centigrade ...	100	0°	100°
Réaumur ...	80	0°	80°

Digitized by Google

Réaumur divisions are adopted in Russia; those of the Centigrade by scientists and the Continental public; while Fahrenheit divisions, being used by English engineers and the English-speaking public generally, will therefore be adopted in this work, and the Fahrenheit degree be looked upon as the *unit of intensity*. Centigrade readings can be translated into Fahrenheit and *vice versâ*, by the following simple formulæ:

$$F^\circ = (C^\circ \times \tfrac{9}{5}) + 32 \quad \text{and} \quad C^\circ = (F^\circ - 32)\tfrac{5}{9}.$$

Pyrometers are required to measure excessive temperatures, such as those of furnaces; they are discussed on page 587.

Air thermometers are of advantage in experiments of great delicacy, because small increase of heat will cause large expansion of air. The instrument is usually laid horizontally, and has a small index of coloured sulphuric acid, as at C, Fig. 601, which is moved along the tube by the expanding air, the end B being open to the atmosphere. The reading is considerably affected by change of atmospheric pressure, so the barometer reading must always be taken, and a correction made to standard pressure. The expansion of gases is more perfect than that of liquids.

Quantity of Heat.—More or less heat motion may exist in a body, depending on mass, heat capacity, and temperature. *The British Thermal Unit* (B.T.U.) *is the amount of heat required to raise the temperature of a pound of water through one Fahrenheit degree*, the water being near its greatest density 39·1° F. This unit represents an amount of energy equal to 772 foot pounds.

Specific Heat.—But some bodies have greater capacity for heat than others, that is, weight for weight, will absorb more heat for a definite rise of temperature. Taking capacity for water as 1, the relative capacity of another substance, called its *Specific Heat*, is therefore *the amount of heat in thermal units required to raise the temperature of a pound of the substance through one degree F.* Bunsen's ice calorimeter has been used to determine various specific heats, but we shall describe the *method of mixture*, which is precisely the same in principle. The body, being regularly heated in a bath of steam, is removed, and put in a vessel containing a measured weight of water at a certain temperature.

Digitized by Google

When the body and the water are in thermal equilibrium, the final temperature of the mixture is taken. Then, if

w = weight of the body in lbs.
w_1 = weight of water in lbs.
s = specific heat of the material.
s_1 = specific heat of water = 1.
$t°$ = temperature of body after steaming.
$t_1°$ = temperature of water at first.
T° = final temperature of the mixture.

Heat lost by body = Heat gained by water.

weight × spec. ht. × fall of temp. = weight × spec. ht. × rise of temp.

$$w s (t° - T°) = w_1 s_1 (T° - t_1°),$$

shown graphically at A, Fig. 598. Inserting known values, that of

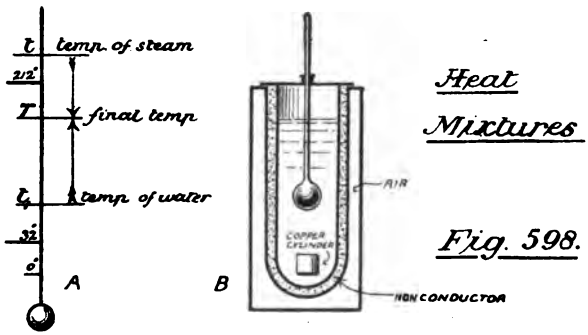

s may be found, the following table being obtained by this and other methods.

SPECIFIC HEATS OF VARIOUS SUBSTANCES.

Water at 39·1°	1·00	Wrought iron	·113
Water at 212°	1·013	Steel	·116
Ice at 32°	·504	Copper	·095
Steam at 212°	·48	Coal	·24
Mercury	·033	Air	·238
Cast iron	·13	Hydrogen	3·404

Digitized by Google

Example 58.—Find the specific heat of copper from the following data :—Half a pound of copper is heated to 212°, and being plunged into a pint (20 oz.) of water at 60°, raises the temperature of the latter to 65½°.

$$s = \frac{w_1 s_1 (T° - t_1°)}{w (t° - T°)} = \frac{20 \times 1 (65{\cdot}5 - 60)}{16 \times {\cdot}5 (212 - 65{\cdot}5)} = \underline{{\cdot}0938}$$

Pyrometers, for measuring very high temperatures.—Wedgewood's and Daniell's, based on expansion of solids, are now obsolete. Siemens' electric pyrometer measures the resistance of a circuit, which varies directly as the temperature of the wire. Wilson's and Siemens' water pyrometers depend on the method of mixtures. A cylindrical vessel of sheet copper, clothed with felt to retain heat, is provided with a cover and thermometer (see B, Fig. 598). A small solid cylinder of copper, of known weight, being placed in the furnace whose temperature is required, is shortly removed, and plunged into the water of the pyrometer, when the latter is closed. The final temperature of the pyrometer water being observed, that of the furnace can be deduced. (*See Appendix II.*)

Example 59.—Find a furnace temperature by water pyrometer from the following data :—Quantity of water = 1 pint, its first temperature 65° ; weight of copper cylinder = 4¼ oz. ; final temperature of water = 77·5°

$$w s t° - w s T° = w_1 (T° - t_1°)$$

$$\therefore t° = \frac{w_1 (T° - t_1°) + w s T°}{w s} = \frac{\frac{20}{16} \times 12{\cdot}5 + \frac{4{\cdot}25}{16} \times {\cdot}095 \times 77{\cdot}5}{\frac{4{\cdot}25}{16} \times {\cdot}095} = \underline{696{\cdot}6°}$$

Expansion of Gases.—Two laws govern the varying volume of a gas, according to whether temperature or pressure be kept constant.

The first law of gas expansion, discovered by Boyle in 1662, and verified by Marriotte in 1676, states that *the volume of a given portion of gas varies inversely as its pressure, if the temperature be constant.* Shown by symbols :

$$V \propto \frac{1}{P}, \quad \text{and } PV = \text{a constant.}$$

The relation of P and V is shown by diagram in Fig. 599, the ordinates $P P_1$ of the curve representing pressures, and the

Digitized by Google

abscissæ V V_1 corresponding volumes, a temperature $t°$ being maintained. Only one curve, the *rectangular hyperbola*, has ordinate × abscissa constant throughout, and that is the form of the curve AB. Although always approaching the co-ordinates OC, OD, it only meets them at infinity.

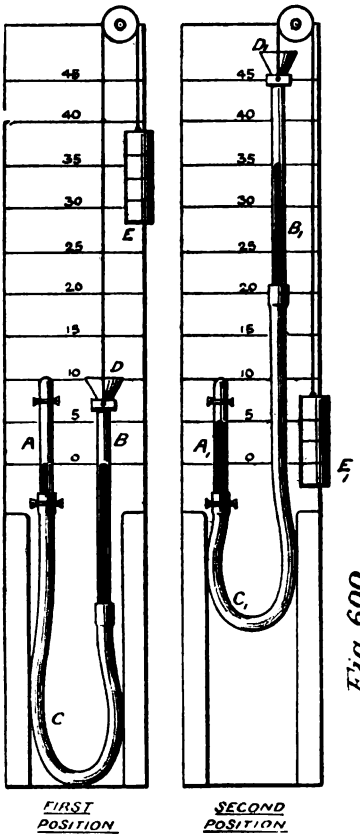

Fig. 600.

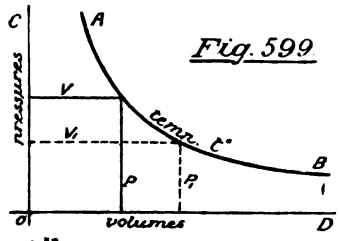

Fig. 599

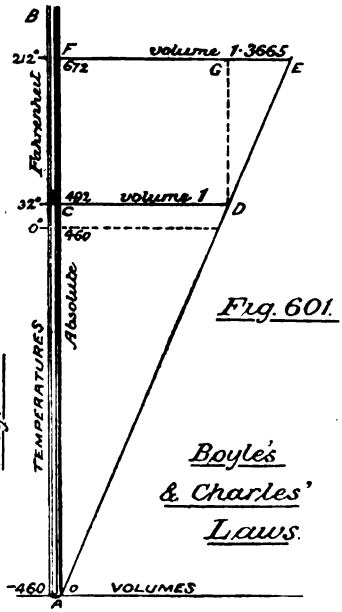

Fig. 601.

Boyle's & Charles' Laws.

Isothermals.—By reason of equality of temperature, AB is also known as the *isothermal of a perfect gas*, that is, of a gas following Boyle's law perfectly. Marriotte's tubes, Fig. 600, prove fairly well the accuracy of this law. A and B are strong

Digitized by Google

glass tubes, A being sealed at top, level with mark 10, and C is a stout though flexible rubber tube. Taking the first position, mercury is poured into the funnel D until about level with 0, and a final adjustment made by moving B up or down. The portion of air imprisoned in the leg A, supports a pressure of *one atmosphere*, D being open, and has a *volume of* 10 *ins.*

Raise B until the mercury reaches 35", and the fluid in A will have risen to 5". The difference of mercury levels is now 30 ins., representing an additional pressure of one atmosphere: so the air now supports *two atmospheres*, and has a *volume of* 5 *ins.*, or $P \times V$ is constant. Intermediate experiments can easily be obtained, and the law more generally proved. The so-called permanent gases are practically perfect, and others fairly so, if measured at a much higher temperature than that of liquefaction.

The second law of gas expansion was discovered by Charles in 1787, published by Dalton in 1801, and by Gay-Lussac in 1802, all independently. The last-named completely verified the law, which states that *the increase in volume of a given portion of gas varies directly as the increase in temperature, if the pressure be constant;* or, if V be the original volume, V_1 the increase, V_2 the total volume after increase, and $t°$ the rise in temperature,

$$V_1 \propto t°, \quad \text{and } V_1 = V \times \alpha\, t°$$

α being the *coefficient of cubical expansion.* V and α are constants, and $t°$ the only variable;

$$\therefore\ V_2 = V + V_1 = V + V\alpha\, t° = V\,(1 + \alpha\, t°).$$

The coefficients of linear expansion for solids, p. 369, vary with the substance, as do also their cubical coefficients (being three times the linear ones); but all gases not only expand *regularly*, but each to the same amount, increase of temperature being equal, one coefficient serving for all. Between 32° and 212° the total expansion is ·3665 V or $\frac{·3665}{180}$ = ·00204 for each degree; figures found by Gay-Lussac, expanding the air in an air thermometer, the bulb dipping in heated water, whose temperature was taken by mercury thermometer.

Absolute Zero of Temperature.—Let AB, Fig. 601, be an air thermometer with an air-tight piston C, and let the volume

Digitized by Google

AC be called 1, the temperature being 32°. Set off ordinate CD for volume at 32°, and FE for that at 212°. The latter will be 1·3665, and the gradual volumetric increase be shown by the *straight* line DE. Supposing the law true for extreme limits, line DA (a production of DE) will mark out the volume as we decrease the temperature, ultimately meeting AB in A. Then, at A, *the volume will have decreased to nothing, and all the heat will have been taken out of the air.* Though these possibilities are absurd, their supposition enables us to fix a zero point having important advantages in thermo-volumetric calculations.

To find A, the absolute zero of temperature, we proceed by similar triangles:

$$\frac{AC}{CD} = \frac{DG}{GE} \text{ and } AC = \frac{DG \times CD}{GE} = \frac{180 \times 1}{\cdot 3665} = 492 \text{ about,}$$

$$\therefore \text{ A's reading} = 492 - 32 = \underline{460° \text{ below zero F.}}$$

Any ordinary temperature F. may, then, be made absolute by adding 460, and while $t°$ indicates Fahrenheit readings, τ will show absolute readings.

Note that Fig. 601 is a graphic statement of Charles' law, AE being an *isopiestic* or line of constant pressure, as AB, Fig. 509, is a line of constant temperature.

Combination of Boyle's and Charles' Laws.—PV is invariable for any particular position on the thermometric scale; but if $t°$ be raised, the value of PV will be raised also. In Fig. 601, if P be kept constant V will vary as τ; so if V increases at the same rate as τ, any series of multiples of V will similarly increase; and as P would be such a multiplier in Fig. 601,

$$\therefore \underline{PV \propto \tau} \quad \text{and} \quad \underline{PV = c\tau,}$$

which is strictly general, c being a coefficient depending on the gas.

Taking one pound of air at a *temperature of* 32°, *and at atmospheric pressure*, reckoning in lbs. per sq. ft. and in cubic feet, Regnault found by experiment that

$$PV = 26{,}214 = c\tau, \qquad \therefore c = \frac{26{,}214}{32 + 460} = 53{\cdot}28.$$

For superheated steam $c = 85{\cdot}5$ (proven later).

Digitized by Google

The above formula gives P or V at any temperature, when c is known.

Three States of Matter.—These, the solid, liquid, and gaseous, are well understood, and it is also now admitted that all bodies are capable of existence in each state successively, though not necessarily at the normal pressure and temperature. Taking one pound of any substance and applying the specific heat due to its state, its temperature rises one degree, and as the specific heat is approximately regular for each state, practically the whole heat is registered on the thermometer. But in all substances two critical points occur called the points of *fusion* and *evaporation*, and known respectively in the case of water as the 'freezing and boiling points;' at these points additional heat is absorbed merely to do the work of re-arranging the molecules, of fusing or melting on the one hand, and of evaporating on the other hand. Such 'latent' heat is not observable on the thermometer, and must, therefore, be otherwise detected.

Latent Heat *is the quantity of heat units absorbed or given out in changing one pound of a substance from one state to another without altering its temperature.* This phenomenon, first observed by Black about 1757, will now be demonstrated in the case of water, and the units measured.

Latent Heat of Water is that required to melt one pound of ice at 32° F. Provide a vessel with felt-covered sides, similar to that at Fig. 598. Fill it with water of known weight (w) and temperature ($t°$). Take a piece of ice which has begun to melt, wipe dry, weigh (w_1), place in the water, and close the apparatus. When the ice is quite melted, gently stir, and measure the final temperature (T°), which may be a few degrees above 32°. Let L_h = the latent heat of water; then

Heat lost by water = Heat gained by ice

weight × fall of temp. = weight × (latent ht. + rise of temp.)

$$w\,(t° - T°) = w_1\,\{L_h + (T° - 32°)\}.$$

Supposing 20 oz. of water at commencement, at 60°, and 2 oz. of ice at, of course, 32°; the final temperature being 45°, then

$$20\,(60 - 45) = 2\,(L_h + 45 - 32),$$

$$\text{and } L_h = \frac{300 - 26}{2} = 137 \text{ units.}$$

Digitized by Google

Supposing, further, that one degree in the final temperature has been gained by radiation from the room, 44 will be the temperature due to mixture,

$$20\ (60 - 44) = 2\ (I_h + 44 - 32)$$

$$I_h = \frac{320 - 24}{2} = \underline{148 \text{ units.}}$$

The correct result should be 144 units, only obtained with careful preliminary radiation experiments.

Latent Heat of Steam.—In Fig. 602 water is boiled in flask A, and steam then passed by tube B to flask C, where B dips into water. The screen D is to prevent radiation from A to C,

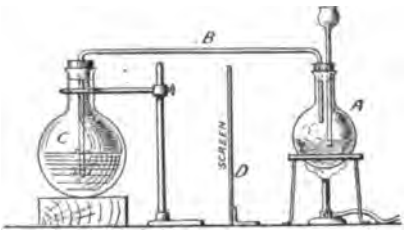

Latent heat of Steam

Fig. 602.

and the experiment is continued till the water nearly boils in C. Weighing C both before (w_1) and after the experiment, the difference is the amount of steam condensed (w). Then,

$$\text{Heat lost by steam} = \text{Heat gained by water,}$$

$$w\ \{(212 + I_h) - T^\circ\} = w_1\ (T^\circ - t_1^\circ).$$

Suppose the weight of water is 20 oz. at temperature 70°, the weight of steam condensed $1\frac{1}{2}$ oz., and the final temperature 146°, a loss of 1° occurring by radiation.

$$1{\cdot}5\ (212 + I_h - 147) = 20\ (147 - 70),$$

$$\therefore\ I_h = \frac{1540 - 97{\cdot}5}{1{\cdot}5} = \underline{961{\cdot}6 \text{ units.}}$$

The exact value is 966 units.

It should be well grasped that latent heat is a kind of specific heat given to the body *during* the change from solid to liquid and

Digitized by Google

from liquid to gaseous. In the reverse order an equal quantity of heat is *given out.* Thus, 1 lb. of ice below 32° will give out or absorb ·5 unit for every degree, and 144 units when melting. Water between 32° and 212° will require 1 unit per lb., approximately, for every degree, but when evaporating absorbs 966 units per lb. Finally, if the steam be *superheated* beyond 212°, ·48 unit will raise each lb. by one degree at a time.

Fig. 603 shows the changes indicated, A B C being the curve of volumes, with D E F as base, and the dotted line a curve of corresponding temperatures. The base-line lengths indicate units of heat required to change both volume and temperature under atmospheric pressure. The volume at F is too great to be shown on the diagrams, but is given to a smaller scale at G.

Saturation and Boiling Points.—If a boiler be open, the steam is formed under atmospheric pressure, or **14·7 lbs. per sq. in.**, which it exactly balances; and its temperature will be 212° F. By covering the orifice with a weighted valve, steam is formed at a higher temperature, because under greater pressure If the water be boiled in a partial vacuum, the temperature will be below 212°, because the pressure is relieved. When ebullition first commences, and steam is emitted (see E, Fig. 603), the boiling point is reached; and the temperature has a definite value in accordance with the pressure. The steam now forming is in contact with the water, and, being more or less full of watery particles, is called *Wet Saturated Steam.* The latent heat is gradually absorbed; and, when fully taken up—namely, when all the water has *just* boiled away—the *saturation point* is reached, and we have *Dry Saturated Steam* (see F, Fig. 603). Applying heat still further without further supply of water, expansion takes place (approximately) according to Gay-Lussac's formula, and the steam is said to be superheated. The boiling and saturation points then, although having the same temperature, by no means represent the same condition. In practice, dry saturated steam is only approximated to by providing domes to boilers, to take the steam as far from the water as possible. (*See Appendix II.*)

Besides having specific temperature and pressure, dry saturated steam has a specific volume. In Fig. 603, the volume of steam to that of water is 1650 : 1, called its *relative volume*, while

Digitized by Google

the volume of 1 lb. weight is 26·36 cubic ft., termed the *specific volume.*

Def. 1.—**The Saturation Point** *is attained when all the latent heat required for the steam has been taken up.*

Def. 2.—**The Boiling Point** *occurs when the tension in the water overcomes the surrounding pressure.*

Def. 3.—**Dry Saturated Steam** *is that which has a specific volume, pressure, and temperature, corresponding to its complete formation.*

Def. 4.—**Wet Saturated Steam** *is in process of formation, and is in contact with the water.*

Def. 5.—**Superheated Steam** *is that which has its temperature raised above formation point.*

Def. 6.—**Specific Volume** *is the number of cubic ft. to the lb. weight, and* SPECIFIC DENSITY *is the number of lbs. in a cubic ft.*

Dryness Fraction.—If the weight of water particles in a given volume of wet steam be measured by suitable apparatus, the *proportionate wetness* will be shown when that weight is divided by the total weight of dry steam and water particles; while the *proportionate dryness*, or

$$\text{Dryness fraction} = \frac{\text{weight of dry steam}}{\text{weight of steam and water}}$$ (*See Appen. I. and II.*)

Curves of Saturation Points.—The comparison of temperature and pressure of dry saturated steam has been proved by experiment. From − 22° to 32°, Gay-Lussac used the apparatus in Fig. 604. Both barometer tubes have vacua above the mercury, but B has a little water on the surface of the mercury, whose vapour pressure reduces the height of the column. As 1 in. of mercury represents about ½ lb. per sq. in., the pressure is therefore known. Various freezing mixtures successively surround the blind end of tube B, their temperature being shown by thermometer.

Fig. 605 was Regnault's apparatus for temperatures from 32° to 122°. As before, barometer A has a perfect vacuum, while B's vacuum is impaired by vapour rising from water lying on the

Digitized by Google

Fig. 603.

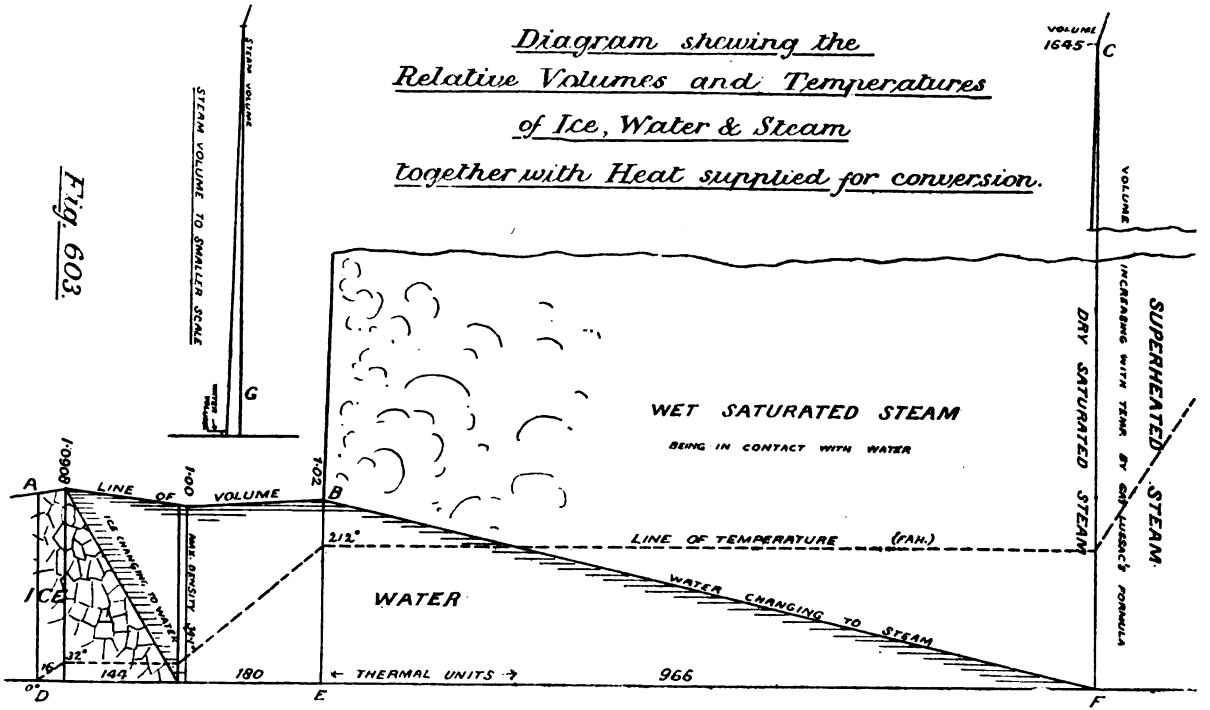

Digitized by Google

surface of the mercury. Both tubes are surrounded by heated water, whose temperature is shown by thermometer.

Regnault further found, as in Fig. 606, the temperatures and pressures of saturated steam between 122° and 219°, the experi-

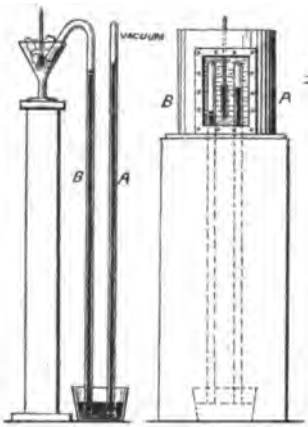

Fig. 605.

Fig. 607.

Temperature, Pressure, Volume, & Latent Heat of Steam.

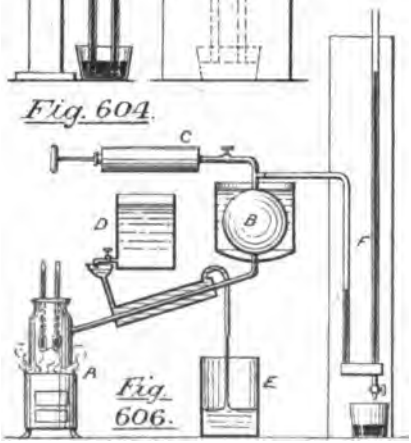

Fig. 604.

Fig. 606.

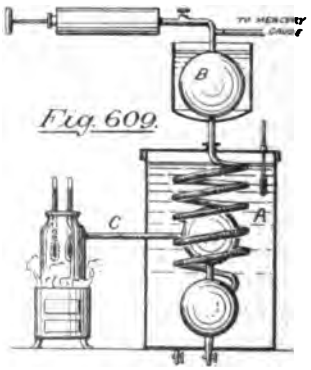

Fig. 609.

ment having since been carried to 432°. A is a boiler where steam is formed, and B a copper sphere containing an artificial atmosphere, produced by the condensing syringe C. As fast as steam is formed, it is condensed by water passing from D to E round the steam pipe; but this is a practical detail. Essentially the pressures in B and A balance, being measured by the open

Digitized by Google

syphon tube F, of great height for the highest pressure (twenty-four atmospheres). Four thermometers at A measure the temperature of the steam.

The relation between temperature and specific volume is shown by Fairbairn and Tate's experiment, Fig. 607. A glass globe A dipping its open stem into mercury in tube E, the latter is connected to a vessel B containing water. A small measured weight of water being placed in the stem of A, D and B are heated; and saturated steam forming in both A and B at equal temperatures (and equal pressures), the mercury levels are constant. But when water in A's stem evaporates, steam in A begins to superheat, and its pressure rising less rapidly than in B, the mercury levels separate. Just then the steam is dry, and the temperature, volume of A, and weight of water in A being known, specific volume may be deduced.

Fig. 608 shows the results of the above-described experiments. *Absolute pressures** are measured up the vertical centre line; to the right are the corresponding specific volumes, and to the left the temperatures Fahr. The former is also a curve of expansion for dry saturated steam—that is, steam *kept always at saturation point.*

Total Heat of Evaporation *is the quantity required to raise one lb. of water from* 32° *to a given temperature, and then evaporate it.* The investigation of total heats at various temperatures was successfully pursued by Regnault. Referring to Fig. 609, steam was passed through a coiled pipe (A) surrounded by water, to which the latent heat was given up; an artificial atmosphere being introduced at B, while thermometers showed temperature of both boiler and tank. From his results, Regnault devised the empirical formula:

$$\text{Total Heat} \quad \text{T.H.} = 1092 + \cdot 3(t^\circ - 32^\circ).$$

From which, deducting the sensible heat $t^\circ - 32^\circ$:

$$L_h = 1092 - \cdot 7(t^\circ - 32) = \underline{966 - \cdot 7(t^\circ - 212^\circ)} = 1115 - \cdot 7t$$

—formulæ serviceable both above and below 212° if the steam be saturated.

* Pressures from the 'vacuum line'; that is, from a condition of perfect vacuum.

Digitized by Google

Pressure, Temperature & Volume of Dry Saturated Steam.

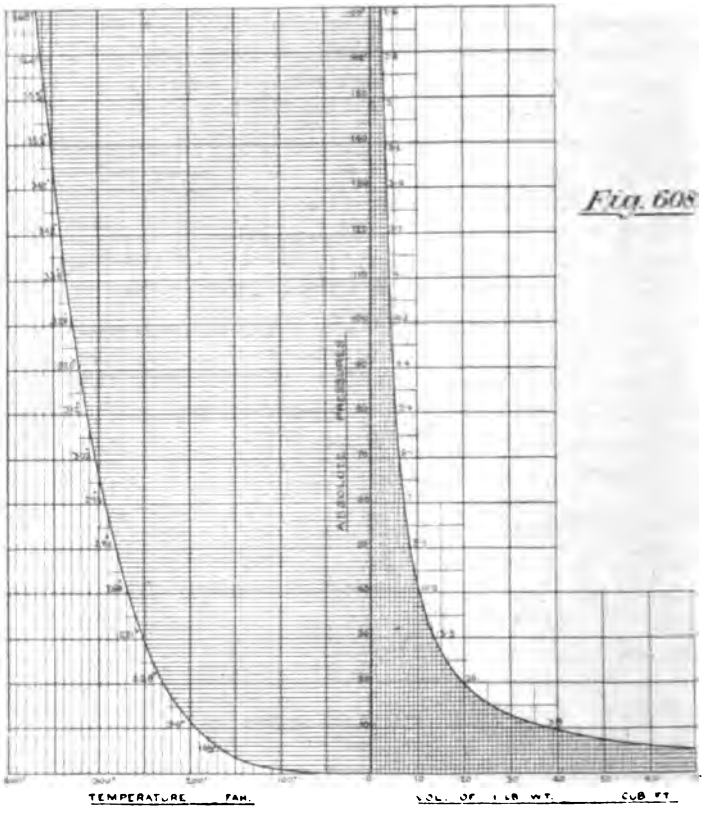

Fig. 608

Mixtures of Steam and Water.—We can now calculate the quantity of condensing water required with a given temperature of steam. For convenience, we shall measure from 0° Fahr., and omit the L_h of water.

Example 60.—The temperature of condensing water being 60° and that of the exhaust steam 193°; while the condenser remains at a temperature of 120°. Find the weight of condensing water per lb. of exhaust steam. (Hons. Steam Ex.)

Digitized by Google

Heat lost by steam = heat gained by water.

$$w\,(S_h + L_h - T) = w_1(T - t).$$

$$1\,[193 + \{966 - \cdot 7\,(193 - 212)\} - 120] = w_1\,(120 - 60).$$

$$w_1 = \frac{193 + 979{\cdot}3 - 120}{120 - 60} = \underline{17{\cdot}53 \text{ lbs.}}$$

Mechanical Equivalent of Heat.—We shall now briefly describe how Joule compared a quantity of heat with its mechanical or work equivalent. Rumford and Davy had made their friction-heat experiments on solids ; but Mayer, in 1842, heated water by

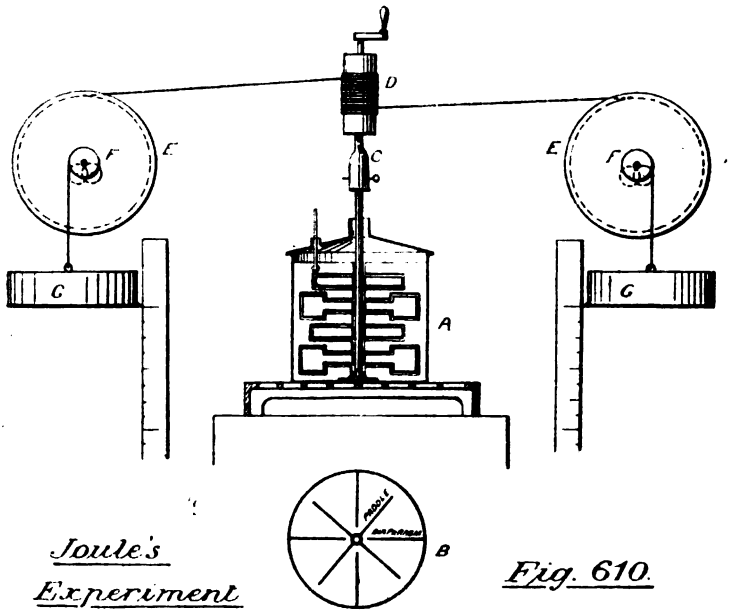

Joule's Experiment

Fig. 610.

mere agitation. Adopting the latter method among many others, Joule at the same time measured the work required to raise the temperature. A cylindrical copper vessel (A, Fig. 610) containing water, had diaphragms as at B, through slits in which paddles revolved on the vertical axis C. From roller D passed light cords to the large pulleys EE, upon whose axes were smaller pulleys FF.

Digitized by Google

From the circumferences of F F weights G G were hung, which, being allowed to fall, rotated the paddles and raised the temperature of the water. By repetition, the temperature of the water was raised to a measurable quantity, the work of the falling weights being simultaneously noted, until the average of many experiments gave the 'mechanical equivalent' as 772 foot lbs.* to one British Thermal Unit. We may now state the

First Law of Thermodynamics.—*Heat and mechanical energy are mutually convertible, and Joule's equivalent (J) is the rate of exchange.* (*See Appendix III.*)

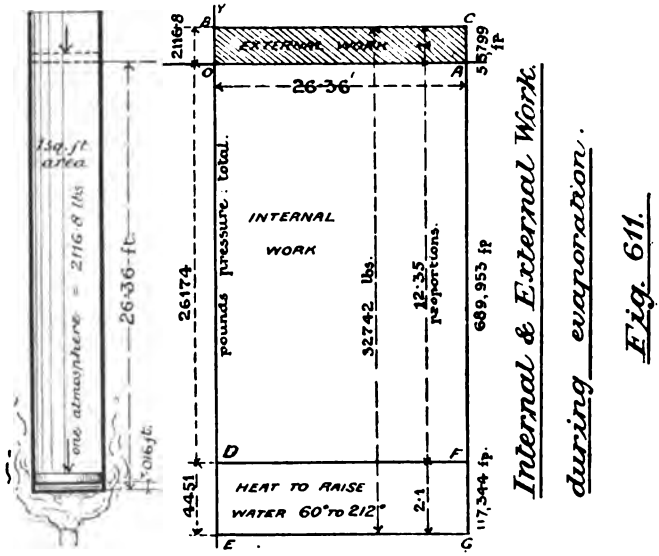

Internal & External Work during evaporation.

Fig. 611.

Internal and External Work during Evaporation.—In heating water and evaporating it:

1.—The temperature of the water has been raised.

2.—The water has been changed into steam at the same temperature.

3.—The volume of the water and steam has been increased against external resistance.

* Rowland's recent value, 778, is probably more nearly correct.

Digitized by Google

For one other change, the separation of the molecules during steam formation, Joule showed experimentally that no heat was required, so we need not further consider it.

Take the vertical cylinder, Fig. 611, of 1 sq. ft. base, and let 1 lb. of water at 60° lie within it, covered with a piston. Upon this piston there is a pressure of 1 atmosphere, or $(14{\cdot}7 \times 144)$ lbs. = 2116·8 lbs.

1 cubic ft. of water weighs 62·5 lbs.

$\therefore$ 1 lb. of water will stand at $\frac{1}{62{\cdot}5}$ = ·016 ft. high.

Specific volume of 1 lb. of steam at 212° = 26·36 cubic ft.* Heating from 60° to 212° does not materially change the water volume (see Fig. 603); but when all the water has become steam, the piston would assume the dotted position in Fig. 611, having risen 26·36 ft. against a pressure of 2116·8 lbs., thus absorbing 55,799 ft. lbs. of work. During formation, we know that 966 thermal units, or $966 \times 772 = 745{,}752$ foot lbs., have been required, so that $745{,}752 - 55{,}799 = 689{,}953$ foot lbs. have been used as *internal work* merely to change the state, and 55,799 foot lbs. have done *external work* against the atmosphere during that change. In addition, there have been required, to raise the temperature of the water, $212 - 60 = 152$ thermal units, or $152 \times 772 = 117{,}344$ foot lbs. Collecting these results, we have:

Sensible Heat.
1. 117,344 foot lbs. to raise water's temperature.

Latent Heat.
2. 689,953 foot lbs. to change from water to steam, as in a vacuum (internal work).
3. 55,799 foot lbs. to raise piston against atmosphere (external work).

Total, 863,096 = $\{966 + 180 - (60 - 32)\}\, 772$.

And the three values have the proportions 2·1 : 12·36 : 1.

* Specific volume of saturated steam at any other pressure is found from the formulæ of Rankine or Fairbairn respectively:

$$p V^{1\frac{1}{11}} = 475 \qquad (p + {\cdot}35)(V - {\cdot}41) = 389.$$

Digitized by Google

Commencing at O, Fig. 611, draw the co-ordinates OY, OX, for pressure and distance respectively. Measure 26·36 ft. at OA, and 2116·8 lbs. at OB; the rectangle AB then shows external work. Make OD and DE 12·36 and 2·1 times OB respectively; the area OF is the internal work during evaporation, and DG shows the work required to raise the water's temperature from 60° to 212°. Rectangle AB represents the only *useful* effect, the rest being expended on internal changes, and the

$$\text{Efficiency of the steam} = \frac{\text{external work}}{\text{total work}} = \frac{55{,}799}{863{,}096} = \underline{\cdot 0646}$$

Let us next examine the case of steam at 160 lbs. pressure (above atmosphere), as in triple-expansion engines.

1 lb. of steam at 174·7 lbs. per sq. in. absolute has a specific volume of . . . . . = 2·5 cub. ft.
Load on piston = 174·7 × 144 . . . . . = 25,156 lbs.
(1) External work = 25,156 × 2·5 . . . . = 62,890 ft. lbs.
Temperature of steam . . . . . = 370° F.
Latent heat = {966 − ·7 (370 − 212)} × 772 = 660,369 ft. lbs.
(2) Internal work = (660,369 − 62,890) . . = 597,479 ft. lbs.
(3) Heat to raise water's temperature
= (370 − 60) 772 = 239,320 ft. lbs.
And total work = (1) + (2) + (3) . . . = 899,689 ft. lbs.

$$\text{Efficiency of steam} = \frac{\text{external work}}{\text{total work}} = \frac{62{,}890}{899{,}189} = \underline{\cdot 07.}$$

Which proves that high pressure steam, *weight for weight* and *without expansion*, is not more economical than low pressure steam.

Specific Heats of a Gas.—As with other substances, these are the quantity of T. U. required to raise the temperature of 1 lb. weight through one degree F. But there are two methods of raising the temperature, the specific heat being a different quantity for each case. Assuming the gas enclosed in a cylinder and covered with a loose piston, we may, while supplying heat, (1) allow the piston to rise freely, or (2) fix it immovably. In (1) we are heating at *constant pressure*, and in (2) at *constant*

Digitized by Google

volume: the former requiring a larger heat supply than the latter, because external work is there performed in addition. Regnault found the *specific heat at constant pressure* (C_p) of any 'permanent gas,' like air, to be ·2375 thermal unit.

Using the piston and cylinder illustration, with 1 lb. of air at bottom, on a base of one square foot, as in Fig. 611. Then, as

1 cubic foot of air at 32° weighs ·0807 lb.

1 lb. of air will stand at $= \frac{1}{\cdot 0807} = 12\cdot4$ feet

under atmospheric pressure and temperature of 32°. Heat to 212°. Then, from Fig. 601,

Increase of volume = ·3665 × 12·4 = 4·54 feet,

which is also the rise of piston against 2116·8 lbs.

External work = 2116·8 × 4·54 . . . . . = 9510·27 ft lbs
Total work = rise in temp. × spec. ht. = 180 × ·2375 = 42·75 T.U.
= 33,003 ft lbs.
Internal work = 33,003 − 9510·27 = 23,492·73 foot pounds,
or 30·43 T.U.

But the last figure is the heat required to raise the temperature at constant volume through 180°.

$$\therefore \textit{Specific heat at constant volume} = \frac{30\cdot43}{180} = \underline{\cdot1672 \text{ T.U.}}$$

or, more correctly, may be taken at ·1686; and the ratio of the two specific heats,

$$\gamma = \frac{C_p}{C_v} = \frac{\cdot2375}{\cdot1686} = \underline{1\cdot408}$$

a number we shall require later.

We may also represent the specific heats of a gas in foot lbs., using symbol K instead of C. Then,

K_p = ·2375 × 772 = 183·35 foot pounds.
K_v = ·1686 × 772 = 130·16 foot pounds.

Regnault's Law.—*The specific heat of a gas at constant pressure is the same at all temperatures.* This is a most important law, showing that gases, unlike liquids, expand regularly for regular increments of heat.

Digitized by Google

Let us heat a gas under a constant pressure P, the volume being increased from V_1 to V_2, and the temperature rising from τ_1 to τ_2 absolute: then

$$\begin{aligned} \text{External work} &= P(V_2 - V_1) = c(\tau_2 - \tau_1) \\ \text{Total heat expended} &= \text{spec. ht.} \times \text{rise in temp.} \\ &= K_p(\tau_2 - \tau_1) \\ \text{and Internal work} &= \text{Total} - \text{External} \\ &= K_p(\tau_2 - \tau_1) - c(\tau_2 - \tau_1). \end{aligned}$$

But, when a gas is heated at constant volume, only internal work is done.

$$\therefore K_v(\tau_2 - \tau_1) = K_p(\tau_2 - \tau_1) - c(\tau_2 - \tau_1)$$
$$\text{and } \underline{K_p - K_v = c.}$$

Note that internal work is always K_v (final temp. – initial temp.), and may therefore be positive, negative, or nothing.

Specific Heats of Superheated Steam.—By experiment $K_p = 370{\cdot}56$ foot lbs., and as steam a few degrees above saturation point is a practically perfect gas, K_p will be a regular quantity. Further, if we are heating at constant pressure,

$$\text{For steam } PV_s = c_s\tau \qquad \text{For air } PV_a = c_a\tau$$
$$\text{or, } \frac{V_s}{V_a} = \frac{c_s}{c_a}.$$

Now the ratio of specific volumes $\frac{V_a}{V_s} = {\cdot}622$.

$$\therefore \frac{c_s}{c_a} = \frac{1}{{\cdot}622} \text{ and } c_s = \frac{c_a}{{\cdot}622} = \frac{53{\cdot}2}{{\cdot}622} = \underline{85{\cdot}5.}$$

Then $K_p - K_v = 85{\cdot}5$ and $K_v = 370{\cdot}56 - 85{\cdot}5 = 285{\cdot}06$ foot pds.

$$\text{Finally } \gamma = \frac{K_p}{K_v} = \frac{370{\cdot}56}{285{\cdot}06} = \underline{1{\cdot}3.}$$

Expansion Curves and their Areas.—The hyperbola, co-ordinating Boyle's law, has been shown at Fig. 599, and one other expansion curve, as these are called, has the formula $pv^n = c$, the exponent n changing with the substance. Now the shaded *area*, Fig. 612, shows the work done during expansion, and could

Digitized by Google

be actually measured (see Fig. 325); but as these curves have definite formulæ, it is easier to use algebraic methods. Then,

Area of curve having formula $PV = C$ is $PV \times \log_e \frac{v_2}{v_1}$

and as $PV = cT$, and $\frac{v_2}{v_1}$ = the ratio of expansion r.

$$\underline{\text{Area} = cT \log_e r.}$$

(Use hyperbolic logarithms, and see Fig. 612)

Area of curve having formula $PV^n = C$ is $\frac{P_1V_1 - P_2V_2}{n-1}$

Isothermals and Adiabatics.—If a gas expand, and advance a piston against a resistance, it does work requiring expenditure of heat. Such heat being abstracted from the gas, the temperature of the latter falls; but if heat be supplied just as fast as it is abstracted, viz. equal to the work done, the temperature will remain constant, the expansion be according to Boyle ($PV = C$), and the curve be called an *isothermal.*

If no heat be supplied, the pressure-volume curve will fall below the hyperbola, as in Fig. 613, according to the formula $PV^n = C$, and be then termed an *adiabatic.* Similarly, in compressing, the adiabatic will rise above the isothermal, because the gas becomes heated by work done *upon* it (Fig. 614). (*See Appendix II.*)

Adiabatic Exponent.—The value of n will now be found for the adiabatic.

$$\text{Area of curve} = \frac{P_1V_1 - P_2V_2}{n-1} = \frac{c}{n-1}(T_1 - T_2) = \text{External work.}$$

$$\text{Total work} = \text{Internal work} + \text{External work}$$

$$= K_v(T_2 - T_1) + \frac{c}{n-1}(T_1 - T_2)$$

$$= (T_2 - T_1)\left(K_v + \frac{K_v - K_p}{n-1}\right)^*$$

$$= (T_2 - T_1)\left(\frac{K_v(n-1) + K_v - K_p}{n-1}\right) = (T_2 - T_1)\left(\frac{nK_v - K_p}{n-1}\right)$$

* Notice change of sign in two places in order to balance.

Digitized by Google

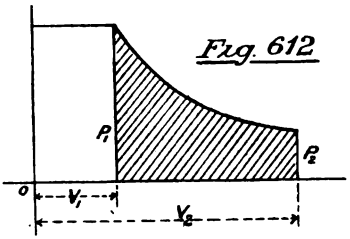

Fig. 612

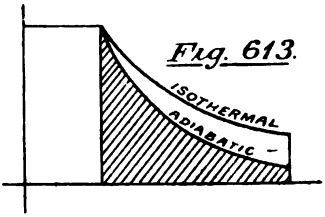

Fig. 613.

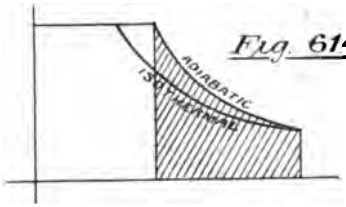

Fig. 614.

Expansion Curves.

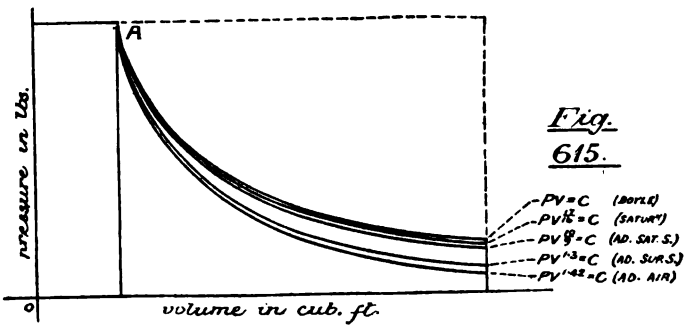

Fig. 615.

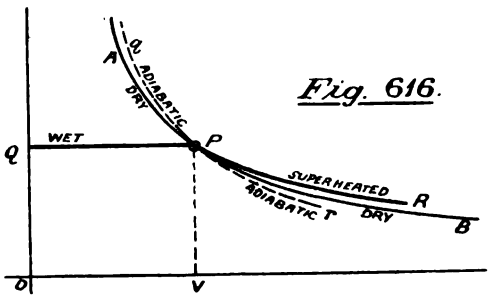

Fig. 616.

Digitized by Google

But in the adiabatic no heat is communicated from outside, and none taken away.

$$\therefore \text{ Total heat supplied } (\tau_2 - \tau_1)\left(\frac{n K_v - K_p}{n-1}\right) = 0$$

that is, one of the bracketed quantities is nothing. But $(\tau_2 - \tau_1)$ is tangible,

$$\therefore \frac{n K_v - K_p}{n-1} = 0 \qquad n K_v - K_p = 0$$

$$\text{and } n = \frac{K_p}{K_v} = \gamma$$

$\therefore PV^{\gamma}$ is the general equation for the adiabatic.

In adiabatic expansion, external work is done at the expense of the internal heat of the gas. (*See Appendix II.*)

Comparison of Temperatures in Adiabatic Expansion.—Suppose that by adiabatic expansion the temperature falls from τ_1 to τ_2:

$$P_2V_2^{\gamma} = P_1V_1^{\gamma} \quad \text{and } P_2V_2(V_2^{\gamma-1}) = P_1V_1(V_1^{\gamma-1})$$

$$\therefore P_2V_2 = P_1V_1\left(\frac{V_1}{V_2}\right)^{\gamma-1} \text{ or } c\tau_2 = c\tau_1\left(\frac{V_1}{V_2}\right)^{\gamma-1}$$

$$\therefore \tau_2 = \tau_1\left(\frac{1}{r}\right)^{\gamma-1} \text{ or } \tau_2 = \tau_1\left(\frac{1}{r}\right)^{\cdot 408} \text{ for air.}$$

Various Expansion Curves, as represented by their formulæ, may now be collected as follows:

For *isothermal expansion* of a perfect gas,

$PV = C$ (a true rectangular hyperbola).

For *adiabatic expansion* of a perfect gas,

$PV^{\gamma} = C$ ($\gamma = 1{\cdot}408$ for air): ($1{\cdot}3$ for superheated steam).

For *expansion of dry saturated steam*, without becoming wet or superheated; being the 'curve of saturation points,' Fig. 608,

$pV^{1\frac{1}{4}} = C = 475$ (Rankine's curve).

$(p + {\cdot}35)(V - {\cdot}41) = C = 389$ (Fairbairn's curve).

Both founded on Regnault's experiments.

Digitized by Google

For *adiabatic* expansion of *saturated steam*,

$$p V^{1.135} = C \quad \text{(Zeuner's curve).}$$

$$p V^{\frac{10}{9}} = C \quad \text{(Rankine's curve).} \quad \textit{(See Appendix I.)}$$

For *adiabatic* expansion of *superheated steam*,

$$PV^{1.3} = C$$

The above adiabatics represent the expansion of steam in a cylinder under good conditions. All starting from the same point, A, Fig. 615, the hyperbolic curve lies highest, then the saturation curve, the adiabatics for saturated and superheated steam respectively, and lastly the adiabatic for air.

Isothermals of Saturated Steam or other Vapours.—In Fig. 616, A B is the saturation curve, and P a point showing *dry saturated steam* at pressure P, volume V, and corresponding temperature. If V be decreased by compression, temperature being constant, some steam liquefies, P is kept constant, and the compression curve is P Q, the steam becoming *wet*. If, again, V be increased at constant temperature, the steam becomes superheated, and expands along P R, rising above the saturation curve P B, which is a curve of lowering temperature. Q P R is sometimes called the expansion curve of *dry* saturated steam—an incorrect description, for the steam is only dry at one point P. The adiabatic $q r$ has the formula $p V^{\frac{10}{9}} = C$, or $p V^{1.135} = C$. *(See App. I.)*

Cycle of Operations.—If a working gas be passed through a series of heat changes, and ultimately returned to its original condition, the changes constitute a *cycle*, and *external work* has been done equal to the *heat expended*, because the gas, reverting to its original state, will have returned the *internal work* first absorbed. The indicator card represents a particular cycle.

Carnot's Reversible Cycle or Perfect Heat Engine is the most perfect example of an engine cycle. It should be understood that the object of making changes upon a gas is to obtain external work from heat; and though Carnot's engine is unattainable in practice, yet its perfection should be approached as closely as possible by practical engines. All engines, Carnot's included, receive heat energy from some *hot body;* during expansion of the working substance, give external work to moving

Digitized by Google

mechanism; and, finally, reject a smaller quantity of heat into some *cold body*. In the steam engine these 'bodies' are the boiler and condenser respectively. We shall see that the efficiency of the engine does not depend on the working substance, if a reversible cycle be adopted, but only on the difference of temperatures between which the substance is utilised. A perfect heat engine should have the following qualifications:—

1. The heat must be received at the temperature of the hot body.
2. The heat must be rejected at the temperature of the cold body.
3. The cycle must be reversible.

For perfect working, it is clear that *all* heat represented by drop of temperature between the hot and cold bodies should be delivered to the engine as work. But if there be a fall of temperature between hot body and engine, or between engine and cold body, some heat will be lost on the way which does not reach the engine. Hence the reason for (1) and (2). We may explain (3) similarly, first premising that by *direct action* we mean the transformation of heat into work by abstraction of heat from hot body; *reversed action* being obtained by turning the engine backward, giving all the work back to the hot body. In a perfect engine, the work given by the gas during one direct cycle must equal the heat returned during one reversed cycle, which is to say, that *all* the 'available' heat must be transformed into work.

Carnot's cycle fulfils these three conditions, and none other can have a higher efficiency, as we shall prove. Fig. 617 is the ideal engine, having a non-conducting cylinder A, and piston B, the latter connected to suitable working mechanism. C is the hot body, E the cold body, and D a non-conducting cylinder-cover; and the underlying diagram indicates the changes we are now to follow. *First operation:* Commencing with a portion of gas behind the piston, at temperature T_1 (that of the hot body), pressure P_1, and volume V_1, we allow this to expand at constant temperature while doing work. Placing the left end of the cylinder on the hot body, the expansion curve is the isothermal

Digitized by Google

1 2. *Second operation:* The expansion is continued, without supply of heat, by placing the cylinder on the non-conducting cover; and the adiabatic curve 2 3 is traced, the temperature falling from τ_1 to τ_2, on account of work done by the gas. *Third operation:* Compressing the gas at constant temperature τ_2, we place the

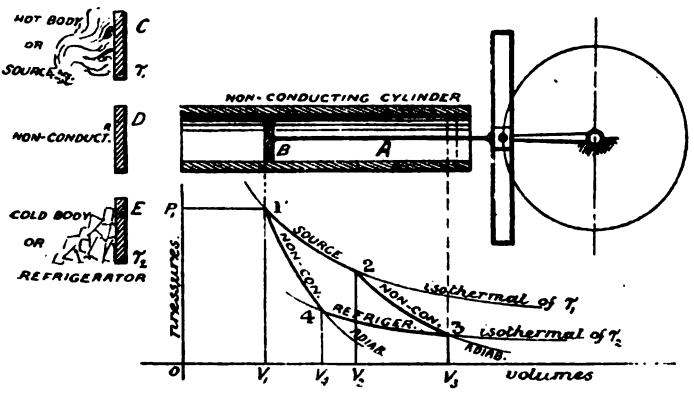

Carnot's Engine Fig. 617.

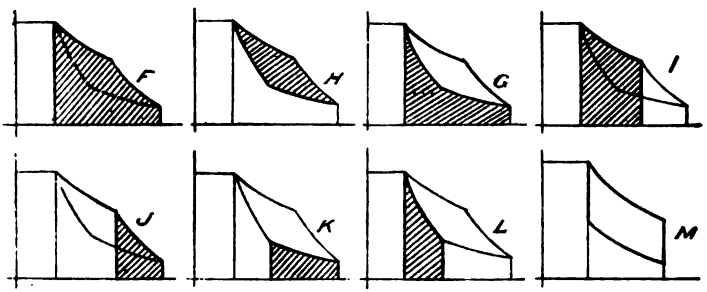

cylinder on the cold body, to receive such heat as must be rejected; and the curve obtained is the isothermal 3 4. *Fourth operation:* Finally, place the cylinder on the non-conducting plate and compress along the adiabatic 4 1; the substance is then returned to its original condition and temperature τ_1.

During these operations the work done *by* the gas is shown by diagram F, and that *on* the gas by diagram G, their difference

Digitized by Google

H being the effective work given to the engine. Reckoning the heat used, we have:

From 1 to 2 (r_1). *Heat expended*, being work area I,
$= P_1V_1 \log_e r_1 = c\tau_1 \log_e r_1$.

From 2 to 3 (r_2). *No heat expended*, external work, J, being done by abstraction of heat from the gas.

From 3 to 4 (r_3). *Heat rejected*, as at K,
$= P_3V_3 \log_e r_3 = c\tau_2 \log_e r_3$.

From 4 to 1 (r_4). *No heat rejected*, external work, at L, producing internal work on the gas.

We have previously found (p. 607) the comparison of temperature in terms of r, during adiabatic expansion or compression:

$$\tau_2 = \tau_1 \left(\frac{1}{r}\right)^{\gamma - 1}$$

from which may be deduced:

$$r = \left(\frac{\tau_1}{\tau_2}\right)^{\frac{1}{\gamma - 1}}$$

Referring to Fig. 617, expansion from 2 to 3 and compression from 4 to 1 are between the same temperatures, so the *ratio of adiabatic expansion equals that of adiabatic compression*: $r_2 = r_4$

$$\text{And as, } \frac{V_3}{V_2} = \frac{V_4}{V_1} \qquad V_1V_3 = V_2V_4 \qquad \text{and } \frac{V_2}{V_1} = \frac{V_3}{V_4}$$

Or the *ratio of isothermal expansion equals that of isothermal compression*: $r_1 = r_3 = r$, say.

Resuming; when the cycle is complete no internal work has been done—all is external work:

$$\therefore \text{ External work} = \text{Heat expended} - \text{Heat rejected}$$
$$= c\tau_1 \log_e r_1 - c\tau_2 \log_e r_3 = (\tau_1 - \tau_2)\, c \log_e r.$$

$$\textbf{Efficiency of Engine} = \frac{\text{Work done}}{\text{Heat expended}}$$

$$= \frac{(\tau_1 - \tau_2)(c \log_e r)}{\tau_1 (c \log_e r)} = \frac{\tau_1 - \tau_2}{\tau_1} \quad (\textit{See Appendices I. and II.})$$

It will be easily seen that for the highest efficiency, τ_2 must be nothing, or the condenser must have a temperature of 'absolute

Digitized by Google

zero,' a condition practically unattainable, and *all the heat in the working substance can never be utilised.* The energy obtainable is only that between the *available temperatures*, and the difference of T_1 and T_2 should therefore be as large as is practically possible.

Reversed Action occurs, as previously suggested, when expansion takes place along 1 4, 4 3, and compression along 3 2, 2 1, the operations being entirely the reverse of those just considered. External work is done *on* instead of *by* the gas, and heat is *taken from the cold body and rejected into the hot body.* No better practical example of a reversed cycle can be given than that of an air-compressing engine as at Fig. 562, p. 546.

Let it be possible to have an engine (No. 2) of equal power but higher efficiency than Carnot's (No. 1); and let No. 2 drive No. 1 in reverse order. Then No. 2, taking its heat from the hot body and rejecting into the cold body, and giving all its external work towards driving No. 1, the latter is thus made to take heat from the cold body, which, together with the work received, it delivers into the hot body. No external work being left over, the contrivance is self-acting.

Let H_2 be the heat taken from the hot body by No. 2, and h_2 that rejected into the cold body; H_1 the heat rejected into the hot body by No. 1, and h_1 that taken from the cold body. Power being equal,

$$\text{(Reversed) } H_1 - h_1 = H_2 - h_2 \text{ (Direct) } \ldots (a)$$

$$\text{Efficiency of No. 1} = \frac{H_1 - h_1}{H_1} \qquad \text{Efficiency of No. 2} = \frac{H_2 - h_2}{H_2}$$

$$\text{But } \frac{H_2 - h_2}{H_2} \text{ is to be greater than } \frac{H_1 - h_1}{H_1}$$

And, by (a), the numerators are equal,

$\therefore$ H_2 must be less than H_1.

The heat taken from is therefore less than that given to the hot body, and by a *self-acting process* heat is being taken from the cold and delivered to the hot body, which is impossible by the

Second Law of Thermodynamics.—*Heat cannot pass from a cold to a hot body without external aid.* This is the result of experience, the tendency being always to equalisation

Digitized by Google

of temperature by heat passage *from the hot to the cold body*; so we conclude that no engine can have a higher efficiency than Carnot's.

While true that the efficiency of a reversible cycle is independent of the substance, there remain practical difficulties inseparable from the latter. Thus air being an indifferent heat conductor, large surfaces must be presented to allow the heat changes to be made rapidly, and the apparatus becomes unwieldy for high powers. Similarly the nature of the substance in the steam engine prevents its complete compression after condensation, an essential in the perfect engine, and re-heating must occur in the boiler. Steam engines have also lower efficiency than has the perfect cycle, for several reasons, included in the following list:—

Causes of Energy Loss in the Steam Engine, reducing its efficiency below that of an ideal reversible cycle.

1. Steam is not supplied at the temperature of the hot body, or furnace. This is the greatest loss.

2. Steam is not rejected at the condenser temperature and pressure, but falls regarding both when leaving the cylinder: called incomplete expansion. Further, the temperature of rejection in condenser is higher than τ_2 (cold well).

3. Steam should be compressed adiabatically from condenser temperature to *furnace* temperature. A small portion is sometimes compressed nearly to *boiler* temperature, but much the major portion has to be re-heated in boiler by extra heat supply, when condensed water is returned by feed pump.

4. If the condensed water be not returned to boiler, fresh feed water must be raised from 60° to boiler temperature instead of being originally at temperature of steam.

5. Initial condensation (*page* 614) causes waste throughout the stroke, which is only partly recompensed by re-evaporation. The expansion is not, therefore, adiabatic, as it should be.

6. Clearance (*page* 616) in cylinder being unavoidable, mus be filled with steam at every stroke, which does no work during 'full-pressure' period.

7. The boiler 'primes' more or less, that is, sends water particles along with the steam, which pass to the condenser without doing work, or, still worse, abstract heat from the cylinder steam in their attempt to vapourise.

Digitized by Google

8. The range of working temperature is small in comparison with the temperatures themselves: τ_1 being fixed to prevent burning of cylinder oils and packing, and τ_2 by the cold well temperature.

9. Heat is lost by radiation.

10. The substance is lost by leakage.

11. Wherever imperfectly-resisted expansion occurs, reversibility impaired: *e.g.*, the 'drop' into receiver in a compound engine.

12. Various small losses, shown on indicator diagram: *e.g.*, wire drawing, &c.

13. Work is lost in (*a*) the 'solid' friction of the engine parts, (*b*) the fluid friction of the passing steam.

Initial Condensation and Re-evaporation.—When hot saturated steam enters a cylinder cooled to exhaust temperature, an '*initial condensation*' occurs, which is not immediately apparent on the pressure diagrams. After cut-off, further condensation lowers the expansion curve, as shown dotted at A B, Fig. 618. But cylinder and steam becoming more equal in temperature, the latent heat, liberated during liquefaction, is permitted to raise the curve, as at B C, by causing a certain *re-evaporation*. The first loss is, however, very great, and by no means made up by the second gain, so there is always a quantity of water rejected at release, some of which evaporates during exhaust and creates a back pressure. These losses may be mitigated (1) by applying clothing in quick running engines, and thus securing approximate adiabatic expansion, (2) by adopting a steam jacket for engines of a slower type, where there is time for the heat to be taken up, or (3) by superheating the steam before admission, and partially removing the first cause. The jacket both assists re-evaporation at an earlier, and consequently more available, portion of the stroke, and prevents to some extent initial condensation: the experimental gain being stated at from 10 to 20 per cent. Liquefaction in the jacket is not so detrimental, but in the cylinder the water acts as a conductor from the steam to the metal. Live steam should always be used for the jacket, and efficient drainage applied.

Theory of Compounding.—Another way of decreasing liquefaction is to divide the work among 2, 3, or 4 cylinders; and, if great differences of temperature be employed, no other course is possible. Thus we arrive at the Compound, Triple, or Quad-

Digitized by Google

ruple expansion engine.* The advantage of compounding was long doubted, the true theory of its application being misunderstood. In Fig. 619, area A shows work done in the high-pressure, B that in the intermediate, and C that in the low-pressure cylinder, the object being to divide the work equally, while equalising the fall of temperature as nearly as possible. The actual diagrams will be discussed later, as also a further advantage of the system, resulting in more even turning moment on the crank shaft.

(*See Appendix II.*)

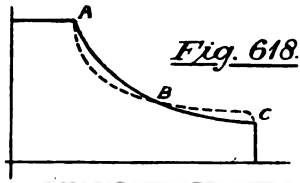

Fig. 618.

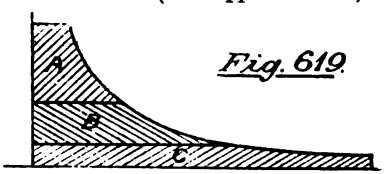

Fig. 619.

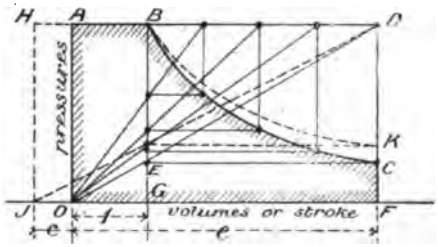

Fig. 620.

Expansion in the Cylinder.—Assuming steam to follow Boyle's law, Fig. 620 is a crude diagram of work done. The steam being admitted during, say, a quarter stroke, and the supply cut off, the rest of the stroke is completed by expansion. From A to B there would be *full* steam, and from B to C the pressure would approximately fall along the isothermal and hyperbola B C. Then area O A B G shows work done by the full steam, and G B C F the additional work during expansion.

Construction of Hyperbola.—To draw this curve: join O D, produce the crossing point E horizontally to C, which is a point in the curve. Other points being found similarly, between B and D, by projecting from the ends of radial lines, the curve is traced through the crossing points.

* More correctly, 2, 3, or 4 stage compounds.

Digitized by Google

Clearance.—Supposing a certain clearance between valve face and piston at end of stroke, to be filled before the piston moves. Representing this by O J in terms of the stroke O F, the steam now expands from J G to J F, and the hyperbola must be drawn from the new origin J, thus raising the curve to B K as dotted; and the rate of expansion will have changed from

$$\frac{O\,F}{O\,G} \text{ to } \frac{J\,F}{J\,G} \qquad \text{or from } \frac{r}{1} \text{ to } \frac{r+c}{1+c}$$

The Steam Engine Indicator is a well-known apparatus (first invented by Watt, and much improved by McNaught and Richards) for the purpose of automatically describing the pressure-stroke diagram just considered. Fig. 621 represents a 'Tabor' indicator, one of the most recent varieties of the instrument. A is a small cylinder containing a liner, in which a piston, B, slides freely. Steam being admitted under B, pencil F is raised by the connection C, D being a rocking fulcrum. F would describe an arc but for the slot E, which compensates the curvature and compels the pencil to move in a vertical straight line, its displacement indicating rise or fall of *steam pressure.* The drum G, provided with paper for the diagram, being rotated on stud L—by the cord H (attached to the moving engine) in one direction, and by the clock spring M in the other direction—represents the stroke of the engine piston. Both actions occurring at once, a diagram like Fig. 620 is obtained. Certain deviations, however, occur, which we shall afterwards discuss.

Figure N represents the indicator gear usually adopted. It is there applied to a horizontal engine, but may be modified to suit other forms. Lever S vibrates with the crosshead, and carries on its axis the 'brumbo' pulley T for decreasing the stroke of the cord to suit that of the indicator drum. The indicator is connected to each end of the cylinder by a pipe provided with stop-cocks at P and Q, and an indicator cock at R. The latter is seen in section at U and V, having a three-way passage to admit the steam (1) to the indicator and out to the air for blowing through, (2) to the indicator only, or (3) the cock may be closed. To avoid clearance in pipe P Q it is better to use two indicators, fixed at P and Q. Notice also the spring W, of which several different

Digitized by Google

The "Tabor" Steam-Engine Indicator.

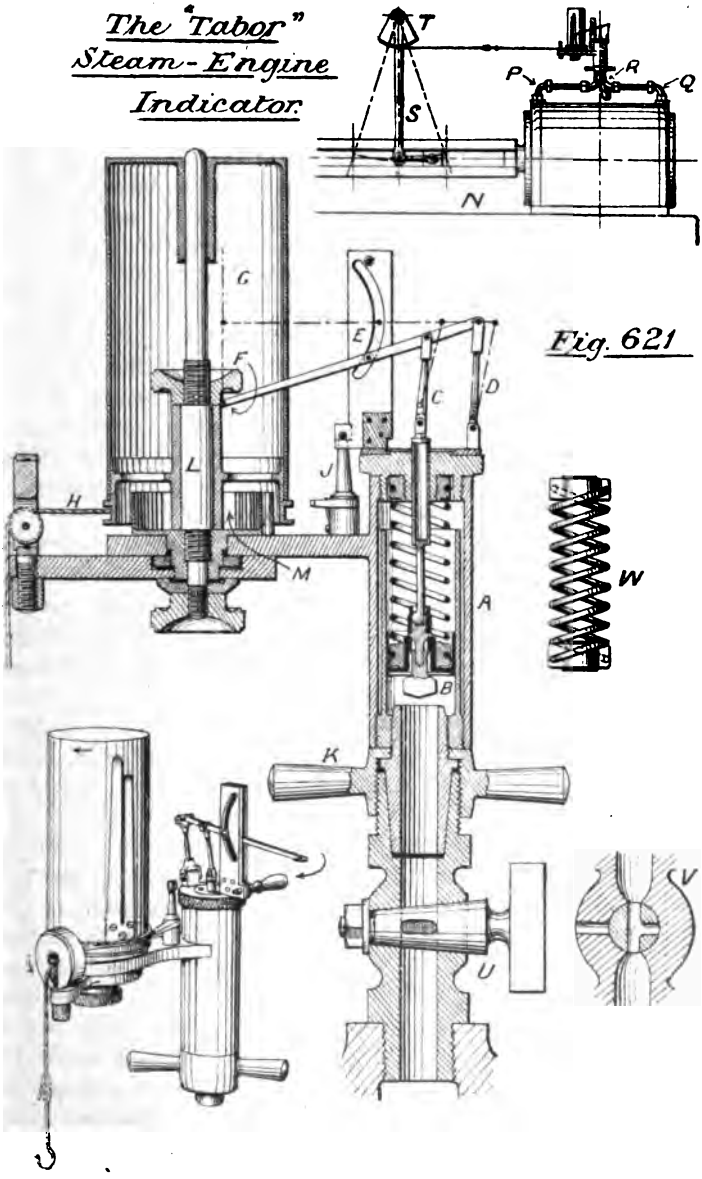

Fig. 621

Digitized by Google

strengths are provided, so as to indicate pressure to any convenient scale: two wires are coiled in the same direction, but start from opposite sides of the base.

To use the indicator, first let the engine rotate uniformly, then connect the cord. Open cock P and turn R to blow through. Open indicator to atmosphere and let pencil describe atmospheric line; then connecting indicator to steam, bring the pencil gently round and describe the diagram. In like manner also with the cock Q, after which the paper may be removed. The 'pencil' is usually brass wire, and the paper that known as 'metallic.' (*See App. II.*)

Topography of Indicator Diagram.—Taking a condensing engine, *i.e.*, one which exhausts into a vacuum, and has additional pressure due to the atmosphere on the forward side of the piston, as in Fig. 622: O A is the vacuum or zero line, and B C the atmospheric line of 15 lbs. absolute; D A is the stroke, and O D the clearance (valve passages and clearance proper) in terms of D A.

The clearance space first fills, and the pressure rises to F. Then the piston moves to G, where steam is cut off, expansion takes place between G and H, release to exhaust at H, pressure falling only to J, while the piston returns because we cannot entirely eliminate vapour pressure in the condenser (back pressure) shown by A J. Exhaust being fully open between J and K, a horizontal line is drawn up to compression point K, and the remaining steam compressed to L, where it is met by incoming fresh steam, due to the opening (lead) of the valve before commencement of stroke, and the pressure once more rises to F.

Deviations from the Normal Diagram are shown in Fig. 623. *Wire drawing at cut-off* is indicated at K, the full steam line falling on account of narrow ports or throttling by the slide valve. B shows *late admission*, the piston travelling some distance before full pressure is felt, due to want of lead on the valve, which should open *before* the end of stroke. *Late release* and *excessive clearance* are seen at L, and a *leaky piston* would cause diagram F, the pressures on each side of piston tending to equalise. A *leaky slide valve*, as at G, would raise the expansion curve at the expense of fresh steam, and *initial condensation*, H, may be detected, by drawing the hyperbola. *Too much or too*

Digitized by Google

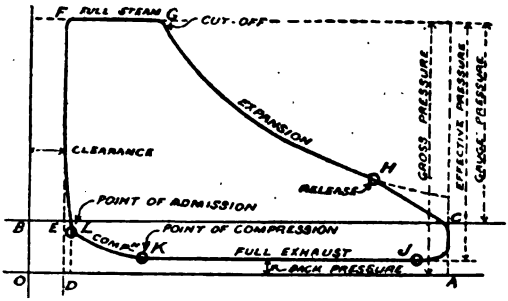

Fig. 622.

Topography of the Indicator Diagram.

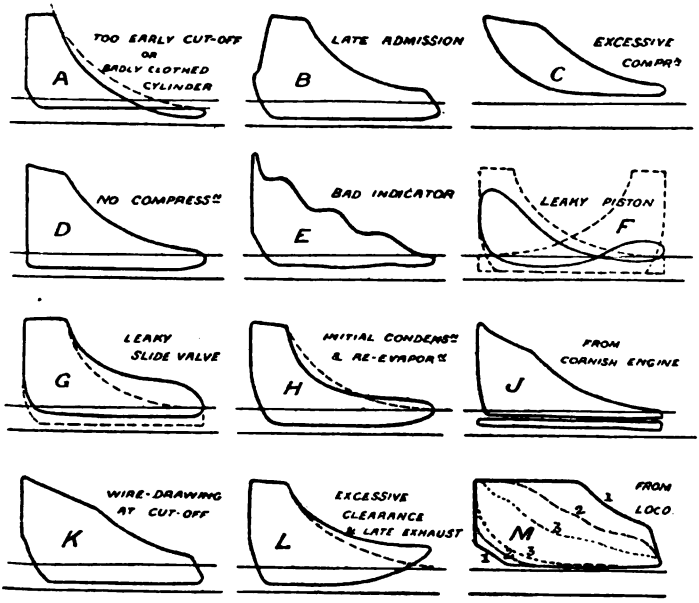

Indicator Diagram *Fig. 623.*

little compression would give diagrams C or D respectively, and a *shaky diagram*, like E, would be produced by an indicator with too light a spring or too heavy a piston. Diagram A shows

Digitized by Google

serious initial condensation. The upper and lower diagrams at J are from the top and bottom of the piston respectively in a Cornish single-acting pumping engine: and M shows the varying diagrams obtained from a locomotive, (1) when starting, next (2), and lastly (3), as the valve gear is linked up from the reversing lever.

From the Indicator diagram we may therefore deduce:

1. The points of admission, cut off, release, compression, &c.
2. Comparison of cylinder with boiler pressure.
3. The wire drawing in steam and exhaust passages.
4. The back pressure.
5. The condensation, re-evaporation, and relative dryness.†
6. The indicated horse power from the diagram area.

Calculation of Indicated Horse Power, or that shown upon the indicator diagram, and representing the work given to the piston by the steam or gas.* Three pairs of diagrams, in Fig. 624, are taken from the respective cylinders of a triple-expansion engine; and are copied from the Hons. Engineering Exam. 1887. The *mean effective pressure per square inch* (p) must first be found, so the diagrams are divided into 10 parts by equidistant vertical lines. Knowing the scale of the indicator spring, the pressure may be measured at the middle of each division, *within* the enclosed curve; these figures representing the *effective* pressures. Notice that at A and F, Fig. 623, the loop encloses *minus* effective pressure; every measurement must there be treated as minus, and only added to the other *plus* measurements algebraically. Adding the 10 measured parts, and dividing by 10 gives mean effective pressure for each diagram; the mean of the pair being then found by adding them and dividing by 2.

Multiplying (p) by piston area (a) gives *total mean pressure*, and this again by stroke in feet (L) gives work in foot pounds per stroke. Further multiplying by number of strokes per minute (N) gives work per minute, and the whole divided by 33,000, or one

* Brake horse power is found by dynamometer, as at p. 575, and mechanical efficiency of engine $= \frac{\text{B. H. P.}}{\text{I. H. P.}}$ † *See Appendices I. and II.*

Digitized by Google

horse power per minute, will represent the indicated horse power of the engine, the formula becoming

$$\text{Indicated horse power (per min.)} = \frac{p\,L\,a\,N}{33{,}000}$$

Taking the high pressure cylinder in Fig. 624, the addition of the pressures on the left diagram, 73, 103, &c. = 679·5, and the mean pressure = 67·95. The right diagram similarly has a mean pressure of 59·5, the final mean pressure becoming 67·95 + 59·5 ÷ 2 = 63·72. Area of cylinder is 10 × 10 × 22 ÷ 7 = 314·16, stroke is 3 feet, and number per minute 63 × 2 = 126. We have then:

$$\text{I. H. P. in H. P. cylinder} = \frac{63{\cdot}72 \times 3 \times 314{\cdot}16 \times 126}{33{,}000} = \underline{229{\cdot}3.}$$

In the intermediate cylinder, mean pressure on the left is 23·9 and that on the right 22, the final mean being 22·95. Area of piston = 855·3; stroke and revolutions as before.

$$\text{I. H. P. in I. P. cylinder} = \frac{22{\cdot}95 \times 3 \times 855{\cdot}3 \times 126}{33{,}000} = \underline{224{\cdot}44.}$$

Mean pressures on left and right respectively in low pressure cylinder are 9·5 and 7·65, and the mean of these is 8·57. Then,

$$\text{I. H. P. in L. P. cylinder} = \frac{8{\cdot}57 \times 3 \times 2290{\cdot}22 \times 126}{33{,}000} = \underline{224{\cdot}41.}$$

Advantages of Single, Double, and Triple Stage Expansion.—The advantage of expanding steam in a single cylinder, instead of using full pressure to the end of the stroke, was demonstrated by Watt in 1782, and can be understood from Fig. 625. EG is the stroke, and FN that portion during which full steam is used, the rest of the stroke, NG, being completed by the pressure of the expanding steam. From what we know of the work diagram, SBCU will show work performed by the 'full' steam, without condensation, UCKT that by expansion without condensation, and HSTJ that produced by the use of a condenser. Not only then do we obtain additional work by condensing, but we are also enabled with the assistance of high pressure to introduce an earlier cut off and higher rate of expansion: thus using a less weight of live steam.

Digitized by Google

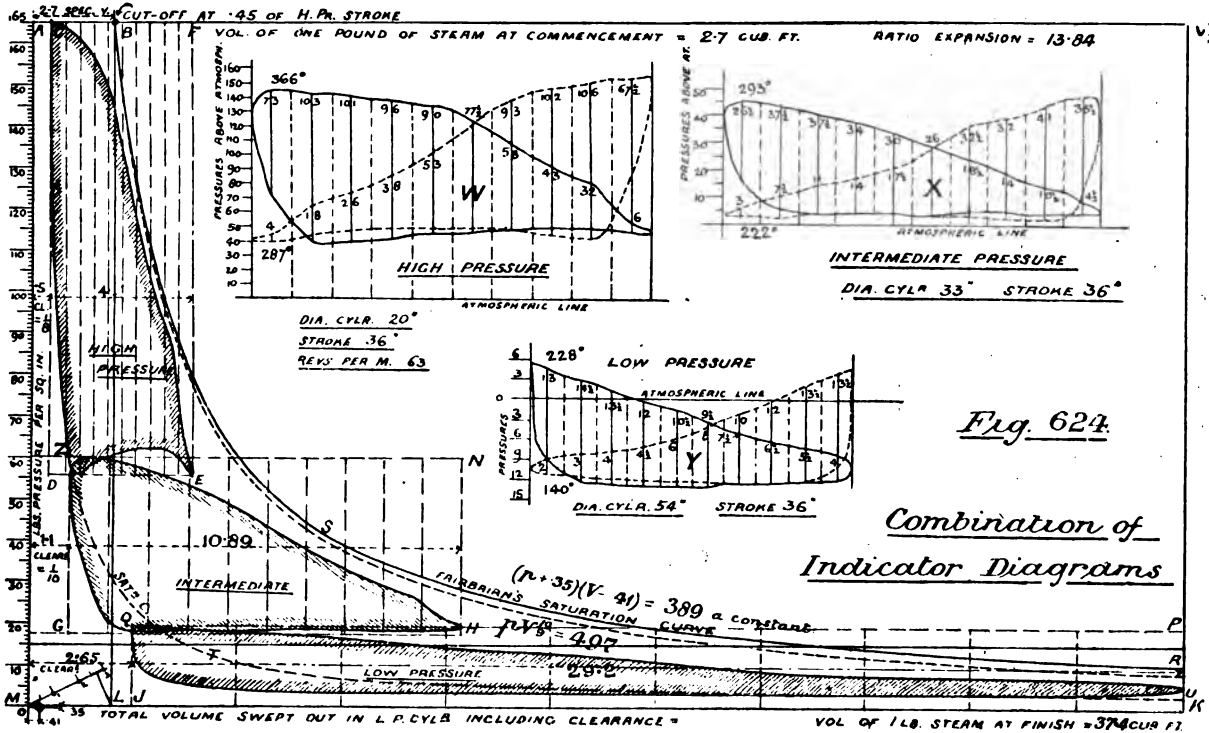

Fig. 624.

Combination of Indicator Diagrams

Digitized by Google

Though very high rates of expansion are theoretically possible in a single cylinder, the practical economical limits are soon reached, for very high ratio means very high initial pressure, and a great difference of temperature between live and exhaust steam. The former entering a relatively cold cylinder, considerable initial condensation results, which largely neutralises the advantage of increased expansion ratio. This loss is best avoided by allowing the steam to successively expand through one, two, three, or even four cylinders, thus introducing the so-called Compound, Triple, and Quadruple forms of engines. Referring now to Fig. 624, the fall of temperature in the high-pressure cylinder is from 366° to 287° or 79°, that in the intermediate cylinder 71°, and that in the low pressure cylinder 88°; a fairly equal division of the total fall, which, if the work were performed in one cylinder, would be no less than 226°. The total ratio of expansion is nearly 14 : 1, an amount impossible in one or even two cylinders, because of the serious loss from initial condensation occurring throughout the stroke; and it is in this, the diminishing of the effects of initial condensation with high grades of expansion, that the advantage of compounding is most apparent.

One other advantage of dividing the work is that two or three cranks are then employed, set mutually at angles of 90° or 120° respectively; causing a more equable turning effort, as will be more fully demonstrated later, avoiding dead-centres. Even before the practical introduction of compounding, double-cylinder engines were found necessary where frequent reversal was required, as in locomotive and marine engines. Each piston should, however, give to its crank, as nearly as possible, the same amount of work as any one of its fellows, a requirement of greater importance than equal distribution of temperature fall. Both points have been well met in Fig. 624, for the total work is divided as 229, 224, 224, while the corresponding temperature drops are 79°, 71°, and 88°.

Combination of Indicator Diagrams in Compound and Triple Engines.—Diagrams W, X, and Y, in Fig. 624, are just as received from the indicator, where for practical convenience different pound scales are employed: the lengths of the diagrams are also made to suit convenience of taking. Now

Digitized by Google

primarily the base line should be volumetric, so in representing these diagrams to the same scale, the bases must be altered to suit the volume of each cylinder respectively, and one pressure scale be used throughout; we shall then see at a glance the comparative work performed in each cylinder, and shall further be able to judge how nearly the total diagram corresponds with what should take place were the whole expansion to occur in one cylinder under theoretically good conditions.

Strokes being equal, the area, or diameter squared, will *represent* cylinder volume. The squares of the diameters are as 4 : 10·89 : 29·2. Taking clearance at $\frac{1}{8}$ cylinder volume for the H. P., $\frac{1}{10}$ for the I. P., and $\frac{1}{11}$ for the L. P., they are represented by ·5, 1·1, and 2·65. In the large diagram, set up at MA a scale of absolute pressures per sq. in., and measure volumes along OK to *any* convenient scale. Thus the dotted rectangles CE, ZH, and QU are obtained, in which the indicator diagrams are to be inserted. Divide DE, GH, and JK, each into 10 parts, and erect vertical lines, upon which pressures are to be placed, as taken from corresponding lines on the diagrams W, X, and Y, being careful to set them up to *absolute* scale; and the shaded curves are obtained.

Next mark point of cut-off B, from which to draw the saturation curve. The latter being always shown in terms of specific volume (see Fig. 608), divide AB into 2·7 parts, or the volume of one pound weight of steam at 165 lbs. absolute pressure. The method of division is shown at ML: an inclined line is drawn and 2·7 divisions to any scale placed upon it; then parallel lines to ML will divide the latter proportionately. The volume ·41 cub. ft. has thus been found, which being crossed by ·35 lbs. sq. in. minus, gives the new origin for the curve BSR, to be drawn as a hyperbola in the usual graphic manner (Fig. 620). A second curve CTU may be traced by dividing AC into 2·7 parts and proceeding as before, the origin being then much nearer O.

By stepping the cut-off ML into the whole volume MK, the number of total expansions 13·84 is found, the pound weight of steam occupying at the end of the low-pressure stroke a volume of 13·84 × 2·7 or 37·4 cub. ft. The shaded areas, then, further represent the work done by one lb. weight of steam, if the base lines be specific volumes, and the pressures taken from the

Digitized by Google

pressure scale, but multiplied by 144 to obtain pounds per sq. ft. The gaps between areas and saturation curves show work lost, but while there is a loss on the side s, there is a gain on side T. If the clearances were such as to cause the compression curves to follow T, the expansion curves would no doubt follow s more closely, but this would necessitate large clearance in the L. P. cylinder. Of course it must be understood that the saturation curves cannot be exactly followed except where good steam jackets are adopted; the curve should otherwise be nearer Rankine's adiabatic $PV^{\gamma} = C$, which falls slightly below the saturation curve.

Calculation of Work and Horse Power from Theoretical Indicator Diagram.—It is sometimes convenient to make rough preliminary calculations from a simple

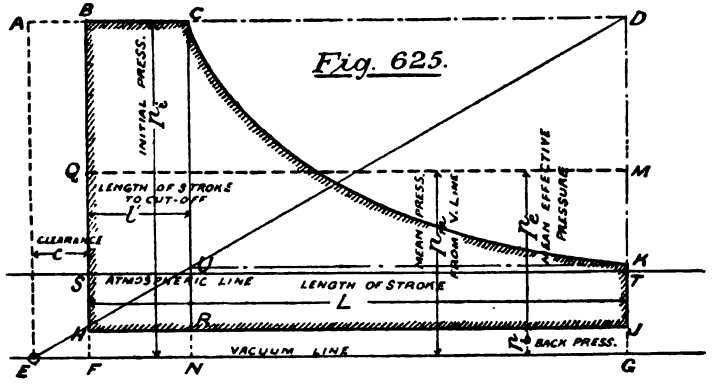

Fig. 625.

Theoretical Indicator Diagram.

hyperbolic diagram as in Fig. 625, where various losses at the corners, caused by release, wire-drawing, cut off, &c., are neglected. Then

$$\text{Area of BN} = p_i\, l'$$

$$\text{Area of CKNG} = p_i\, V \log_e r = p_i\,(l'+c)\left(\log_e \frac{L+c}{l'+c}\right)$$

$$\text{Mean effective pressure } p_e = \{(\text{areas BN} + \text{CKNG}) \div L\} - p_b$$

$$= \frac{p_i}{L}\left\{l' + (l'+c)\left(\log_e \frac{L+c}{l'+c}\right)\right\} - p_b$$

Then,

$$\text{Horse Power} = \frac{p_e L a N}{33{,}000}$$

(*See Appendices I. and III.*)

Digitized by Google

Note that N = *strokes* per min., and logarithms are hyperbolic.

HYPERBOLIC OR NAPIERAN LOGARITHMS.

No.	Log.	No.	Log.	No.	Log.	No.	Log.
1	0	3·5	1·252	6	1·791	8·5	2·140
1·25	·223	3·75	1·321	6·25	1·832	8·75	2·169
1·5	·405	4	1·386	6·5	1·871	9	2·197
1·75	·559	4·25	1·446	6·75	1·909	9·25	2·224
2	·693	4·5	1·504	7	1·945	9·5	2·251
2·25	·810	4·75	1·558	7·25	1·981	9·75	2·277
2·5	·916	5	1·609	7·5	2·014	10	2·302
2·75	1·011	5·25	1·658	7·75	2·047	12	2·484
3	1·098	5·5	1·704	8	2·079	15	2·708
3·25	1·178	5·75	1·749	8·25	2·110	18	2·890

Diameter of Cylinder for given Ind. Horse Power may be deduced from the formula already given for the latter. Thus:

$$\frac{p\,\mathrm{L}\frac{\pi d^2}{4}\,\mathrm{N}}{33{,}000} = \text{I. H. P.}$$

$$\therefore\ d = \sqrt{\frac{\text{H. P.} \times 33{,}000}{p\frac{\pi}{4}\,\mathrm{LN}}} = 205\sqrt{\frac{\text{H. P.}}{p\,\mathrm{LN}}}$$

Horse Power in terms of Steam used.—Piston area being measured in square feet, $(l' + c)\,\mathrm{A}$ = volume of steam up to cut-off, and $(l' + c)\,\mathrm{AN}$ = cubic ft. of steam used per minute. But if area be in square feet, steam pressure must be measured per square foot in the horse-power formula: also

$$\frac{\mathrm{L} + c}{l' + c} = r \qquad \text{and } \mathrm{L} = r\,(l' + c) - c$$

$$\therefore \text{I. H. P.} = \frac{\mathrm{PLAN}}{33{,}000} = \frac{144\,p\,\{r(l' + c) - c\}\,\mathrm{AN}}{33{,}000}$$

$$= \frac{144\,p\,\{r\,(l' + c)\,\mathrm{AN} - c\,\mathrm{AN}\}}{33{,}000}$$

$$= \frac{144\,p\,(r \times \text{steam per m.} - c\,\mathrm{AN})}{33{,}000}$$

Digitized by Google

Such a method of reckoning horse power is convenient when deciding boiler capacity and heating surface. Then :

$$\left.\begin{matrix}\text{Steam per minute} \\ \text{in cubic ft.}\end{matrix}\right\} = \frac{\text{(I. H. P.) } 33{,}000 + 144\,pcAN}{144\,pr} \Bigg\} D_f L_q$$

$$\left.\begin{matrix}\text{Steam per minute} \\ \text{in lbs.}\end{matrix}\right\} = 229{\cdot}16\,\frac{\text{I. H. P.}}{prV} + \frac{cAN}{rV} \Bigg\} D_f L_q$$

where V is specific volume at the higher temperature, D_f the diagram factor (p. 772), and L_q the liquefaction factor (*See Appendix II.*). If steam per brake horse power be desired the value B. H. P. $\div \eta$ may be inserted instead of I. H. P., where η is the mechanical efficiency. Willans' important law connecting steam consumption and H. P. is given in Appendix II.

In the above formulæ p is mean effective pressure per square in. At p. 625, this quantity is estimated in terms of initial pressure. If then it be required to know the volume of steam used, in terms of the initial pressure, it is only necessary to substitute the value at p. 625 for p.

General idea of the various forms of Steam Engine. —The steam engine is a prime mover designed for converting heat into work by allowing steam to expand behind a working piston. Sometimes the work need only be of a reciprocating nature; while in other cases, and this by far the greater number, rotative motion is required, and the crank and connecting rod, or some similar appliance is then employed, as fully set out at pp. 486 to 496. Sometimes also a rotative shaft is introduced, with a fly-wheel to assist in maintaining regular reciprocating motion, where that only is needed, or perhaps to work the valves.

The *Beam Engine*, though almost obsolete, has served and is serving much useful purpose, and a few of its applications will therefore be described. In Fig. 626, A is a Cornish pumping-engine, *a* being the cylinder, *e* the working beam, and *f* the pump-rod passing down the pit-shaft. Steam is that known as 'low pressure,' having only a few pounds' pressure above the atmosphere; and there are three drop valves, *b*, *c*, *d*, for its distribution, called respectively the steam, equilibrium, and exhaust valves. The last passes the steam into the condenser *g*,

Digitized by Google

where a vacuum is formed and maintained by the action of the air pump *h*. Fig. 608 shows that water under low pressure (as in a condenser) will boil and form vapour at a low temperature; and the air pump has to remove this vapour as far as possible, as well as the condensation water. Even then there is always a back pressure of 3 or 4 lbs. per sq. in. When the piston descends, valves *b* and *d* are open and *c* closed, there then being boiler steam at top and a vacuum below; during the upstroke, *b* and *d* are closed and *c* is open, which places the piston in equilibrium, when the pump rods raise it by their weight. The parallel motion (Watt's) is explained at p. 499; but in A, Fig. 626, one radius link is formed by the portion *e k* of the beam, and a parallelogram then connected to the middle link *k b*, so that the valve and piston rods move on parallel lines.

A rotative beam engine is shown at B. It differs from A in having the crank and connecting rod instead of pump rod, and four drop valves instead of three, the reason being that each end of the cylinder must now be connectable with boiler or condenser at will, and must therefore have a steam and exhaust valve. The method of distribution is given in Fig. 629, where the left pipe admits live steam to either end of cylinder, and the right pipe similarly removes the exhaust steam, whenever the proper valves are lifted.

A direct-acting pumping engine like that at C may have a beam solely for actuating the valves and air pump, though it also serves to guide the piston-rod. The straight line motion is Scott-Russell's (see p. 486), sometimes called 'grasshopper' gear. A beam blowing engine is shown at D, *a* being the steam cylinder and *b* the blowing cylinder, the latter having inlet valves *d d*, and outlet valves *e e*, for both ends, so that the issuing air may pass continuously to the blast furnace or other place of use. The fly-wheel is introduced to steady the motion.

E is a compound beam engine. The high-pressure cylinder *a* is placed nearest the beam trunnion, and the low-pressure cylinder further outward. The valves are not shown, but are so arranged that, when the steam has done its work in the H.P. cylinder, it is allowed to expand into the L.P. cylinder before passing to the condenser.

Digitized by Google

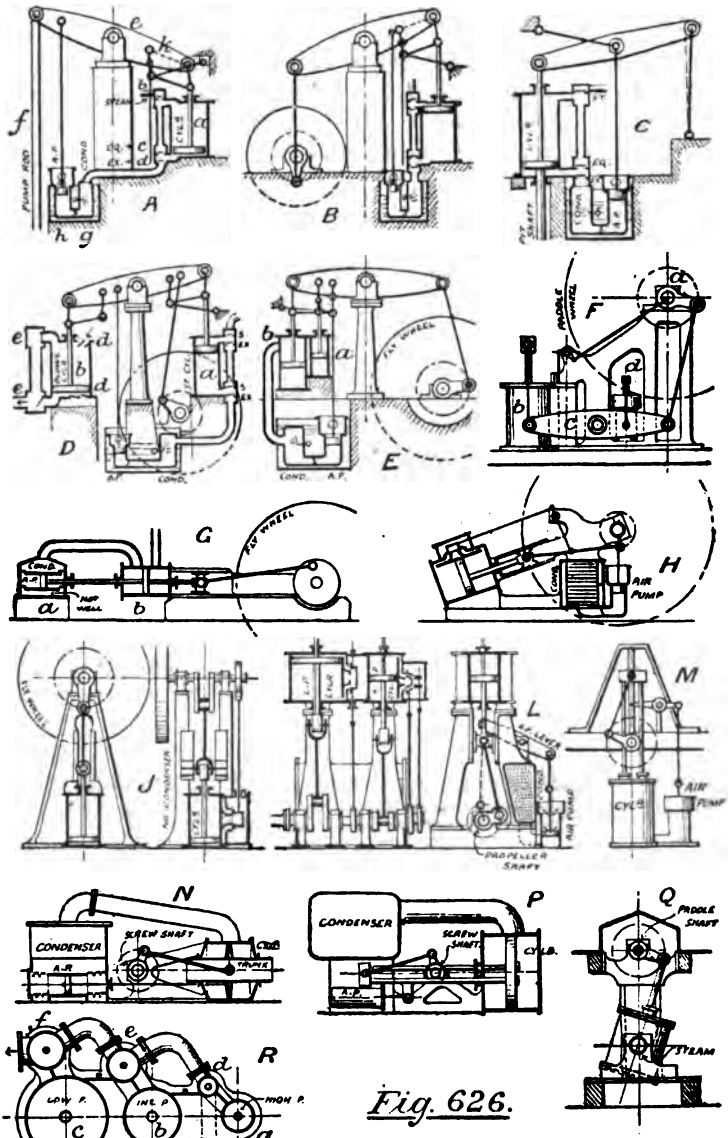

Fig. 626.

Outlines of various Engines. (SLOW AND MEDIUM SPEED)

Digitized by Google

The side lever marine engine F, the first form considerably adopted on steamboats, was but a beam engine doubled upon itself so as to save room. *a* is the paddle-shaft, *b* the steam cylinder, *c* the beam or 'side lever,' and *d* the air pump.

The *Direct-acting Engine* is shown in various forms in diagrams G to R, Fig. 626. G is a horizontal factory engine, with condenser *a* behind a cylinder *b*, so that the air pump may be worked in a simple manner by projecting the piston-rod backward. By dispensing with the beam very considerable friction at the trunnion bearing is avoided, caused as such friction was by both load and resistance, or double the piston load. In the horizontal engine there is, however, some additional frictional loss, due to weight of parts and thrust of connecting-rod, while in the vertical engine, although the former is eliminated, the latter still remains.

The diagonal paddle engine at H, like other marine engines, is designed to save room. Whenever paddle propulsion is employed, these engines are now chosen for the purpose. The condenser and air pump are placed within the 'triangle.' J is a form of factory engine seldom employed, but given as an example of a vertical engine with cylinder at bottom and crank overhead the slide valve replaces the four drop valves of Fig. 629, being worked by eccentric from the crank shaft.

Two other paddle engines are shown at Q and M. Q is the oscillating engine, exceedingly simple so far as the main mechanism is concerned, dispensing with a connecting rod; but the valve gear is more complicated than with fixed cylinders. The steeple engine (M) was introduced to save head room in shallow boats. Two piston rods are employed, and the paddle shaft is placed between crosshead and cylinder; the connecting rod is said to be 'returned.' The principal objections to this design are the difficulty of staying the slide bars, and of keeping two parallel glands steam tight.

The Penn trunk engine (N) and Maudslay return-connecting rod engine (P) are examples of early screw engines. Being both placed athwart the ship, they must be shortened in length as much as possible. Penn got rid of piston rod length by using a trunk piston and driving the air pump by a rod connected directly

Digitized by Google

to the latter. The practical objections were the difficulty of packing the necessarily large glands, and of getting at the trunk pin; but a more serious objection was the increased cooling surface. Maudslay's engine was essentially the steeple engine laid horizontally, the air pump being worked from a projection on one of the piston rods. The packing of the parallel glands was the only difficulty.

The modern marine engine is always either compound, triple, or quadruple in design, the two-cylinder compound being shown at L, which also serves to explain the triple or quadruple. The type is known as the 'vertical inverted,' or 'steam hammer,' and is merely a direct-acting vertical engine with cylinder above and crank below, to give sufficient propeller immersion with direct driving. The slide valves are driven by eccentrics as at J, and the air pump by a rocking lever. The surface condenser is cast with the standards, on one side, and the exhaust steam sometimes passes through one of the standards; but the method is not advised by some engineers, because of irregular alignment caused by expansion. When the triple engine is adopted, the valves are either placed between the cylinders, or as at R, on one side. In the latter case the valve gear must be somewhat altered. *a*, *b*, and *c* are the cylinders seen in plan, and *d*, *e*, *f* the respective valves: in this example of piston form. The passage of the steam will be understood from the sketch, entering first through *d* to *a*, then through *e* to *b*, through *f* to *c*, and finally out to the condenser.

High-speed Engines are a class of engine, usually of small proportions, making 500 revolutions per minute or more. A few principal examples are given at Fig. 627. A and B are types of the *rotary* engine, much in favour with inventors some twenty or thirty years ago, but now practically discarded. A may be called the 'annular' and B the 'eccentric' type, a sliding 'abutment' *a* being required in each case to receive the reactionary pressure. There were difficulties in these engines regarding packing and expansive working. Willans' side-by-side three-cylinder engine C, and Brotherhood's three-cylinder engine D, dispense with valve gear. At C the piston rods *a*, *b*, *c*, act as valves, each admitting or cutting off steam to the next high-

Digitized by Google

pressure cylinder in order. The high-pressure pistons further act as valves for similarly distributing steam to the low-pressure cylinders. Engine D has a special valve of annular form, through which the steam passes both to and from the cylinders, as shown by arrows. C and D are single-acting engines, so far as each

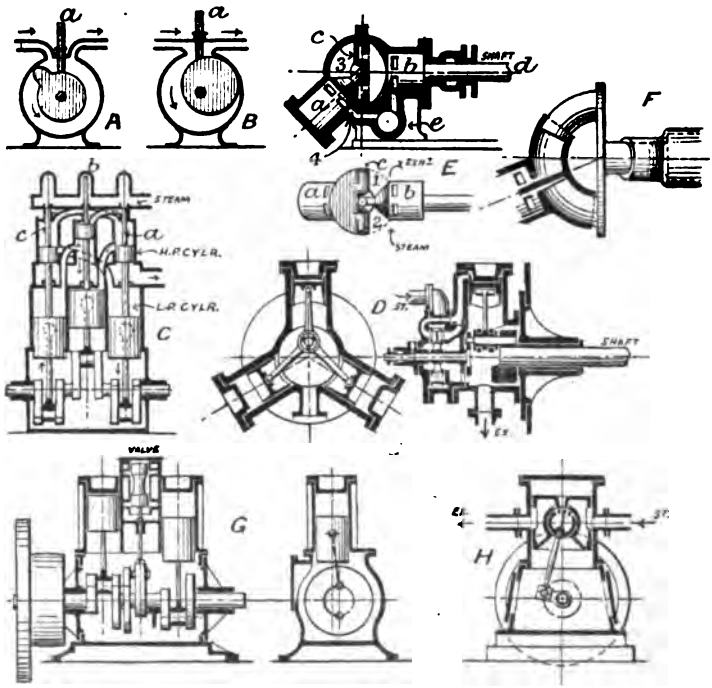

Sections of various Engines (HIGH SPEED) *Fig. 627.*

cylinder is concerned, the steam pressure being felt only on one side of the piston; but, taking the three cylinders together, there is an impulse every third of a revolution, instead of every half revolution, as in ordinary single-cylinder double-acting engines. In both engines it is only necessary to turn on steam to start in any position, while if reversal is required, an extra four-way plug-cock, called a reversing valve, is interposed, whose duty is to

Digitized by Google

change the order of the passages, making the steam the exhaust passages and *vice versâ*.

The Tower spherical engine, E, and the Fielding engine, F, are kinematically based on Hooke's joint (Fig. 475, A). In the former two revolving bodies, *a* and *b*, are hinged on opposite sides of a central disc or 'wobbling' piston C, the hinges being at right angles to each other. Within the hollow sphere are four divisions, 1, 2, 3, and 4, the last shown closed. As the bodies *a* and *b* rotate, and the disc *c* wobbles, the divisions will in turn open and close; and it follows, conversely, that when steam is admitted to these chambers consecutively, the said movements of the disc and bodies will be imitated, and the shaft *d* rotated. To effect this, steam is admitted on one side of the supporting web *e*, passed through proper ports to the four divisions in correct order, and exhausted on the opposite side of *e*. The Fielding engine works similarly, the practical difference being that four curved cylinders are employed, instead of quadri-spherical chambers, corresponding pistons being formed on the central disc. A larger obtuse angle between the inclined axes probably reduces the frictional loss.

The Westinghouse engine, G, is a type of many modern high-speed engines, two single-acting pistons forming the equivalent of one double-acting engine. A piston valve distributes the steam, and the alignment of piston and crank should be noticed. The down-stroke only being of importance, the cylinder centre-line splits the crank *radius* instead of the crank *circle;* the connecting-rod's angular vibration on down-stroke is therefore halved, and a much shorter rod may be employed, securing compactness. During the up-stroke the rod is at a bad angle, but that is of no consequence. The Newall engine, shown in section at H, is exceedingly interesting, through dispensing with so many working parts; in fact, greater simplicity with efficiency could scarcely be conceived. There are two sets of rings on the trunk piston, between which are slotted holes for the passage of steam. The distribution is effected by enlarging the trunk pin or connecting-rod end into a hollow valve, with a partition; and ports are so arranged that steam is admitted to, or exhausted from, the back of the trunk, at correct times, merely by the vibration of the connecting rod. (*See Appendix II.*)

Digitized by Google

Distribution of Steam in Cornish Engines.—As no rotative shaft is employed, the valves must be lifted by means of some exterior device, the apparatus usually adopted being known as the cataract (Fig. 628). G is the steam, H the equilibrium, and J the exhaust valve. L is the cataract for opening the steam and exhaust valves, and M that for the equilibrium valve, while A and K are the respective 'plug' rods, worked from the beam. Supposing A to move downwards, the roller P catches the cataract lever B, and raises the pump plunger D, drawing in a large volume of water through the suction valve E. Meantime the valve lever R is held by the stop-piece N on the plug rod, and further secured by the catch lever S, holding the quadrant; so that valve G remains closed.

The plug rod now returns upward, and the weight C acting on lever B endeavours to push the water out of the pump into the tank; as it cannot pass by the suction valve, it must leave by the cock F, which admits of regulation, and thus the speed of fall of D, or rise of V, may be accurately adjusted. The lifting rod V, travelling upward, will strike and raise the catch levers S and *s*, at any appointed time, and the plug rod then being at the top of its stroke, the valve lever R is free to rise by a left-handed turn, as soon as released, the actual movement being caused by the fall of weight Q, and thus the steam valve G and exhaust valve J are lifted by the cataract L. In like manner cataract M governs the opening of the equilibrium valve J, which, it will be remembered, is to be open during an opposite phase of stroke.

Double-acting Engines with Drop Valves.—It has been already mentioned that two steam and two exhaust valves are required for these engines. Fig. 629 is a vertical and Fig. 630 a horizontal arrangement, the pipes being connected to a 'nozzle box' at each end of the cylinder, in each of which a steam and exhaust valve may be lifted at the required time by automatic valve gear. An eccentric usually actuates the exhaust valve, but the steam valve is worked by cam or some form of trip gear. The former arrangement is shown in Fig. 631, the shape of cam being such as to open the valve through a small portion and close it during a large portion of the stroke. Sliding the cam on its shaft (in plan) will vary the cut-off.

Digitized by Google

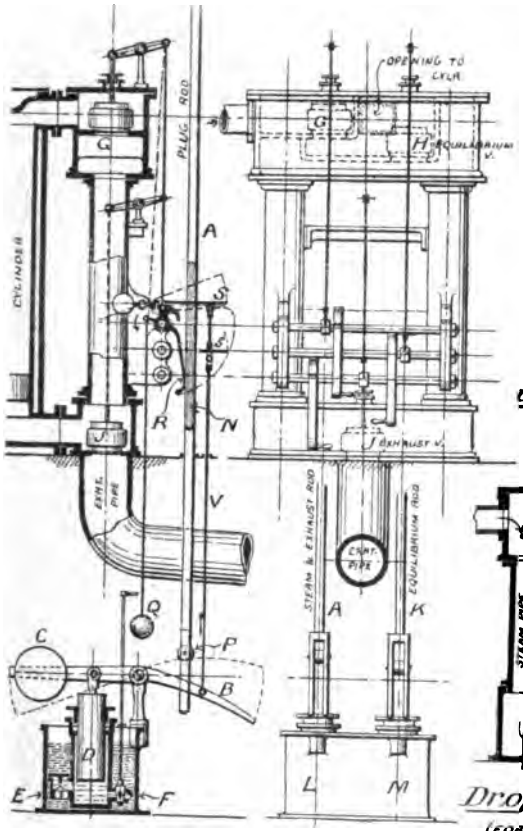

Cataract Valve Gear. Fig. 628.

(FOR SINGLE-ACTING ENGINE)

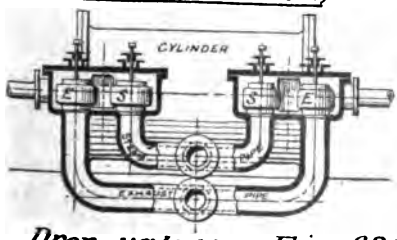

Drop valves Fig. 630.

(FOR HORIZ^L DOUBLE-ACTING ENGINE)

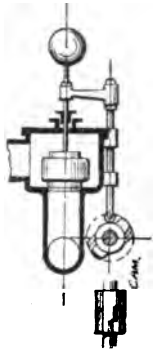

Drop Valve worked by cam Fig. 631.

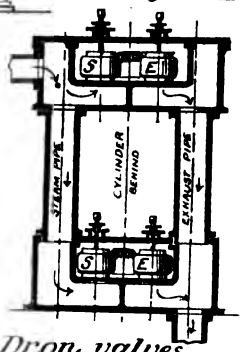

Drop valves (FOR VERT^L DOUBLE-ACTING ENGINE) Fig. 629

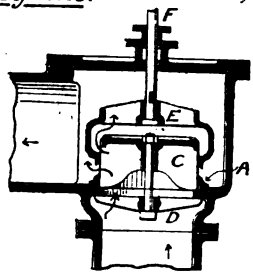

Cornish Valve. Fig. 632.

Digitized by Google

The form of drop valve, known as the Cornish double-beat valve, is given in Fig. 632, and is there shown raised, so as to clearly distinguish the valve from the seats. The steam is taken as entering from below, and while the lower seat is a ring A, the upper one consists of a plate B supported from A by the wings C, and bolted to the bridge piece D. As B exactly covers the opening, though at a higher level, the valve when closed is entirely shielded from the steam pressure below, so far as that pressure tends to lift or depress the valve, and the latter is therefore only the recipient of horizontal pressure. Consequently the valve is wholly 'balanced,' that is, the rod E has merely to lift the dead weight. On account of distortion caused by unequal expansion, the valve should be finally ground on its seat while hot.

Distribution of Steam by Slide Valve.—Murdoch (Watt's manager) substituted a single slide valve for the four drop valves in the double-acting engine, the early form being the 'long D,' so-called because it took the shape of a pipe of D section, the flat towards the cylinder. This was soon altered to the 'short D' valve so well known nowadays, and illustrated in Fig. 633. Its position in the cylinder is shown in Fig. 634, where A is the piston sliding in the cylinder B, C the piston rod, D the crosshead, and E the connecting rod, F G the crank, M the valve spindle, and N the slide valve, P the steam chest, and Q the steam pipe, R and S the steam ports, and T the exhaust port. The valve is just opening to steam by the port R, to move the piston to the right, while the exhaust passes by port S, through the valve chamber and T, to the exhaust pipe. When A has completed its stroke, N will have been automatically moved to the left, thus admitting steam on the right side of the piston, and exhausting on the left side, causing the return stroke. The slot V in the valve allows the latter to adjust itself to port face after wear.

Lap of Slide Valve.—The 'normal' valve, Fig. 633, being that shown hatched only, *just* covers the steam ports when at mid-stroke. Such a valve admits full steam during a whole forward stroke, and exhausts during the whole of the return stroke. An early cut-off is obtained by the addition of lap, the black patches U and V being known as OUTSIDE OR STEAM LAP, and those at W

Digitized by Google

and x as INSIDE OR EXHAUST LAP, *forming an additional width to the valve face, in line with valve spindle, on the steam or exhaust edges of the valve respectively*, for the purpose of giving early cut-off to steam or exhaust. By adding steam lap the width of opening is decreased, which is, however, compensated by giving increased travel to the valve. Inside lap is rarely necessary, the alterations in valve position caused by introducing steam lap usually giving a sufficiently early cut-off to exhaust (compression point). Various interesting points are raised by altering the proportions of the slide valve, which will be fully investigated later.

Relation of Crank and Eccentric.—The commonest valve gear is the eccentric and rod. The eccentric is merely a convenient form of crank whose pin is so enlarged as to envelop the shaft: it follows that the eccentricity or length of *eccentric crank* must be measured from centre of eccentric sheave to centre of shaft. This amount we shall sometimes call the *throw*. While, then, the piston moves the crank, the latter in turn moves the eccentric, and so automatically, by the slide valve, adjusts the supply of steam.

(*Without lap.*) A normal valve must of necessity be at *half stroke* when the piston is at the end of its stroke—that is, when the crank is at a dead centre; for then the valve should be just opening to steam. The eccentric crank must therefore be placed at 90° to the engine crank. Further, the direction of rotation will be determined by the position, right or left of it, of the eccentric. The eccentric will always *lead the crank* or travel before it; for, if we endeavour to turn oppositely, we shall only close the steam port at the very time it should be opening, and so block the supply. Therefore, *in a normal valve, the eccentric must lead the crank by* 90°.

(*With lap.*) Let us next consider a valve having lap. Referring, again, to Fig. 634, the thin outline shows a valve with lap, placed at mid stroke. It then covers the steam port plus the lap. The crank being on dead-centre F, it follows that, in order to admit steam by port R, valve must be moved bodily to the right, and the eccentric *lead the crank by* 90° + *lap*, as at H_1. A little consideration will show that strictly similar conditions obtain with the crank on the dead-centre Z.

Digitized by Google

(*With lap and lead.*) To assist the compression steam in preventing a knock on the crank at the end of the stroke, it is advisable that the valve be slightly open when the crank reaches the dead-centre. This is called *lead*, and is *the amount of opening of steam port at the commencement of the stroke.* When a valve, then, is provided both with lap and lead, the eccentric must *lead the crank by* 90° + *lap and lead*, the lap only being apparent on the valve, while both are apparent in eccentric position.*

Reversing Gear.—Factory engines always rotate in one direction, and thus only require a fixed eccentric. Again, changing eccentric from H to J, Fig. 634, will change the direction of motion, then shown by the dotted arrow instead of by the full arrow. Fig. 635 gives a means of moving the eccentric to the opposite position, when the engine is at rest. Sheave B being firmly bolted to a fixed plate A, can, on unloosing C, be slid from *h* to *j* and rebolted, or, still further, can be made to take any intermediate position between *h* and *j*, giving a variation of travel with the same lap. Such decrease of travel means earlier cut-off, as we shall see later.

Reversing by Loose Eccentric.—But it is not always convenient to stop the engine for any considerable period, and Fig. 636 shows one of many methods by which a single eccentric may be quickly changed from one position to the other. C is the crank, having a stop D fixed symmetrically, and A the eccentric sheave, which, being loose on the shaft, is provided with a balance weight E to prevent spontaneous movement. At present the sheave has its centre at *j*, and while the *eccentric leads the crank*, the *crank drives the eccentric;* so, although *j* causes the crank to turn round left-handed, it is at the same time pushed before the crank by the stop D. But the sheave may be swung round to *j* or *h*, when starting the engine, in a manner to be described. Lifting the gab F from the valve spindle pin disconnects eccentric from slide valve K, when the latter may be moved by the hand lever H. On starting, then, the left hand lifts the handle G, while H is moved by the right hand, and thus steam may be admitted at will to either side of the piston, according to the direction in

* The student must carefully distinguish between the two applications of the term 'lead,' which need not, however, create confusion.

Digitized by Google

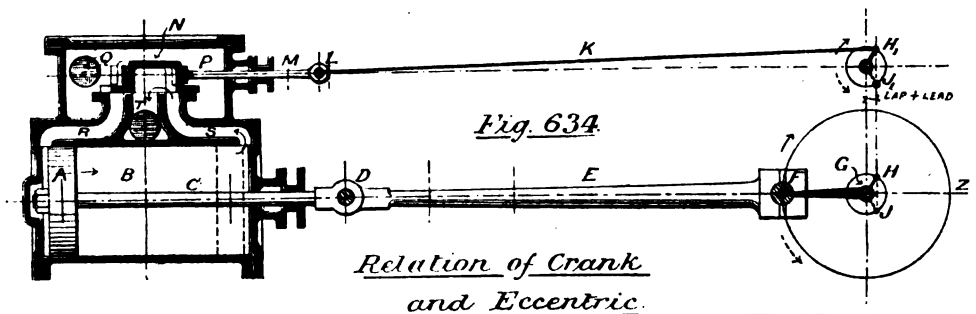

Fig. 634.

Relation of Crank and Eccentric.

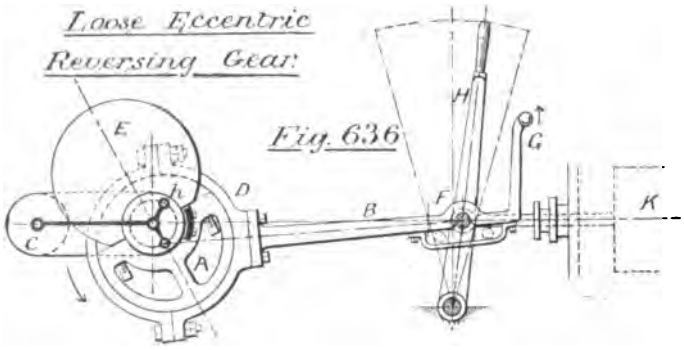

Fig. 636.

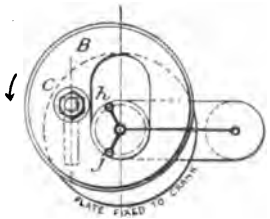

Shifting Eccentric for variable cut-off or reversal.

Fig. 635.

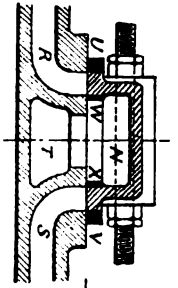

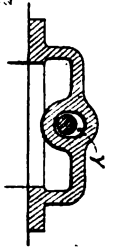

"Short D" Slide valve.

Fig. 633.

Digitized by Google

which the engine s to be turned. The slide valve K once opened, G may be dropped, crank C catches up the sheave A by the stop D, F find its way to the valve rod pin, and the gear is once more automatic. The engine may be stopped by lifting the gab.

Reversing by Link Motion.—If two *fixed* eccentrics be placed on the shafts, one for forward and one for backward movement, it can be arranged to put either eccentric in gear as required, the other remaining inactive. The gear for this purpose is known as link motion, and, though more complicated than loose-eccentric gear, is more easily manipulated, and is absolutely certain in action whatever the position of the crank. In *Stephenson's Link Motion*, Fig. 637, the eccentric rods A B are connected to either end of a link C, curved to a radius from D. The valve spindle F supports a die E capable of vertical movement relatively to link C, such movement being controlled by the lifting link G. At present the radius link is in 'mid gear,' and any 'plus' movement of one eccentric rod would be met by a 'minus' movement of the other rod. If these movements were equal, the valve would not travel at all; but, as the sheaves are not placed directly opposite on the shaft, the plus and minus displacements do not balance, and the valve opens to lead.* If the reversing rod H be moved to the right, the rocking link G will lift the radius link until rod B is nearly level with the valve spindle, and the valve then receives almost all the horizontal movement of the B, while A's motion is all but inoperative on the valve. The eccentric B is then in 'full' gear. If H be moved to the left, the A rod is put in gear and B is practically inoperative. J is termed the weigh-bar shaft, and H is coupled to a hand lever on the driver's platform.†

In *Gooch's Link Motion*, Fig. 638, the eccentric rods A and B always vibrate at the same height, and radius link C rocks from a fixed point G. But the valve rod is in two parts, one of which, K, the intermediate valve rod, being lifted or lowered, changes also the position of the die E. In the figure, K is shown in direct connection with the rod A, while B's vibration has no effect on the valve. When K is at its lowest position, rod B is in gear and A is inoperative; link C has it curves struck from D. It should also

* Larger lead than that in full gear.

† In large marine engines it is usual to reverse by steam power.

Digitized by Google

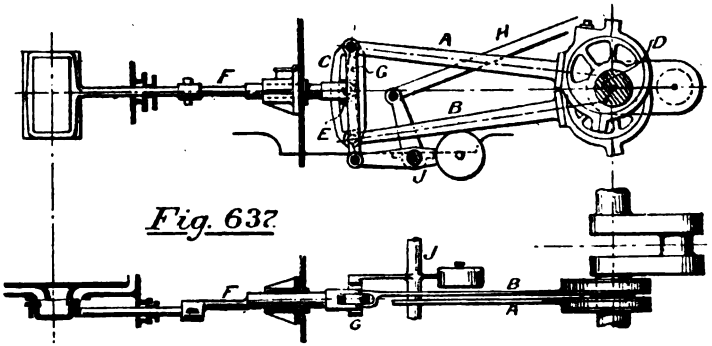

Fig. 637.

Stephenson's Link Motion.

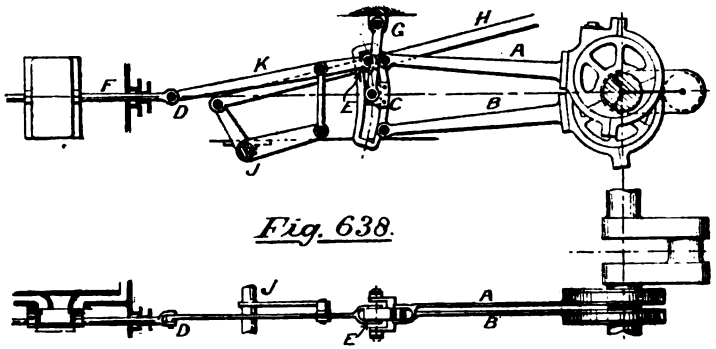

Fig. 638.

Gooch's Link Motion.

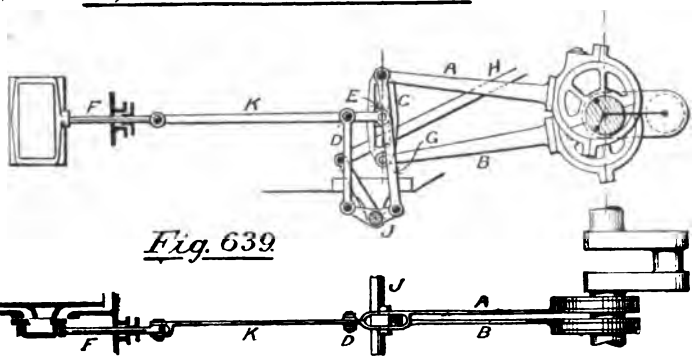

Fig. 639.

Allan's Link Motion.

Digitized by Google

be noticed that when the radius link allows the valve spindle and eccentric rod centre lines to be continuous, as in Fig. 638, valve travel and diameter of eccentric circle are equal; but if not continuous, as in Figs. 637 and 639, the eccentric circle must be larger than the valve travel. Either method may be adopted. When the link is lifted, as in Stephenson's gear, its concave side lies towards the crank, while if the valve rod be lifted, the concavity is towards the valve. Consequently, were the link to be lifted simultaneously with a lowering of the valve rod, or *vice versâ*, it would curve neither to one side or the other—that is, would be straight. This is obtained in *Allan's Link Motion*, Fig. 639, the movement being analogous to Watt's parallel motion. A double-armed lever is fixed to the weigh-shaft J, which, being turned by rod H, moves the rocking links D and G in opposite directions, so as to bring A or B opposite K, as required.

Reversing by Radial Valve Gear.—Many inventors have endeavoured to obtain a simpler reversing gear than those described, by taking motion from the connecting rod. The most successful is *Joy's Valve Gear*, Fig. 640. A point A on the connecting rod describes a horizontal ellipse, as at $A_1 a$, and a link A F, being attached to the vibrating link F K, causes point B within A F to describe the curious oval $B_1 b$. A third link B E connected to A F at B, and to the die D, being compelled to travel at its lower end in the oval $B_1 b$, moves the die D up and down the curved slot C G, point E tracing the true vertical ellipse $c g$. The proportions of the links are such that the width $h j$ of the ellipse exactly equals twice (lap + lead). Now, the curved slot C G, whose centre of curvature is J, is carried on a weigh-bar shaft having its axis coincident with the point D. So long, then, as C G is vertical, a vertical ellipse $c g$ is formed by point E, and the valve cannot open more than to lead at each end. This is the 'mid-gear' position. Should the weigh-shaft be slightly turned, and the slot therefore inclined, an inclined ellipse $k l$ or $m n$ is formed when H is moved to right or left respectively. The total valve travel would now be represented by the horizontal projection of the ellipses; thus the opening of the steam port would be $(k l - h j) \div 2$, measured horizontally, in addition to the lead. When point D crosses the weigh-shaft centre, the link takes always

Digitized by Google

the same angular position; the ellipses must therefore intersect at the same points, *h j*, whatever the angle of C G. B might have been coupled directly to A, but that an unsymmetrical motion would then have been given to point D. To avoid this error, the compensating links K F and F A are introduced.

We have still to show that the slewing of C G from right to left, or *vice versâ*, will reverse the crank motion. Let the crank be moved as shown by arrows; E will then be in position *h*, and, C G being fixed by a left-handed turn, the ellipse *k l* will be described, E moving from *h* to *k*, and opening the valve to steam at the side of piston required. If, on the contrary, ellipse *m n* had been adopted, the movement *h* to *m* would have closed the valve, or the crank could not have moved in the required direction. It can also be shown that when E is constrained to move in the path *m n*, the crank will turn oppositely to that described.

Hackworth's valve gear, Fig. 642, is another form of radial motion, inasmuch as the valve travel is derived from similar vertical ellipses to those of Joy. The fixed eccentric A is directly *opposite* the crank web B, and the other end of the rod carries a die C, sliding in a vertical guide D E. A point F will then describe ellipses such as *m n*, *k l*, Fig. 640, and the motion of the valve be as previously described. H is the reversing rod for changing the angularity of D E.

A modification of the previous arrangement known as *Marshall's* valve gear is shown in Fig. 643. Pin F is on the opposite side of fulcrum C; eccentric A is therefore coincident with the crank web B, and a much smaller sheave results. The pressure on the fulcrum C is, however, very great, and a vibrating link D C, with fulcrum at D, is substituted for the vertical slide. The usual ellipses are described by point F, and the necessary angularity is produced by change of position of the fulcrum D—moving the bracket-lever E C to K C or to J C by the reversing rod H.

Walschaert's valve gear, Fig. 641, does not describe the ellipses which are a sign of radial gear, but having some other points in common, is here introduced. The eccentric is fixed at right angles to the crank, as though the valve had no lap or lead; and if connected directly to the valve spindle, would of course only allow the crank to turn in one particular direction.

Digitized by Google

An intermediate valve rod F, may, however, be changed from D to B, or *vice versâ*, by the reversing lever E, so that F may move either in the same or the reverse direction of J. When F is at B, the eccentric must *lead* the crank, as in Fig. 634; but when F is at D, the eccentric must *follow* the crank. The intermediate rod F, again, is only connected to the valve rod G through the lever LM, the pin K forming a fulcrum upon which LM is rocked by the crosshead N. The travel, L P, thus obtained, represents twice (lap + lead), as at *h j*, Fig. 640, and takes effect at the dead centre positions. When F, therefore, is in mid gear at C, the valve opens only to lead, but when moved to D or B, the opening is *eccentric throw minus lap*, as in Fig. 634.

Valve Gear for Oscillating Engines.—The method by which a satisfactory motion of the valve is obtained will now be made clear by reference to Fig. 644. T and U are the valve boxes, of which there are two, in order to keep the cylinder balanced. Y is the cylinder and V W the trunnions, being steam and exhaust pipes respectively, supplied with stuffing boxes. M *m* and N *n* are the valve levers, rocking on fulcra R and S; and P Q the valve spindles, guided at their upper end. All the parts mentioned share in the rocking motion of the cylinder, the remainder are either fixed to the ship or take motion only from the crank. Z Z are fixed guides for sliding link L, whose slot is curved to a radius from trunnion centre. To L is again connected, by centre-pin F, the usual radius link G H, which is moved by eccentrics *c d* through rods D E. X is the trunnion bearing.

It will be seen that the rocking of the cylinder can in nowise affect the vertical movement of the valve levers; but any motion given by the eccentrics to the link L is faithfully transmitted to the valve spindles through their levers, the discs J K always lying in the link L. On account of the introduction of the rocking levers M and N, the eccentric motion will be reversed. The eccentrics are therefore set to *follow* the crank by 90° *minus lap and lead*, and the rods are said to be crossed.

Steam enters at V, and passes into the valve chests by the belts *e e*, entering through port *a*. After giving work to the pistons through either steam port *b b*, it exhausts through the mid port *c*, and passes out through the belt *f* to the exhaust

Digitized by Google

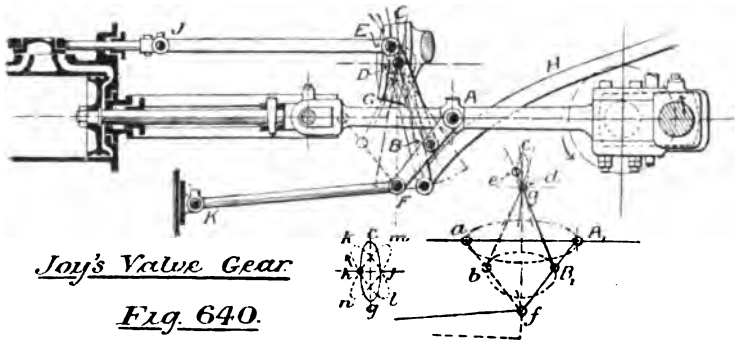

Joy's Valve Gear.

Fig. 640.

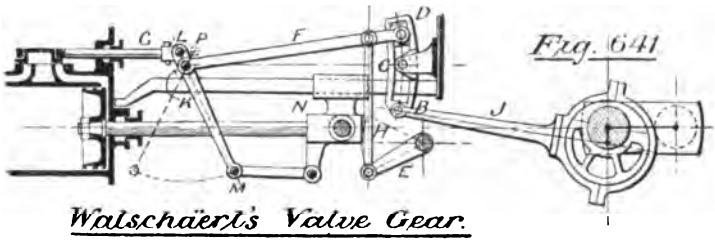

Fig. 641

Walschaërt's Valve Gear.

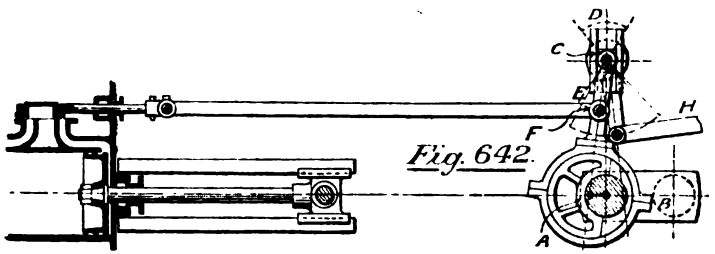

Fig. 642.

Hackworth's Valve Gear

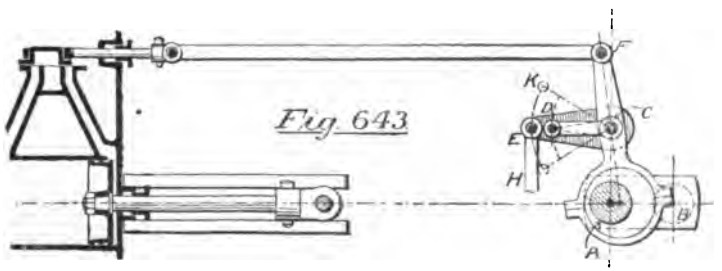

Fig 643

Marshall's Valve Gear.

Digitized by Google

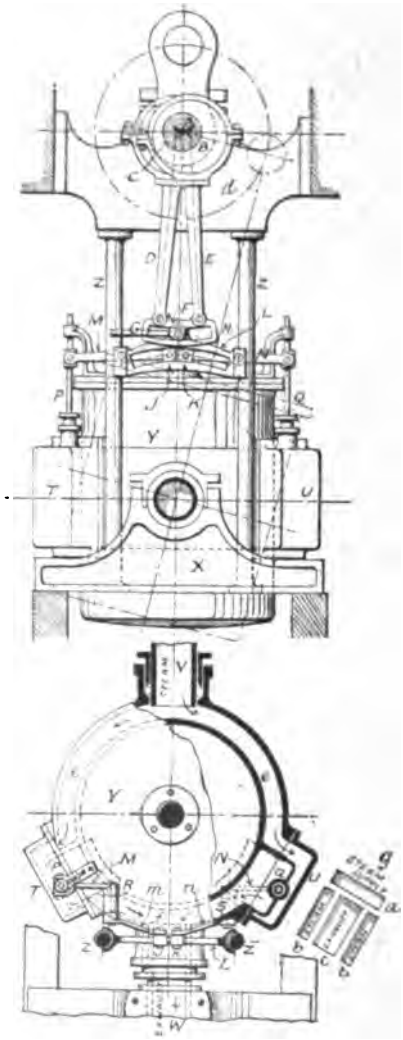

Valve Gear for Oscillating Engine.

Fig. 644.

pipe w. Sketch *g* is a front view of the ports A loose eccentric or single fixed eccentric may replace the link motion, but the link L is always required.

Digitized by Google

The Simple or 'Watt' Governor was invented by Watt for automatically regulating the supply of steam to his engines, The form adopted by him, (*a*) Fig. 645, consisted of two radius arms E E mounted on a vertical revolving spindle H, and each carrying a ball or weight P. The centrifugal force in the balls, when spindle H was rotated by the crank shaft, tended to lift the sleeve G by the lifting arms Q Q, and thus through bell crank lever F, cause the valve lever L to turn and endeavour to close the throttle valve M lying in the steam pipe N. The valve, being of elliptical form, fits the pipe when inclined at about 30° to a cross sectional plane, and is, further, 'balanced'—that is, the steam pressure on one half tends to close it, that on the other half having an opening tendency.

The function of the governor is to keep the engine speed within reasonably constant limits, whatever the load. The fly-wheel obtains approximate uniformity of crank pressure and speed during each revolution, but cannot govern the speed over several revolutions: that is left for the governor, which conversely is unable to control the sudden changes during a revolution. When the speed increases, the balls fly outward and tend to close the valve, throttling the steam supply, which reduces the crank pressure and causes a return to the normal speed. Should the velocity of the balls decrease, the exact converse will happen.

Three forces keep each ball in a raised position, and their proportionate amounts may be determined by force diagram, as at (*e*). Then $\frac{wv^2}{gR}$, T, *w*, are respectively proportional to R, L, H:

$$H : R :: w : \frac{wv^2}{gR} \qquad \text{and } H = \frac{gR^2}{v^2}$$

$$\text{But } v = 2\pi Rn = \frac{2\pi RN}{60}$$

$$\therefore h = \frac{gR^2}{v^2} \times 12 = \frac{gR^2 \times 60 \times 60 \times 12}{4\pi^2 R^2 N^2} = \frac{35{,}200}{N^2} \text{ inches.}$$

$$\text{And } N = \sqrt{\frac{35{,}200}{h}} = \frac{187{\cdot}6}{\sqrt{h}} \text{ revolutions per minute}$$

or $h \propto \frac{1}{N^2}$, and $N \propto \frac{1}{\sqrt{h}}$

Digitized by Google

The Weighted or 'Porter' Governor.—The Watt governor is not sufficiently 'sensitive,' that is, the desired action on the valve will not take place without a large increase or decrease in engine speed. Increasing the weight of the flying balls will add to the 'power' of the governor, or the capability of its performing the *work* it has to do, but as the centrifugal force varies directly as the weight, the sensitiveness is not thereby increased: the height, in short, is independent of w. Placing, however, a heavy weight on the centre spindle, as in the Porter governor (at *b*, Fig. 645), it can be shown that the required increase in revolutions for a given height of lift can be considerably diminished, and greater sensitiveness thereby obtained, without, of course, adding to the centrifugal force.

It is customary, in the weighted governor, to make the four arms equal, and the angle α approximately equal to the angle β, the rise of W_1 being consequently twice that of W. Now half W_1 pulling at each ball, by the principle of work its effect at point B will be equal to W_1.* We have, then, a total downward pull at B of $W + W_1$, the centrifugal force remaining as before. Reasoning from force diagram, as at (*e*), we have:

$$H : R :: w + w_1 : \frac{wv^2}{gR}$$

$$\therefore h = \left(\frac{w + w_1}{w}\right)\frac{gR^2 \times 12}{v^2} = \left(\frac{w + w_1}{w}\right)\frac{35{,}200}{N^2} \text{ inches.}$$

Or, for a given speed, h is greater than in the Watt governor in the proportion of $\frac{w+w_1}{w} : 1$, and for a given variation in height, the variation in speed is less than in the common governor in the proportion of $\sqrt{\frac{w}{w+w_1}} : 1$. For, from the above formula,

$$N = \sqrt{\frac{w}{w + w_1}}\ \frac{187{\cdot}6}{\sqrt{h}}$$

Assuming then, a speed variation from N to N_1, the height varying from h to h_1: the difference of revolutions in the *common governor* would be

* $\frac{1}{2} W_1 \times$ dist. 2 $= W_1 \times$ dist. 1.

Digitized by Google

$$N - N_1 = 187{\cdot}6 \left(\frac{1}{\sqrt{h}} - \frac{1}{\sqrt{h_1}} \right)$$

while in the weighted governor it would be

$$N - N_1 = \sqrt{\frac{w}{w + w_1}}\ 187{\cdot}6 \left(\frac{1}{\sqrt{h}} - \frac{1}{\sqrt{h_1}} \right)$$

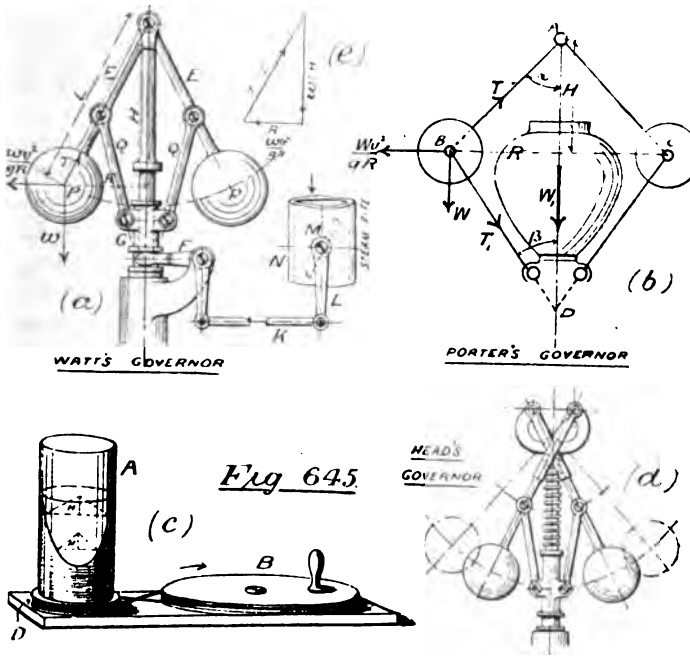

Fig 645

If the four arms are not equal, B may be supposed to rise one inch, and the rise of D noted. Then the effect of w_1 at B will be $w_1 \times$ rise of D $\div 2$, and H may be found as before.

W_1 varies in practice from 60 to 300 pounds, W from 2 to 4 pounds, and such a governor is run at high velocity to get sufficient lifting power. Fig. 261, p. 254, is a good example, where to avoid one fault of increased sensitiveness, the taking up of small changes of load, the vertical vibrations are damped by the dashpot F, containing air capable only of passing in or out at a very slow rate.

Digitized by Google

The 'Head' or 'Farcot' Governor.—Sensitiveness to change of load may be otherwise obtained. At (*c*), Fig. 645, is a vertical glass vessel A, containing a liquid, and mounted on a pulley D. A second larger pulley B, provided with a handle, is connected by a cord to D, and constitutes with it a 'whirling table.' A high speed of revolution being impressed upon A, the liquid will rise up the sides so that its surface forms a paraboloid of revolution, the height H, or *subnormal* of which is constant wherever measured. We may very well look upon these particles of water as very small governor balls, endeavouring to ride over each other in the easiest possible manner; so, allowing our flying balls to move in a similar parabolic path, we may expect them to rise with the least difficulty, and as a practical fact, such a governor, called parabolic, is extremely sensitive, so that the balls will rise or fall to the full extent with a very small alteration in speed. In some governors, the weights are rollers riding up parabolic paths; but the usual form is the crossed-arm governor (*d*), Fig. 645, where the ball paths are very nearly parabolic. A spring is placed on the spindle to resist the rise of the sleeve under small changes of load. (*See Appendix I.*)

Variable Expansion-Gear.—Whenever the engine load changes, the steam supply must change somewhat similarly, otherwise the engine will either 'race' or stop, and two means suggest themselves: (1) *throttling*, with constant expansion and altered pressure, by narrowing the steam passage at the supply valve; (2) *variable expansion*, with constant initial pressure, by regulating the movements of the slide valve so as to alter the position of cut-off. Either method may be worked by hand or governor. Judging from the indicator cards alone, and debiting throttling with a loss of energy in the process, variable expansion has always appeared more economical; but as it often causes very greatly increased cylinder condensation, while throttling dries the steam, the supposed advantages are not always great or even present. Captain Sankey's paper before the Inst. Mech. Eng. in 1895, clearly showed the above facts, which he demonstrated by reference to the Willans line. (*See Appendix II.*) Theoretically, if the pressures increase from 50 to 200 lbs. per sq. in., the gain by expansion varies from 42% to 18%: but

Digitized by Google

in practice these gains decrease to $10\frac{1}{2}$°/₀ and $5\frac{1}{2}$°/₀ respectively under the best conditions. The conclusions to be derived from the paper and the after discussion are that throttling is equally efficient for steady loads or loads that vary somewhat slowly; while variable expansion shows a decreased consumption in condensing engines, and in engines whose load changes rapidly and considerably. Further, that the gain is greater with low than with high pressures, and that expansion-gear responds more readily to sudden changes of load than does the throttle-valve governor.

Linking-up is a means of obtaining variable cut-off. It may be shown by Zeuner's valve diagram, to be explained later, that a decreased travel to a D slide valve will cause an earlier cut-off to steam, but will also compel an earlier cut-off to exhaust, or compression point, on the back stroke. Referring to Figs. 637 to 639, the mid-gear positions will produce very little motion on the valve; but, when the links are in full gear, the valve will travel its greatest. Any intermediate travel may be procured, and therefore, within limits, any desired cut-off. When, therefore, a locomotive is started, the reversing lever is pulled right over; but when full speed has been obtained, the work becoming less (being that required only to overcome frictional resistances), the driver links up to such a position as to supply just enough steam to do the work. The diagrams obtained are shown at M, Fig. 623: 1 being that at starting, 3 with full speed and least resistance, and 2, an intermediate condition. Herein lies one advantage of link motion over the loose eccentric: the former is an economic expansion gear, while variable work must be met in the latter by throttling. The radial gear, Figs. 640, 642, and 643, may also be linked up by turning the curved guides in Figs. 640 and 642, or the lever E C in Fig. 643, through a smaller angle, when the projected width of *k l* will be smaller, and the valve travel be thereby decreased. One result in this gear has already been referred to: the distance *h j* is absolutely constant, whatever the position of the curved guides; or the amount of lead never changes, whether in full, half, or mid gear. This is not so with link motion; with 'open' eccentric rods, as in Figs. 637 to 639, the lead is much greater in mid gear than in full gear, and proportionate at other places. With crossed rods (Figs. 644) the lead decreases towards

Digitized by Google

the central position (see Fig. 656). Walschaert's gear, though adjusted like link motion, has a constant lead in all positions.

It is practically impossible to obtain very early cut-off with a D slide valve without considerable wire-drawing, and in any case a large lap is required, making it possible, even in a double-cylinder engine, to have both valves so placed that the engine will not start in the right direction—a matter of some importance with locomotives. Further, it is not always advisable, especially in a factory engine, to alter compression and cut-off at the same time. A *Back-cut-off valve* or expansion valve is then applied, as in Fig. 646, for *controlling cut-off only*, all the other points on the diagram being governed by the main valve. When the two blocks constituting the expansion valve are rigidly connected, and the variable cut-off is obtained by *altered travel*, the title 'back-cut-off' is applied, as in Fig. 648*; but if right and left-hand threads are formed on the expansion valve spindle, Fig 646, and variable cut-off be obtained by turning the latter round, thus altering the lap, the arrangement is known as a *Meyer expansion valve*. In Fig. 646, A B is the main valve, being a common D valve, supplied with walls A and B to form ports C and D. The blocks E and F can be separated by turning the hand-wheel G, which has a square hole in its boss, through which the valve spindle reciprocates. Encircling the boss is a screw carrying a pointer H, whose movement represents the altered expansion to the eye. When E and F are close together, they are out of gear, and cut-off is given by main valve; but when separated, they cut off steam at the outer edges of the ports C and D. The expansion eccentric leads the crank by 180° in a reversing engine, and rather more in others: and the two valves move in opposite directions at cut-off, thus decreasing wire-drawing.

When the separate expansion valve was first introduced, a separate steam chest was provided; so that after passing through the expansion valve, the steam had to fill the main valve chest before proceeding to the cylinder, thus forming *additional* clearance steam, which would do no work except a small amount during expansion, and, being delivered into the condenser, would tend to increase back pressure. We are not surprised, then, to

* See also Fig. 263, p. 258.

Digitized by Google

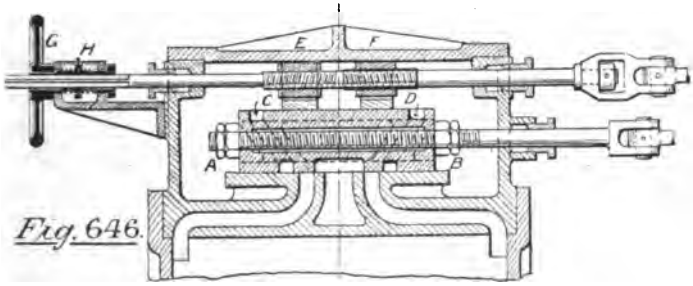

Fig. 646.

Meyer's Variable Expansion Gear.

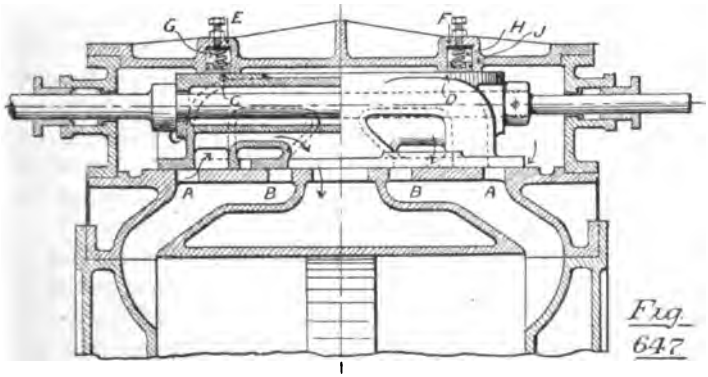

Fig. 647

Double-ported Slide valve, with relief ring.

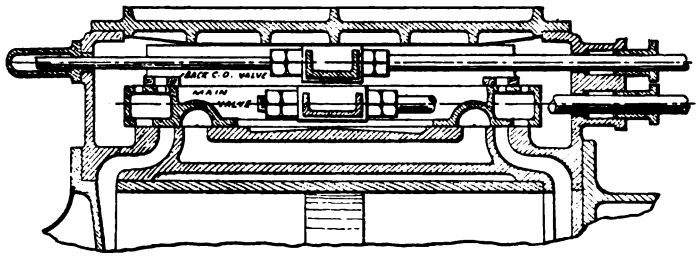

Back cut-off valve, with double ports

Fig. 648

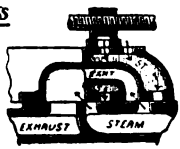

DOUBLE PORTS TO BOTH MEYER & MAIN VALVE

Fig. 649

Digitized by Google

learn that very little economy was thus secured. A 'gridiron' valve was adopted for the expansion valve, the ports being split into eight or nine portions, for reasons to be explained in the next paragraph. Clearance is decreased as much as possible in the back-cut-off valve, especially in Fig. 648, though it must always be greater than in a single valve.

A *Double-ported Valve*, as in Fig. 647, is usually adopted for low-pressure cylinders of marine engines. As frictional loss depends directly on distance travelled (total pressure being equal), it is advisable to decrease the travel as much as possible. This may be done by dividing the steam ports into two parts,* as at A B; only half travel is then required. Of course the valve must be made somewhat larger, which increases the total pressure, and consequently the force of friction; so a portion of the back is often shielded or 'relieved' from pressure by the ring C D, which lies in the annular groove E F, being kept steam tight with the back of the valve by the springs G H, and with the groove by the ring J.

At Fig. 648 is shown a back-cut-off valve with double ports, the main valve being designed to shorten the steam ports and decrease clearance. Fig. 649 shows double ports, both for Meyer and main valve, the arrows indicating the paths of live steam and exhaust.

Automatic Expansion-Gear.—Instead of connecting the governor sleeve with the throttle valve, as at (*a*) Fig. 645, it may be allowed to alter the travel of a back-cut-off valve, with increased economy and direct action. The most common arrangement is shown generally at Figs. 271 and 272, pp. 270 and 271, and in detail at Fig. 261. The expansion eccentric is coupled to the central pin of the radius link, the latter rocking on a pin at the upper end. When the governor sleeve M, Fig. 261, rises, it lifts, by lever H and link K, an intermediate valve rod. Thus the height of the governor decides the height of die in radius link, and therefore the amount of travel on the expansion valve. Eccentric travel remaining constant, when the engine speed increases and the governor sleeve lifts the die nearer the link fulcrum, the travel of the valve is decreased, cut-off is earlier, and less work done. This brings back the speed to the normal.

* Or more, as in gridiron valve.

Digitized by Google

If, on the contrary, a heavy load is put on the engine, the governor revolving at a low height gives the valve the utmost travel, securing a late cut-off.

The *Shaft governor* provides automatic cut-off by a very simple and compact arrangement, especially adaptable to small high-speed engines. The gear of the Westinghouse engine is shown at (*b*) Fig. 652, the object being to directly vary the eccentric throw. A A is a disc fixed to the crank shaft, having pins B B for carrying centrifugal weights E E, and pin H for supporting the eccentric H J. The latter may rock to the right or left on pin H by a limited amount, to be determined by the position of weights E E, their deviation causing an alteration in the eccentric throw. The weights are connected by the link C D, so that their movements shall be simultaneous, and are attached to the eccentric by link F G. If the engines then revolve at a high speed, the weights E E fly outward and pull the eccentric sheave to the left, decreasing throw and producing early cut-off; if the speed decreases, the strong springs K K bring the weights towards the centre and increase the throw.

Marine Governors have always been difficult to devise, and, although no perfect governor exists, the arrangement at (*a*) Fig. 652 is probably the best, acting as it does on a direct principle. The fluctuations in speed of a marine engine are caused by the propeller either partly or entirely leaving the water rather suddenly, thus decreasing the lead. The consequent increase of speed or racing cannot be *entirely obviated*, but may be considerably modified by the use of Dunlop's governor. C is a large pipe communicating with the water near the propeller, and D an air chamber which can be shut off from C by the screw-down valve A, worked by hand-wheel B. F is a pipe containing only air, the entrance of water being prevented by the baffle-plate E. H is a diaphragm in communication with F, and L K a rod which partakes of the movement of H, transmitting it to the piston slide valve M, for admitting to or exhausting from cylinder P. The cock L admits steam to M, and the piston rod Q R is connected to the lever R S, which has its fulcrum at W. Finally, S T is a rod for actuating a throttle valve in the high-pressure steam pipe of the engine.

Digitized by Google

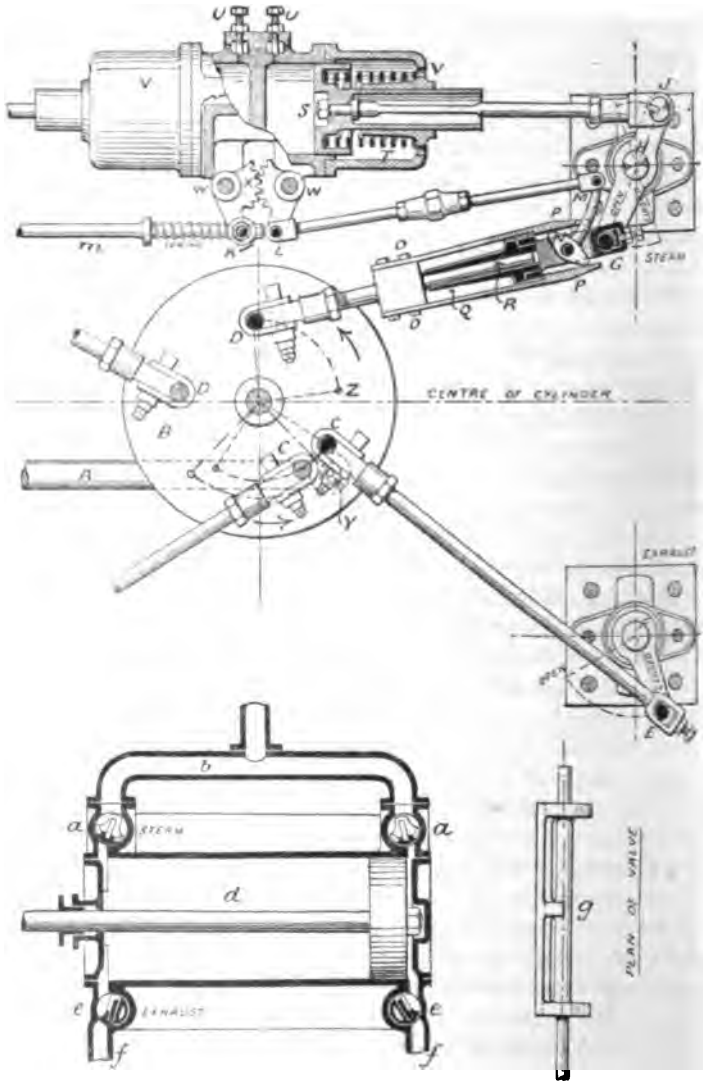

Corliss Valve Gear Fig. 650.

Digitized by Google

If the propeller sinks below the normal, water rises in D, and, compressing the air in F, presses on diaphragm H, lifting K L and moving K Z round fulcrum Z. Valve M being opened to steam at the bottom end, piston P is raised, thus depressing the rod S T and partly closing the engine throttle valve. But, as S moves down, the lever K Z is turned round K as a fulcrum, and valve M is once more placed in mid position. Suppose the propeller rises, the air in F becomes more rare, and spring J moves L K downward, opening M at the top, bringing Q R down, and raising S T, thus opening the throttle valve.

Fig 652.

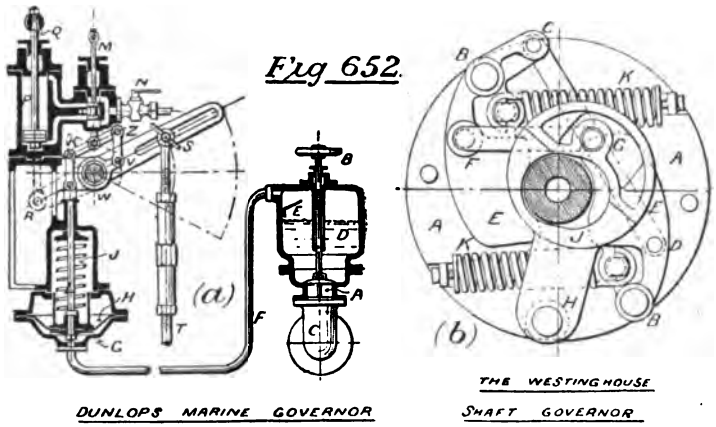

DUNLOP'S MARINE GOVERNOR — THE WESTINGHOUSE SHAFT GOVERNOR

Corliss Valve Gear.—Of all the 'trip' gears,* this is probably best known. In Fig. 650 the upper diagram shows the valve gear, the lower being a section through the cylinder and valve chambers. There are several advantages possessed by this valve arrangement and gear, some being common to other trip gears: (1) a sharp cut-off is obtained, when the 'trip' takes place, preventing wire-drawing; (2) an easier-working form of valve, *g*, is adopted; (3) steam and exhaust parts being separate, there is less loss by initial condensation; (4) clearance is very small; (5) the variable cut-off is automatic.

The valves *a a* admit steam, and *e e* pass the exhaust, being represented in plan at *g*. They are hollow cylinders having a

* Term given to rapid cut-off gears, worked by the trip of a valve lever.

Digitized by Google

large portion cut away, and are rotated by spindles to which they are connected loosely. The steam pipe is shown at *b*, and *ff* are the exhaust pipes, forming the cylinder supports. Taking the valve gear, A is the eccentric rod, which by a to-and-fro motion rotates the disc or wrist-plate B; to the latter are connected the four valve rods, two of them at C C actuating the exhaust valves, the other two at D D working the steam valves. The exhaust rod C E is directly connected to the valve lever E F, and moves it through rather less than 90°. The steam-valve rod D G is more complicated, consisting of two parts: one, D O R P, attached to the wrist plate; the other, Q N G, connected to the valve lever G J. These tend to separate, by reason of the force in the compressed spring T, but are prevented by the spring catches P P. If, however, the latter are prised apart, spring T is released, and, pulling J rapidly to the left, closes the steam valve. The prising action is obtained by the toe lever M N, which, pinned to Q N G at N, rocks on fulcrum M. As the pin D moves from Z to D, the rod D G takes a more crosswise position relatively to the toe N, and at some intermediate position the catches P P liberate the parts D and G, permitting the valve to be closed. When D moves back to Z, P P regain their normal condition and D and G are connected. The position of fulcrum M determines where, between Z and D, the toe shall release part G, and this is decided by the height of governor sleeve, the latter being connected to rod *m*. When the governors rise, *m* is pulled to the left, moving M an equal amount to the right, levers W K and W L being geared together at X. This causes the toe to separate P P at an earlier part of the stroke Z to D, and the converse will happen when the governors fall. Lastly, the dash-pot S being full of air only capable of passing out at U, reduces the shock caused by the sudden release of the spring T, the set screws serving to regulate the air passage, and the back chamber V is usually connected to the condenser to ensure decision.

The Proell Valve Gear is another good trip gear. The lever D E, rocking on fulcrum E, may for the present be looked upon as rigidly connected to the arm F F, and toes F G. At point E is attached the eccentric rod, and a movement of D to the right will cause the left-hand toe G, trailing along H J, to finally slip, when spring L closes the steam valve B. Meantime, the right-

Digitized by Google

hand toe, which tripped on the last stroke, must be replaced on J K, and this is attained by making the L-lever X F G free to turn on the pin F, until G is high enough to slip into place. The dash-pots are similar to those already described, set screws M M

Fig. 651.

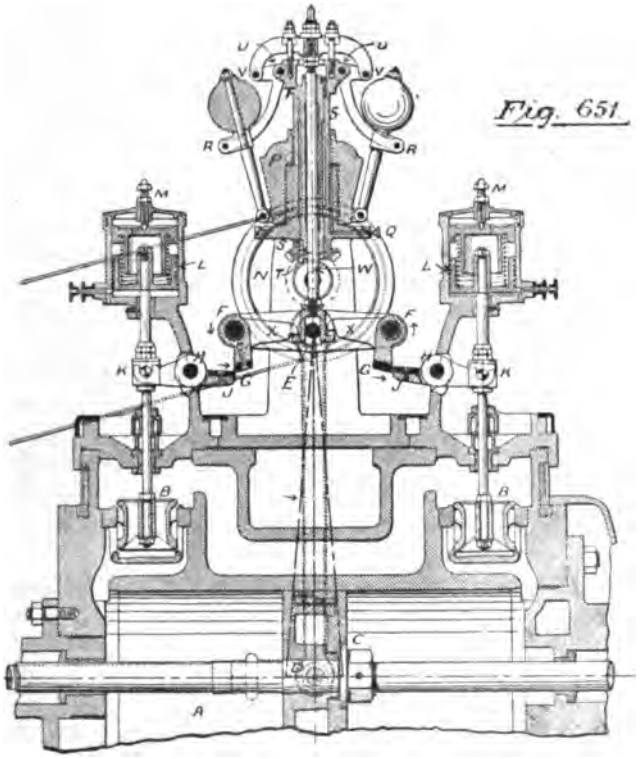

Proell's Valve Gear.

adjusting the compression of the springs L L. A rigid bracket S S supports the governor gear; within it the hollow spindle T T revolves, and the balls, flying outward, pivot R T on T, raising the central weight P, while lifting pins V V and the spindle W to a higher position. This rise affects the positions of the toes G G,

Digitized by Google

bringing them nearer together; the reverse happening when the governors fall, and thus is obtained automatically an early or late cut-off respectively. A dash-pot within P damps small vibrations on the governor, entrance or exit of air being adjusted by screw Q. The steam valves B B, being double-beat, are balanced, besides requiring only half the lift of a single valve.

Zeuner's Valve Diagram is a graphic and ready means of finding the various positions of the engine crank, where admission, cut-off, release, compression, &c., take place with a D slide valve, when the valve dimensions are known; or, conversely, of finding valve dimensions when certain crank positions are given.

Imagine a valve without lap, and let C D be the eccentric throw or radius at (1) Fig. 653. When the eccentric is at D, the valve is closed, and, when moved to H, the opening to steam *on the left* is C G. Turn G round to L; then C L is steam opening for eccentric position H. A series of points such as L may be found and the curve C L B drawn, whose radii vector show gradual opening and closing of the left-hand steam port. The left diagram being obtained similarly, join A K. Then triangles C A K, C J F are similar and equal, and A K C is a right angle; the two polar curves are circles, and while circle C B shows *steam* opening, circle C A represents the opening to *exhaust*, together being known as curves of position for a valve without lap.

Taking a valve having lap, both to steam and exhaust, its position curves are those at (2) Fig. 653. For the opening, either to steam or exhaust, will be that at (1) less the respective lap. At centre C, strike arc M N with radius = lap, while O P = exhaust lap. Then 4 B is full opening to steam at left-hand port, eccentric being at B; Q is admission position, and R that of cut-off. Similarly A S is full opening to exhaust at right-hand port, eccentric being at A; T the release, and S the compression position.

We must now translate eccentric position into crank position. Still assuming a right-handed rotation, we must turn back in a left-handed direction all the eccentric positions, through the angle by which the eccentric leads the crank, to effect the above purpose. This angle is 90° plus the angle of advance.* The change has

* Angle of advance = the angle whose sine = (lap + lead) ÷ throw.

Digitized by Google

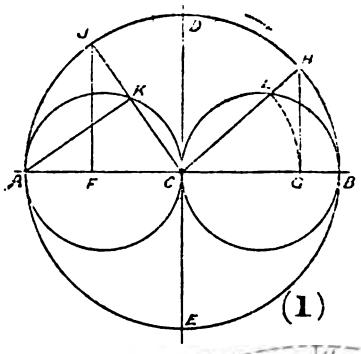

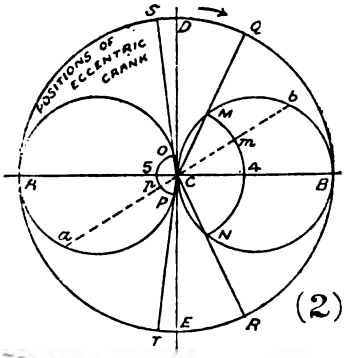

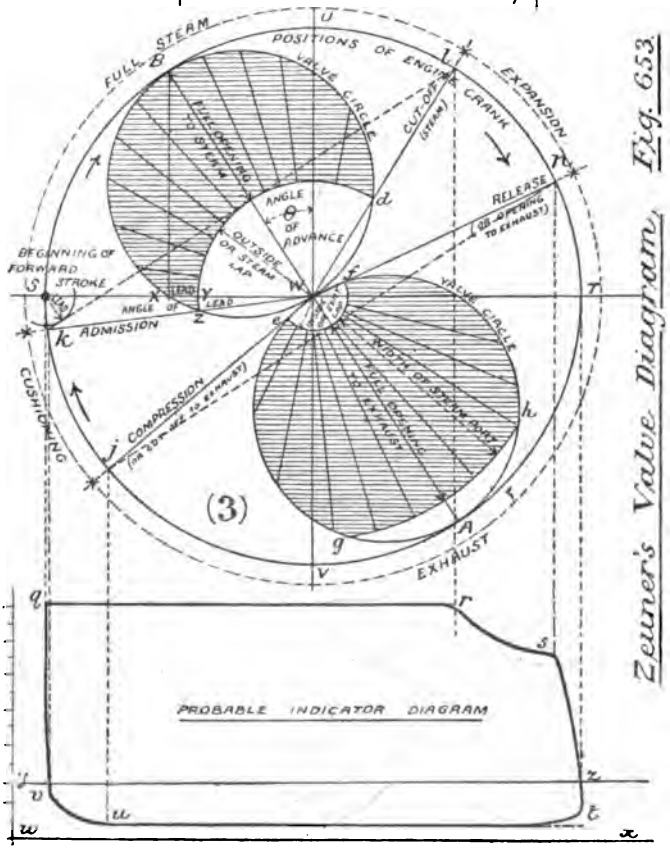

Zeuner's Valve Diagram. Fig. 653.

SHEWING CRANK POSITION FOR ALL CONDITIONS OF VALVE OPENING.

Digitized by Google

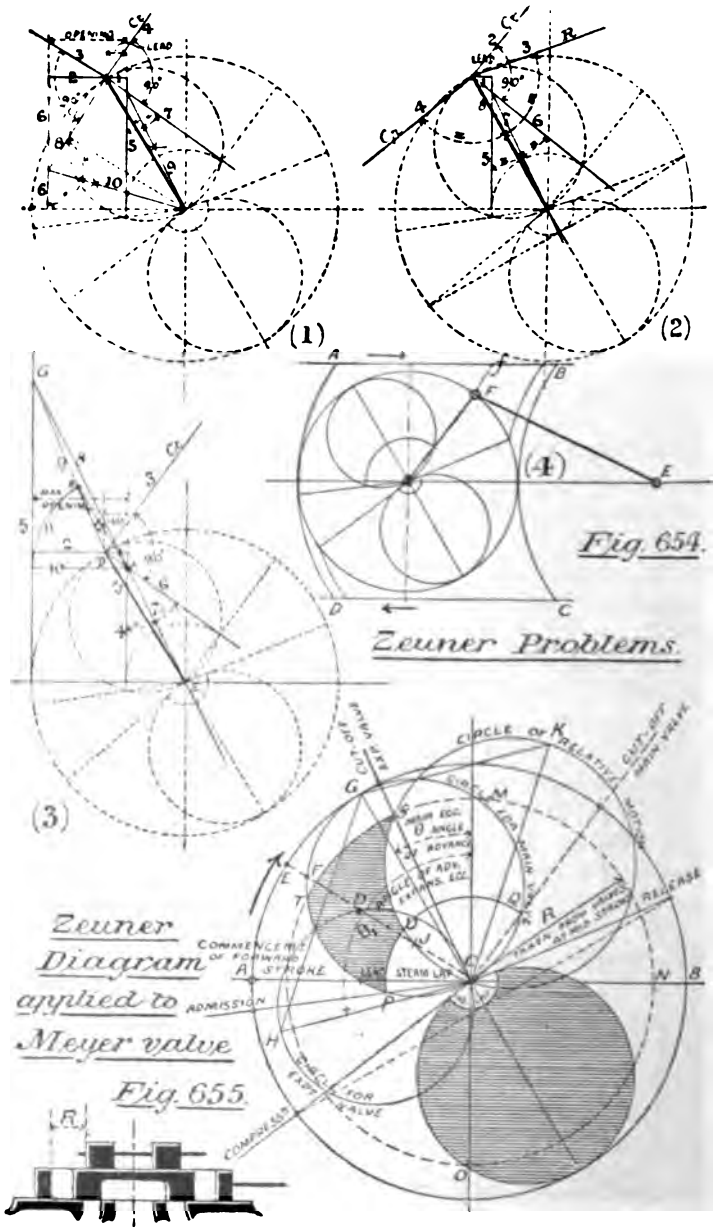

Digitized by Google

been made in diagram, (3) Fig. 653; from T to U through 90°, and from U to B through the angle of advance, W X being lap + lead, as formerly stated. The Zeuner diagram, now complete, shows positions of engine crank for various points on the indicator curve. It should be further noted that points *k*, *l*, *j*, and *n* may be found by the tangents *k l* and *j n*, and that the perpendicular distance from S to *k l* is equal to lead. Rarely, too, is it practically possible to have full opening to exhaust, as given by diagram; so the width of *steam* port must always be marked off by arc *g h*.

To find corresponding piston positions, the simplest method is to drop perpendiculars, as shown by dotted lines: and dividing stroke S T into 10 parts, figure in decimals of forward or backward stroke, as required. But as this is only approximately true for a very long connecting rod, or a slotted rod, the method in (4) Fig. 654, is more advisable. Horizontal lines A B and C D being drawn, for forward and backward stroke respectively, set compasses to E F the length of connecting rod, and strike an arc from every point, as F *f*. As radius E F must not be altered, centre E will be changed for every arc; the dead-centres will be at A, B, C, and D, and the points obtained represent the correct positions of the piston regarding these.

The Zeuner diagram further enables us to find very closely the form of indicator diagram before the engine is built. The method is shown in Fig. 653, and may be corrected further by (4) Fig. 654, due regard being also paid to the various losses.

Zeuner Problems.—A few problems will now be discussed, where, certain data being given, it is required to draw the whole diagram as in Fig. 653:

(1) Given valve travel, both laps, and angle of advance. This is too simple to need explanation.

(2) Given greatest opening to steam or exhaust, both laps, lead, and position of cut-off. Strike travel circle with radius = lap + opening, and arc of lead at S; find *l*, and join *k l*. Bisect angle *k* W *l*, and complete.

(3) Given angle of lead, travel, and positions of cut-off and release. B A is found as in last case; then, *n* being known, *n j* may be drawn at right angles to B A and the rest is clear.

Digitized by Google

(4) Given travel, or opening to steam or exhaust; also both laps, and lead. Strike travel circle and mark points W, Y, and X; diameter BW being known, the steam circle is struck and BA found; and the rest easily completed.

(5) Given steam opening for any particular position of crank, position of crank at cut-off, amount of lead, and exhaust lap. This is answered at (1) Fig. 654. Draw opening 1, 2: lead 1: position of crank for that opening, 3: and position of crank at cut-off, 4. Drop perpendiculars 5 and 6. Draw 7 at 90° to 4, and 8 at 90° to 3. Bisect angle 5, 7, by line 9; and angle 8, 6, by line 10. Their meeting point is the centre of the diagram, the dark line showing the primary circle.

(6) Given the lead, and the positions of crank at cut-off, release, and compression. See Fig. 654, diagram (2). Let 1 be the lead, while 2, 3, 4 are the positions of crank at cut-off, release and compression respectively. Drop perpendicular 5 and draw 6 at 90° to 2. Bisect 5, 6, by 7, and 4, 3, by 8; their meeting point being the centre of the diagram.

(7) Given lead, maximum opening of steam port, and position of crank at cut-off; also inside lap. For solution see (3) Fig. 654. Let 1 be the lead, 1 2 the greatest steam opening, and 3 the angle of crank at cut-off. Drop the perpendicular 4, and erect 5. Draw 6 at right angles to 3, cutting 4 in A. Bisect 4, 6, by 7, and produce at 8 to G: join 9. Draw 10 horizontally, and with centre A strike 11; join AB by 12. Draw 13 parallel to 12, cutting 7 in E, which is the centre of the diagram.

Zeuner Diagram for Meyer Valve.—Concerning cut-off point only, the real opening to steam will be due to the relation between main and expansion valves at any moment. In Fig. 655, let AB be the stroke of the main valve, CG its steam circle, and θ the angle of advance. Also let θ_1 be the angle of advance of the expansion eccentric (nearly opposite the engine crank), and CH its throw. Taking position E, CF would be the movement of main valve from central position, and CD that of the expansion valve, the difference or relative motion being DF. Measuring this difference at CJ for several positions such as E, CJK is found, which may be proved to be a circle. To find CK directly, join HG and complete the parallelogram HK by parallels

Digitized by Google

G K, C K. Then, with certain limitations, the radii vector of C K will show closing to steam of the Meyer valve for respective positions of engine crank.

Let the back valve be adjusted to any desired width, and R be measured when at mid position; with radius R describe the circle L M N O. Strike the steam lap at P R Q; the vectors within P T S U then show opening to steam for the respective crank positions. Admission is given at P by main valve, in the usual manner; after U the opening is also controlled by the R circle, and when the difference vector equals R, as at C S, cut-off takes place. We see from this diagram how decrease of R secures an early cut-off and *vice versâ*, and rapidity of cut-off can be judged by decrease towards S of the vectors of the shaded area. The exhaust circle is governed by the main valve only. (*See Appendix II.*)

Zeuner Diagrams for Link Motion.—We have stated that decreased travel when linking-up causes earlier cut-off. We have now to examine, by Zeuner diagram, Fig. 656, the exact result obtained. Taking the upper diagram first, the case of

Open rods. With throw as radius, strike travel circle F E, and draw valve circle D E for full gear. Draw the link A B, represented by full travel of die, with D A, D B as the distance between die and sheave centres. Through point G, where D A and valve circle intersect, draw E G H to meet the centre line D C in H. Then D H is the diameter of the valve circle in mid gear, and any other circle, as D *e*, will have its diameter bounded by E H; position *e*, between E and H, corresponding to proportionate position between A and C. The centres K L J will form a parabola, lying concave to D and with vertex at J. Draw the lap circle *a b*, and erect perpendicular *d* Y. Y E will be the lead in full gear, and the amount of lead will increase as the travel decreases, shown by the shaded figure, being *d* H in mid position, or equal to the lap.

Crossed rods. In the lower diagram, the full-gear circle O P is set out as before, also the link M N. The crossing point R, made by the further rod M O, is joined to P, when S P bounds the diameters of valve circles. The centres of the circles now make a parabola convex to O, and with vertex at T. Strike the lap circle *f g*, and draw the perpendicular *g* X. X P is the lead in full

Digitized by Google

gear, and the shaded portion indicates the change in lead value. Decreasing towards the centre, it vanishes entirely at w, where the opening is h w. At o v the throw is equal to the lap, and therefore the valve does not open at all at positions on the link corresponding to between points v and s.

Space prevents us giving proof of the above, which, while being only approximate, is quite near enough for practical purposes.

Ideal Indicator Diagrams for Compound Engines.—We examined in Fig. 622 the form of diagram we should expect to obtain from a single cylinder, and in Fig. 624 some actual diagrams from a three-cylinder compound. The forms in the latter case were sufficiently clear to show considerable difference of character over those taken from a single-cylinder engine. We shall investigate the ideal diagrams for two-stage compounds, believing that a careful examination will enable the student to carry the method to three or four-stage compounds. To simplify matters, we shall work with numbers instead of letters. Naturally, in building up such diagrams, the only question we ask from time to time is, 'What is the change of pressure with a particular change of volume?' Two formulæ are needed to meet all cases.

(1) When the volume increases or decreases regularly within the same vessel:

$$p = \frac{P V}{v}$$

(2) When two or more vessels, having each a particular volume, and each containing gas at a particular pressure, are *suddenly* placed in communication:

$$P \text{ final} = \frac{P V + p v + p' v'}{V + v + v'}$$

Also, for simplicity, the hyperbola is taken to represent the relation of pressure and volume. See Fig. 620.

I. *Tandem Engine*, with one cylinder behind the other, and both pistons on one rod. Sketching the cylinders at A, Fig. 657, we adopt the artifice of applying a movable paper strip B to

Digitized by Google

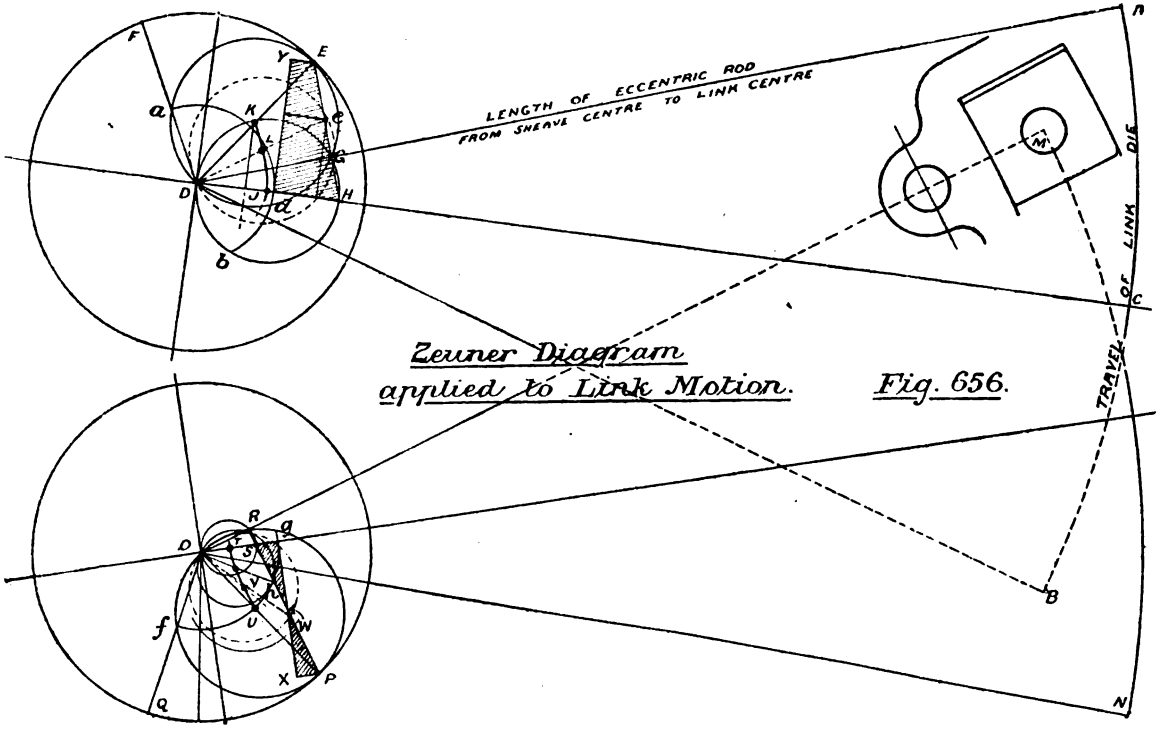

Zeuner Diagram
applied to Link Motion. Fig. 656.

Digitized by Google

represent the position of the pistons at any moment, and aid the memory. The data are as follows:

$$\text{Volumes} \begin{cases} \text{High P.} = 1 & \text{Clearance H. P.} = \frac{1}{8} \\ \text{Low P.} = 3\frac{1}{2} & \text{Clearance L. P.} = \cdot 3 \\ \text{Receiver} = \frac{1}{2} \end{cases}$$

Cut-off: H. P. = ·4. L. P. = ·6.

Initial steam pressure, 120.

Sometimes a large receiver is an advantage, as in Fig. 659; but, in any case, the receiver must be present, even though only represented by the pipes between the H. P. and L. P. cylinders.

Set up the scale of pressures culminating at 120, lay off volumes $\frac{1}{8}$ and ·3 per clearance, and 1 and $3\frac{1}{2}$ for the cylinders. Mark off ·4 to P_o, the cut-off in H. P. Draw a hyperbola through P_o to the end of the whole diagram, and measure P_1 at end of H. P. = 56. Here there is a sudden opening to R and L_c, and, though we know the volumes of these vessels, we do not know their residual pressures from last stroke. Such pressures can be found directly, but only by troublesome formulæ; so we recommend that pressures be assumed, and one complete cycle followed in the first place. The residual pressures then found may be used, a second tour of the cycle made, and so on, till the pressures assumed are equal to those reached at the end of the cycle. The method seems complicated, but in practice is really not so; for it is never necessary to go round more than three times, and often only twice. On the first stroke assume—

$$\text{Receiver pressure } P_R = 15$$
$$\text{L. P. clearance pressure } P_L = 18$$

The latter being fixed by taking a back pressure of 5 lbs., and a compression up to 18 lbs. On the second stroke we measure P_R, and find it has risen to 37, P_L remaining, of course, at 18. On the third stroke, by combining P_L, P_R, and P_L, we have by formula (2):

$$P_2 = \frac{56 \times 1\frac{1}{8} + 37 \times \frac{1}{2} + 18 \times \cdot 3}{1\frac{1}{8} + \frac{1}{2} + \cdot 3} = 45$$

Digitized by Google

And now expansion takes place simultaneously in H. P., L. P., and R, up to cut off in L. P. Using formula (1):

$$P_3 = 45 \times \frac{1\frac{1}{8} + \frac{1}{2} + \cdot 3}{\cdot 4 + \frac{1}{8} + \frac{1}{2} + \cdot 3 + 2\cdot 1} = 25\cdot 3$$

which brings P_3 up to the general hyperbola in the L. P. cylinder. It should be noted, however, that only certain proportions between the three vessels will do this, and the curve may be either above or below the general hyperbola, as in Fig. 659. The rest of the low-pressure diagram, Fig. 657, is easily understood, the compression curve being a hyperbola through P_L. Intermediate points between P_2 and P_3 can, of course, be found by calculation.

Following the H. P. diagram, the steam will now be only in communication with the receiver, and must therefore be compressed in H. P., H_c, and R, from P_3 to P_4, by formula (1):

$$P_4 = 25\cdot 3 \frac{\cdot 4 + \frac{1}{8} + \frac{1}{2}}{\frac{1}{8} + \frac{1}{2}} = 41\cdot 5$$

Being cut off to exhaust before reaching P_4 we assume a convenient point P_R, and measuring, find $P_R = 37$, or the residual pressure we started with.

II. *Compound Engine with cranks at right angles: cut off in L. P. after half stroke (at ·6).* This is worked out in Fig. 658, the being as follows:

Volumes { H. P. = 1 ; $H_c = \frac{1}{8}$; L. P. = $3\frac{1}{2}$; $L_c = \cdot 3$; R. = ·45

Cut off ... H. P. at ·45, L. P. at ·6.

After first cycle it is found that

$P_R = 17\cdot 7$, and P_L is assumed at 18 as before.

Arriving at $P_1 = 62$, the H. P. piston will be at the end of its stroke, but the L. P. piston will be at mid stroke. We therefore make a sudden communication with R, L_c, and half L. P., all which will have the same residual pressure as R, and

$$P_2 = \frac{62 \times 1\frac{1}{8} + 17\cdot 7\,(\cdot 45 + \cdot 3 + 1\frac{3}{4})}{1\frac{1}{8} + \cdot 45 + 1\frac{3}{4} + \cdot 3} = 31\cdot 4$$

Digitized by Google

Next the L. P. piston moves to cut-off at P_8, but the corresponding movement of the H. P. piston is so small that it may be neglected. Expanding regularly in all the vessels, we have:

$$P_8 = 31{\cdot}4 \times \frac{1\frac{1}{8} + {\cdot}45 + 1\frac{3}{4} + {\cdot}3}{1\frac{1}{8} + {\cdot}45 + 1\frac{3}{4} + {\cdot}3 + ({\cdot}1 \times 3{\cdot}5)} = 28{\cdot}6$$

The rest of the low-pressure diagram up to P_L will be understood Following the H. P. diagram, P_8 is compressed regularly to P_4, so

$$P_4 = 28{\cdot}6 \times \frac{1\frac{1}{8} + {\cdot}45}{\frac{1}{2} + \frac{1}{8} + {\cdot}45} = 41{\cdot}7$$

And now there is a sudden communication with the clearance L_C, having a residual pressure of 18; therefore,

$$P_5 = \frac{41{\cdot}7 \times (\frac{1}{2} + \frac{1}{8} + {\cdot}45) + {\cdot}3 \times 18}{\frac{1}{2} + \frac{1}{8} + {\cdot}45 + {\cdot}3} = 36{\cdot}5$$

Then there is a gradual change of pressure, all three vessels being in communication, but the curve is not a hyperbola, because not only are the cylinders of different area, but the piston speed varies considerably. At centre B strike the larger semi-circle, and at centre A strike the smaller semi-circle, to represent respectively the L. P. and H. P. cranks. Assume the H. P. compression point 6 and join 6 A, then draw B 6 at right angles to 6 A; also divide the portions between 5 and 6 on each crank circle into equal parts, and letter as shown. Now the total volume at any point between 5 and 6 can be found, it always being $(H_C + L_C + R)$ + vol. in H. P. + vol. in L. P. Thus at P_5, volume $= (\frac{1}{8} + {\cdot}3 + {\cdot}45)$ $+ {\cdot}5 + 0 = 1{\cdot}375$. For any other position, *w* for example, the volumes in H. P. and L. P. may be found by taking off both the distances * * with dividers and measuring these by the scale F G. We have not space to consider every point, but at P_6 vol. will clearly be ${\cdot}875 + {\cdot}08 + {\cdot}7875 = 1{\cdot}742$. Then,

$$P_6 = 36{\cdot}5 \times \frac{1{\cdot}375}{1{\cdot}742} = 28{\cdot}8$$

Intermediate points between P_5 and P_6 on H. P. diagram being obtained, an arched curve is found as drawn. The H. P. diagram is next completed by drawing a hyperbola through P_6. The L. P. curve from P_5 to P_6 must next be drawn. Now the

Digitized by Google

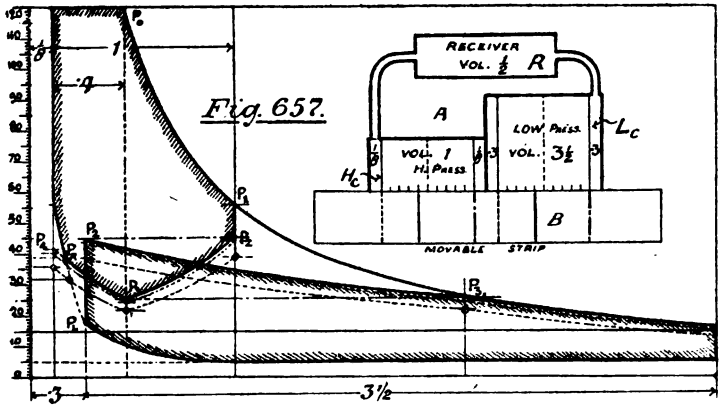

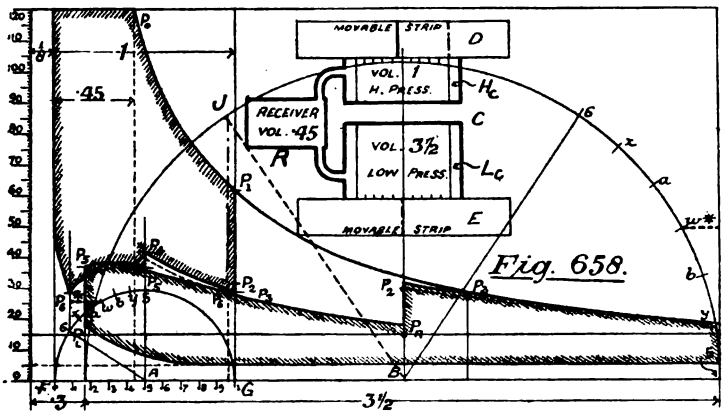

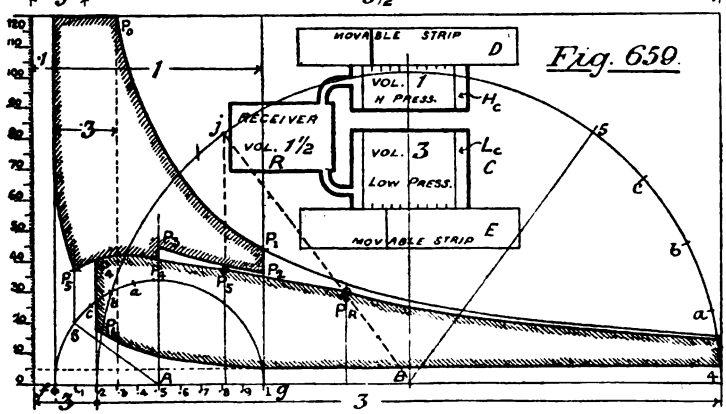

Digitized by Google

pressures have already been obtained for these points, and it only remains to define their volumetric position. To do this take all the points from 5 to 6 on the larger semi-circle, and transfer them to the left side of the circle; thus B 6 is changed to B J. Projecting these downwards we only have to set up the heights previously found, to complete the L. P. curve from P_5 to P_6. The further expansion from P_6 to P_R is only in L. P. cylinder and receiver. Therefore,

$$P_R = 28{\cdot}8 \times \frac{{\cdot}45 + {\cdot}3 + {\cdot}7875}{{\cdot}45 + {\cdot}3 + 1{\cdot}75} = 17{\cdot}7$$

or we have arrived at the residual pressure assumed at first.

III. *Compound Engine with cranks at right angles; cut-off in L. P. before half stroke.* Referring to Fig. 659, and taking the following data:

Volumes { H. P. = 1 ; H_c = ·1
L. P. = 3 ; L_c = ·3
R. = 1·5

Cut-off ... H. P. at ·3, L. P. at ·4.

P_R will be found to be 30·2, while P_L is 18 as before. $P_1 = 44$ by measurement. Then the drop to P_2 is much less than that in Fig. 658 because the receiver *only* is opened to H. P. cylinder, and

$$P_2 = \frac{44 \times 1{\cdot}1 + 30{\cdot}5 \times 1{\cdot}5}{1{\cdot}1 + 1{\cdot}5} = 36{\cdot}2$$

Compressing in H. P. and R,

$$P_3 = 36{\cdot}2 \times \frac{1{\cdot}1 + 1{\cdot}5}{1{\cdot}1 + 1{\cdot}5 - \frac{1}{2}} = 44{\cdot}8$$

A sudden expansion occurs by opening to L_c, and

$$P_4 = \frac{44{\cdot}8 \times \{\frac{1}{2} + {\cdot}1 + 1\frac{1}{2}\} + 18 \times {\cdot}3}{\frac{1}{2} + {\cdot}1 + 1\frac{1}{2} + {\cdot}3} = 41{\cdot}4$$

Then, while L. P. crank moves from 4 to 5 on the large circle, the H. P. crank moves through a similar arc on the smaller circle, at right angles to it, as before. Taking volumes at P_4 and P_5 we have,

$$P_5 = \frac{41{\cdot}4 \times \{{\cdot}5 + {\cdot}1 + 1{\cdot}5 + {\cdot}3\}}{{\cdot}1 + {\cdot}1 + 1{\cdot}5 + {\cdot}3 + {\cdot}61} = 38$$

Digitized by Google

Finally, expanding from P_5 to P_R in L. P. cylinder and receiver,

$$P_R = 38 \times \frac{1{\cdot}5 + {\cdot}3 + {\cdot}61}{1{\cdot}5 + {\cdot}3 + 1{\cdot}2} = 30{\cdot}5$$

the residual pressure.

While a small receiver should be adopted in Case II., a very large one is advisable in Case III. in order to equalise the work in the H. P. and L. P. diagrams. Of course, Case II. compels a large gap in the combined diagram, on account of drop in receiver and low-pressure cylinder, and the arrangement is not, therefore, counselled. The student should compare actual diagrams with ideal ones, and endeavour to distinguish between Cases I. and III.

Correction of Indicator Diagram for Inertia.—The indicator diagram, as obtained from the cylinder, does no more than transcribe the changing pressure and volume on one or other side of the piston. The actual pressures tending to move the piston are not correctly shown, at least not without a small correction; but those transmitted to the crank, which are what we most require to know, are considerably different, on account of the deductions and additions required to respectively start and stop the reciprocating parts at the beginning and end of each stroke. We shall now examine the modifications to be made in the indicator diagram in order to arrive at the tangential pressure on the crank pin; and, to make the investigation as useful as possible, shall take an actual case of a vertical engine, where there is not only the inertia force to contend with, but the dead weight of the moving mass. In a horizontal engine there is no such dead weight, while in a diagonal engine the pressure along the incline caused by the weight is the effective resistance.

Let the crank circle, J K L M, Fig. 660, have a radius of 1′ 9″, as measured by its own scale. Divide the circumference into, say, 20 equal parts, and, with a connecting rod 7′ 6″ long, mark corresponding positions of piston stroke from A to B. Draw the polar curves, K U and U M, by the method given at p. 491, and transfer the ordinates to the base A B, so as to form the velocity

Digitized by Google

curve AXB. Supposing the crank to revolve uniformly at eighty-eight revolutions per minute, the velocity of crank pin,

$$v = 16{\cdot}1 \text{ ft. per sec.}$$

that is, XY should measure 16·1. Dividing this ordinate into 16·1 parts will give the scale of piston velocity.

Next find the acceleration curve, QTR, adopting the method already explained at p. 492, and illustrated in Fig. 454. QT will show, from base AB, the rate of *increase* of velocity, and TR the rate of *decrease*, for the top diagram, viz., when the crank moves through JKL; but on the return stroke, from B to A, lower diagram, RT will be acceleration and TQ retardation. The acceleration scale will not be the same as the velocity scale, but must be compressed in the ratio $\frac{d}{v}$, as explained on p. 492. In other words:

Reading on acceleration scale

$$= \text{reading on velocity scale} \times \frac{v}{d},$$

Produce X horizontally to Q. Then

$$\text{Reading AQ} = \frac{16{\cdot}1 \times 16{\cdot}1}{1{\cdot}75} = 148$$

By dividing AQ into 148 parts, an acceleration scale is therefore formed. (*See Appendix III., p.* 932.)

Now the force required to produce a given acceleration in a given mass (p. 473) is $\frac{w}{g}f$: that is, the inertia force is proportional to the acceleration. The weight of moving parts in this engine is 8030 lbs., and the inertia force at any moment,

$$F = \frac{wf}{g} = \frac{8030}{32{\cdot}2} \times \text{acceleration reading.}$$

The acceleration curve may then be transformed into a *curve of inertia pressure* (*total*) by multiplying by the above fraction or by $8030 \div 32{\cdot}2 = 249{\cdot}4$, that is, the distance AQ must be divided into $148 \times 249{\cdot}4 = 36{,}911$ parts. This has been done along BP.

From the total pressure scale take 8030 lbs., with dividers, and move the curve QR down by that amount, to NP, thus representing the dead weight of the reciprocating parts.

Digitized by Google

It is convenient to make one more scale, to show *pressure per square inch* of piston. The piston area being 491 square ins., divide the total pressure reading by 491 to obtain reading per sq. in.; stepped off at s*t*.

The indicator card for the top of the piston is set out by the unit pressure scale at s*t*, and appears as EQXHB, the bottom of diagram touching the base AB. Similarly FPGA is the card from the bottom of the piston. Now, while QXHB is being drawn by the indicator on top side of piston, AFR would be formed by that connected with the bottom side, and the effective pressure will be the difference of these curve ordinates. Deduct those at F from those at H, and the result is the curve WR. So also VN is the curve of effective pressure on the bottom side of the piston.

Now the actual total pressure to be carried forward to the crank pin will be, during the first half of the stroke, less than that on the indicator diagram by the amount required to set in motion the reciprocating masses, viz., their inertia; and during the second half of stroke the indicated pressure will be increased by the backward pull needed to absorb inertia. Briefly, then, the 'top' card loses by the area ANS, and gains by SBP, the resulting pressure area being NXWP; and similarly the resulting area for the 'bottom' card will be P*t*VN. Setting up the resulting ordinates on the straight base AB, we have the curve A*b d* B for the top and B*e f* A for the bottom of piston, the *total pressures* being written on each ordinate; and in order to equalise the areas the cut-off in top diagram has been placed at ·3 and in bottom at ·6 of stroke, the dead weights having to be supported in the latter case.

We must next distinguish between reciprocating and rotating parts, for only the former cause inertia force. The piston, piston rod, crosshead, and smaller end of connecting rod are reciprocating weights, but the larger end of connecting rod is a rotating weight. As regards the connecting rod itself, about two-thirds may be called reciprocating and the remaining third reckoned as a rotative weight. The reciprocating weights directly affect the indicator diagram, and the latter must be altered, by increased compression or later cut-off, until a fairly even pressure is

Digitized by Google

obtained. The revolving parts must be balanced by opposing weights on the crank shaft.

Curves of Crank Effort.—If the crank be on either dead centre, there is no tangential or turning effect produced by the steam pressure on the piston, all such pressure being received upon the bearings. When the crank is midway between dead points the whole piston pressure is transmitted tangentially, and there is no pressure on the bearings except that due to dead weight. Between the two conditions part of the pressure is transmitted tangentially and part normally. But (p. 491) the polar curve proportionally represents tangential crank pressures, other things being equal. Divide then JO, Fig. 660, into tenths and measure the radii vector of the curve UK in terms of these divisions: the numbers obtained will represent the virtual crank arms in relation to pressures transmitted along ABO. Taking the total pressures from A to B, multiply each pressure ordinate by its virtual crank arm, and the result will be the tangential crank pressure for that position. Setting out these results radially, with the crank circle JKLM as a base line, we obtain the two curves of crank effort J*ghj*L and L*klm*J for the top and bottom of piston respectively. These again are better understood on a straight base, so the base JK is stepped out at CO, KL at OD, and the radial ordinates transferred as vertical ordinates on the new base CD. Curves C*n*D and D*p*C are thus arrived at.

Combination of Crank Effort Diagrams.—Though the fly wheel may equalise very tolerably the crank effort, there is still the difficulty of starting when the crank is at either dead centre. This is not a material difficulty for a factory engine which has only to be started twice a day; but in locomotive and marine practice it would be a very serious obstacle. In locomotives two cranks at right angles are employed, as at 1*a*, Fig. 447, p. 486, while in marine practice it is usual to place three cranks at 120° mutually. The latter gives the best conditions, but the advantage of both will be made clear in Fig. 661.

At (*a*) two cranks set at 90° are each supposed to have effort curves, as in Fig. 660. Plot these with relation to the respective cranks, AA being the top curves, and BB the bottom ones. Then the curve of total effort may be found by super-position, that is, at

Digitized by Google

Acceleration, Inertia, and Crank Effort Diagrams.

Fig 660.

Digitized by Google

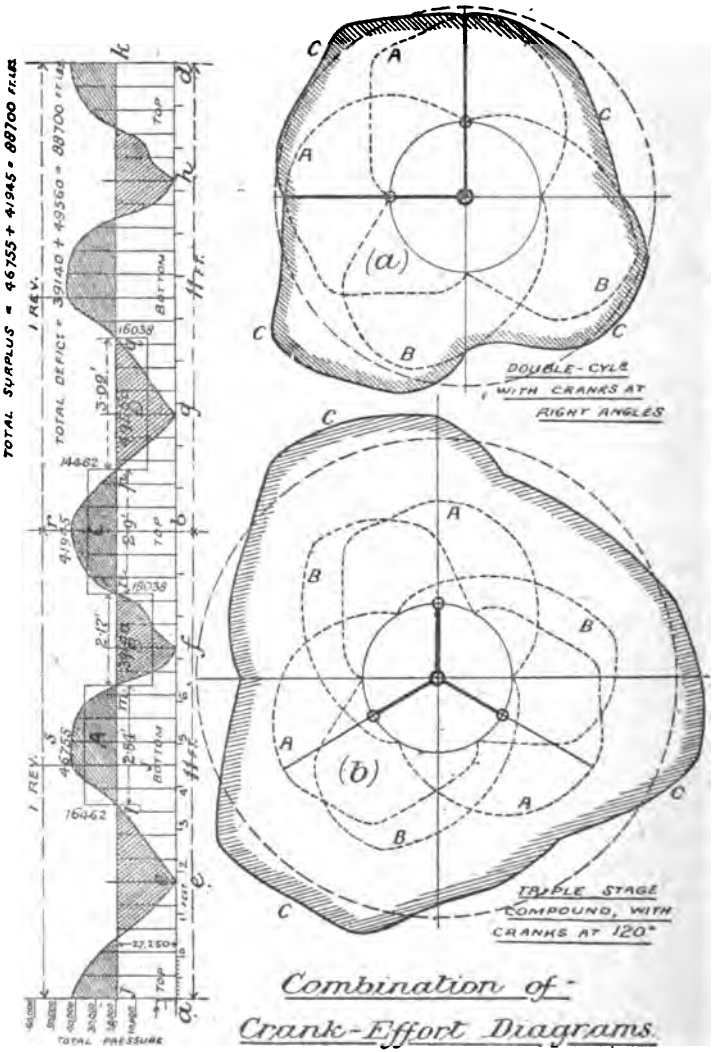

Combination of Crank-Effort Diagrams.

Fig. 661.

Fluctuation of Crank Energy.

Fig. 662.

Digitized by Google

every radius the ordinates of both curves are added to form the resulting curve CC. An average circle is struck, and shown dotted; and a clear conception of the more even turning movement is then obtained.

Three cranks are set out at (*b*), Fig. 661, and the like process followed. The same letters are adopted throughout, and a more regular turning movement results. The differences between the C C curve and the dotted circle may seem little better than before, but they form a much smaller *percentage* of the effort ordinate.

Calculation of Fly-wheel Weight required.—The crank radius, Fig. 660, being $1\frac{3}{4}$ feet, the circumference of the crank circle is exactly 11 feet. In Fig. 662, let *a d* be 22 feet, and let it be divided so that *a e* and *h d* are each $2\frac{3}{4}$ feet, and *e f*, *f g*, and *g h*, are each $5\frac{1}{2}$ feet. On *e f* and *g h* set up ordinates of crank effort on the up stroke, and on *f g* of that on the down stroke, those on *a e* and *h d* each representing half the down stroke effort. Now take the mean of the ordinates on *e f*: dividing the base into 10 parts, measuring at *centre* of each part, adding the ordinates and dividing by 10: the result is 29,500 lbs. The mean of the ordinates on *f g* is found similarly to be 25,000 lbs. Adding and dividing by 2, gives 27,250, the mean effort for the continuous diagram *a d*. Draw *j k* at this pressure above *a d*.

Now the areas, A, C, &c., show surplus work, while the crank travels from *l* to *m*, and from *n* to *p* respectively, while the areas B, D, &c., show a work deficit between *m n* and *p q*. The fly wheel must absorb the work A or C, and give it out again at B or D, and thus tend to equalise the crank effort. The mean pressures and distances traversed have been measured at A, B, C, and D, and are shown by work rectangles. The total surplus and the total deficit of work per revolution are each found to be 88,700 foot pounds, and the greatest of the four work areas A, B, C, and D, is D, or 49,560 foot pounds. This is the amount of energy which the fly wheel must be able to deliver, such delivery decreasing its velocity, while the absorption of energy will in like manner increase it. But the heavier the fly wheel, the less will be the fluctuation of velocity; and the problem is to find the weight of wheel which will absorb the surplus energy and re-deliver it,

Digitized by Google

keeping the fluctuation of velocity within a certain percentage of the mean. Let v = mean velocity, and let

$$\text{Total fluctuation of velocity} = \frac{1}{k} \text{ of } v$$

then the value of k depends on the regularity required, and may vary from 100 for very steady driving, to 20 where constant speed is of little value. With feet and seconds units, let v_1 be maximum velocity and v_2 minimum velocity of the fly wheel at its mean radius, consequent on absorbing and delivering the given energy, and let E *represent the energy area*, or the 49,560 foot pounds of Fig. 662, while the velocity falls from v_1 to v_2.

$$\text{Energy delivered} = \frac{w\,(v_1^2 - v_2^2)}{2\,g}$$

where w is the weight of the fly wheel. But this energy is equal to the area E,

$$\therefore \quad \mathrm{E} = \frac{w\,(v_1^2 - v_2^2)}{2\,g}$$

$$\text{Now } v_1 - v_2 = v \times \frac{1}{k} \qquad v_1 + v_2 = 2v$$

$$\text{and} \quad v = \frac{2\pi \mathrm{RN}}{60}$$

R being radius of gyration of fly wheel.

Putting also the fly-wheel weight in tons,

$$\underline{\mathrm{W}} = \frac{\mathrm{E} \times 2\,g}{(v_1 + v_2)\,(v_1 - v_2)\,2240} = \frac{2\,\mathrm{E}\,g\,k}{2v^2 \times 2240}$$

$$= \frac{\mathrm{E}\,32{\cdot}2\,k\;60 \times 60}{4\,\pi^2\,\mathrm{R}^2\,\mathrm{N}^2\,2240} = \underline{1{\cdot}31\,\frac{\mathrm{E}\,k}{\mathrm{R}^2\,\mathrm{N}^2}}$$

If the fly-wheel diameter be great, and the rim heavy in comparison with the arms, its radius may be taken to the centre of rim section. If the weight of arms and boss are considerable, the following method may be pursued, with strictly correct result: Assume a section of fly-wheel, replacing the arms by a thin disc of equal weight; treat the *whole* cross section of the wheel, through shaft centre, as a beam section, and, referring to pp. 430 and 431,

Digitized by Google

find its modulus, or z; multiplying z by y, the outer radius of the fly wheel will give I, the moment of inertia of area; dividing I by the actual and total area of the fly-wheel cross section will give R^2, the square of the radius of gyration. If inches have been adopted, R must be changed to feet when inserting in the fly-wheel formula. Also v must be measured at radius R. If W does not now agree with the calculated weight, the section must be altered, and a new calculation made.

Area of Steam Port.—Practice has decided certain average speeds of piston in particular cases, and the following list has been thus deduced:—

Mean Piston Speed in Feet per Minute.	
Locomotives	1000
Marine engines	700
Horizontal engines	400
Pumping engines	130

To attain this speed, we must not endeavour to pass the steam through the steam port at a greater speed (according to Rankine) than 100 feet per second.

$$\therefore \text{Ratio of } \frac{\text{cylinder area}}{\text{port area}} = \frac{100}{\text{speed of piston in ft. per sec.}}$$

If the port be much contracted, a lower piston speed will be attained than that intended. We shall close this chapter with some practical examples, together with a few remaining points of theory thereupon raised.

Horizontal Compound Pumping Engines.—Figs. 663–4–5 are views of a pair of compound engines designed and built by the East Ferry Road Engineering Works Company, Millwall, serving as examples of the Stationary or Land engine. The engines are used at the Millwall Docks for pumping water to hydraulic accumulators, under a pressure of 750 lbs. per sq. in. The bed plate H is in two parts, and supports the high-pressure cylinders BB, the low-pressure cylinders AA, the pump cylinders ZZ, and the crank shaft bearings *m m*. The H. P. cylinder is supplied with a main valve D, and an expansion valve E, of Meyer form, the valve spindles being lettered respectively G and F. The

Digitized by Google

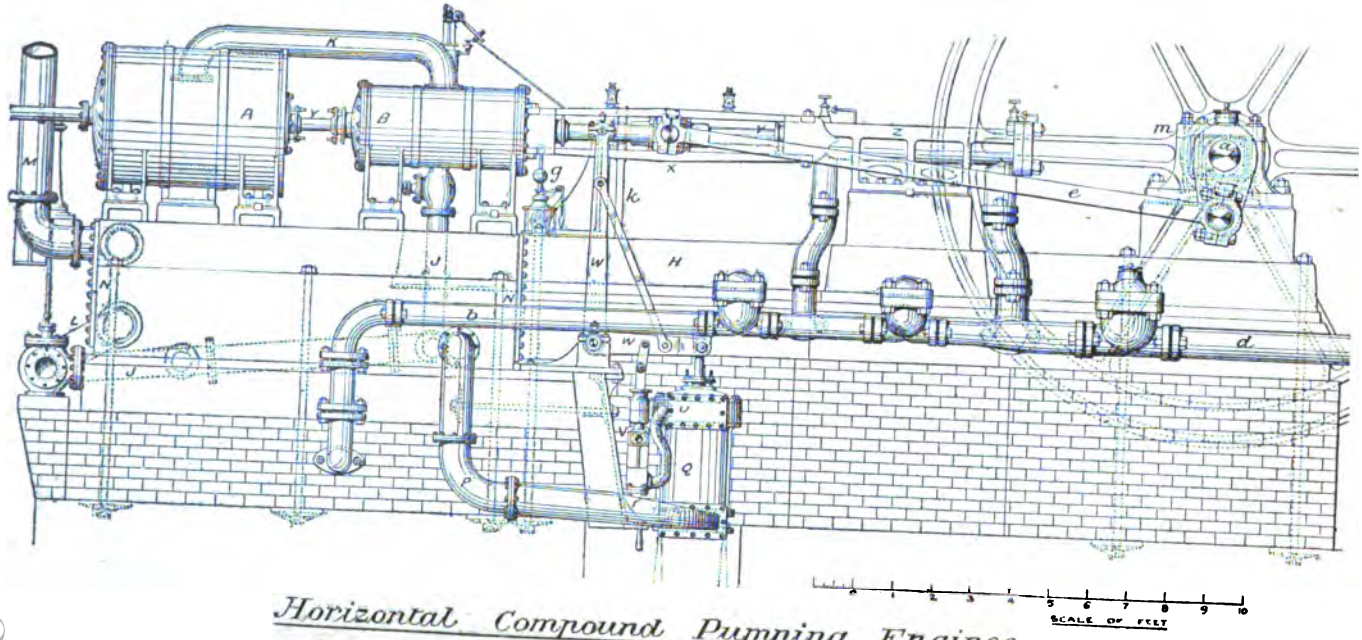

Fig. 663.

Horizontal Compound Pumping Engines.

(BY THE EAST FERRY ROAD ENGINEERING WORKS Co)

(Reduced by permission from "Engineering")

Digitized by Google

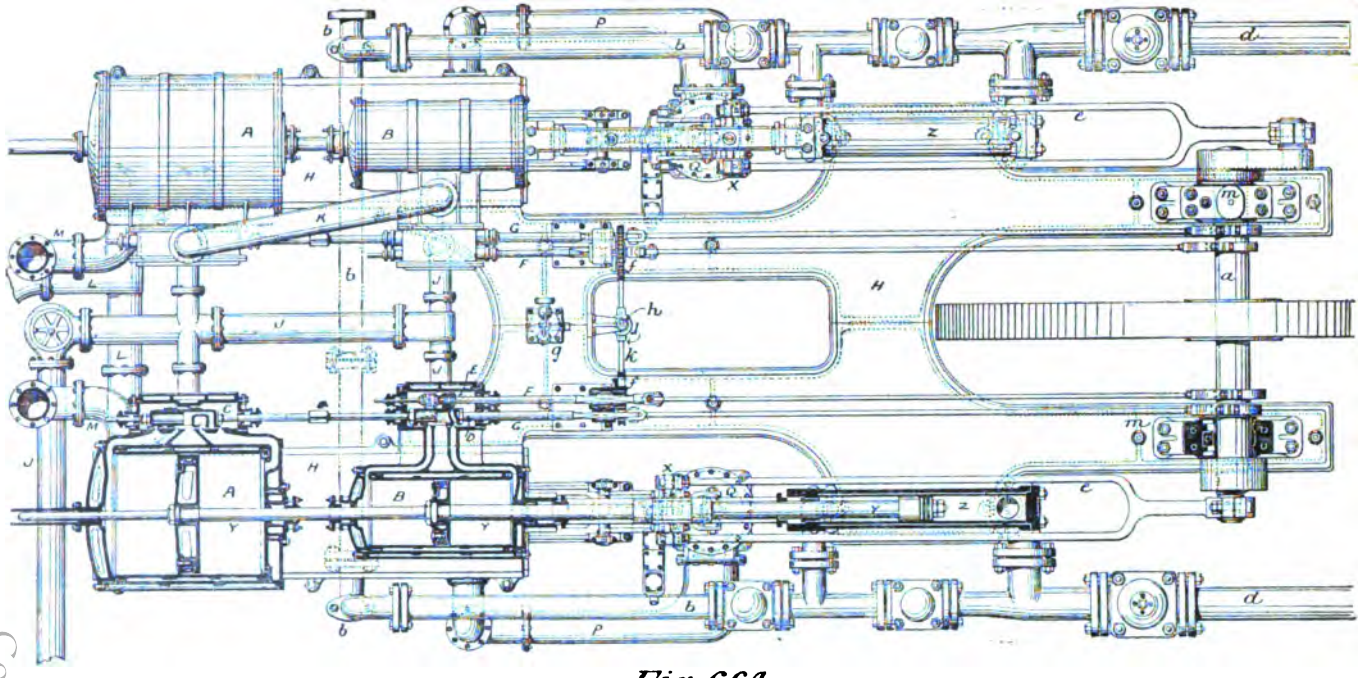

Fig. 664.

Digitized by Google

valve C for the L. P. cylinder is double-ported, but not relieved from steam pressure at the back. The piston rod Y Y, being prolonged, forms the pump plunger, its sectional area being half that of the pump piston, for reasons to be explained in the next chapter. J J is the steam supply pipe to the H. P. cylinder, K its exhaust, as well as supply for L. P. cylinder, and the L. P. cylinder exhausts directly into the condenser, as will be seen in Fig. 665.

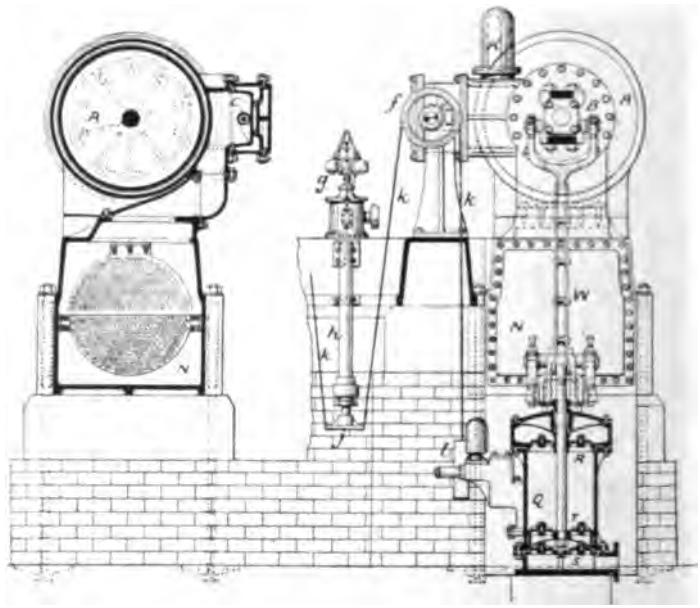

Fig 665.

The surface condenser N N consists of a rectangular casing, containing a nest of tubes. Cold water being allowed to flow in through the pipe M, passes through these small tubes, first through the top half, returning through the lower half, then out by the pipe L. The exhaust steam distributing itself outside the tubes, becomes condensed, is taken away as water by the air pump Q, and delivered to the hot well U; then by the feed pump V to the boiler. The air pump bucket has four valves at T, fixed foot

Digitized by Google

valves S, and delivery valves R to prevent the water returning. The bucket is actuated by the bell-crank lever W W, connected by links to the crosshead X. The connecting rod *e* has a long fork to clear the pump barrel; it is also light in construction, its sole duty being to transmit equalising energy to or from the fly wheel, in addition to the power required to work the valves. The pump suction pipe is at *d d*, and the delivery pipe at *b b*, but full explanation will be left to the next chapter. We must not omit to mention the hydraulic governor *g*, the invention of Mr. C. R. Parkes, M.I.C.E., which has given great satisfaction in its working. The flying balls are driven from the engine in the usual manner, but the sleeve opens a small D valve to hydraulic pressure or exhaust, according to whether it rises or falls. Nothing takes place until the governor has attained a speed of 15 revolutions per minute, when high-pressure water is admitted into the cylinder *h*, and the ram *j* is pushed downward, thus also pulling down the strap *k* and raising the weight *l*. The consequence is that the pulley *f*, on the expansion valve spindle, is rotated so as to increase the lap of the Meyer valve and secure an earlier cut-off, and the action will continue until the speed of the engine has returned to the normal, when the governor sleeve will fall, open the D valve to exhaust, and allow the weight *l* to lift ram *j* to its original position.

Triple Expansion Marine Engines.—Figs. 666 and 667, Plate XVII., are two views of the triple-expansion engines of the Pacific steamer *Iberia*, designed and constructed by Messrs. David Rollo and Sons, of Liverpool. The *bed plate y*, in three pieces, carries the left-hand standards; the right-hand standards K K_I, and K_{II}, being built upon the condenser V. *Cylinders.*—The H. P. cylinder A is 33 ins. diameter, B the intermediate is 54 ins., and C the L. P. cylinder is 88 ins.; while G, H, and J are the respective *pistons*, of conical form to combine lightness with strength, and each having a stroke of 60 ins. To minimise the number of spare parts, the *cranks* Y Y Y, *connecting rods* Z Z Z, *piston rods* D E F, *eccentric* S *and rods* S T U, *links r, gudgeons zz, crossheads v*, and *pump levers jk*, are all made respectively interchangeable; only a small alteration occurring with the rod D, which must have the tail or upper part cut off. *Valves.*—A piston valve *b* is

Digitized by Google

adopted for the H. P. cylinder, packed with flat rings, but distributing steam like a D valve. To save space two piston valves *c* are supplied to the I. P. cylinder, as seen by the valve rods 3 and 4, connected at their lower ends by the strong crosshead 5; and the L. P. valve *d* is double-ported, while being relieved on its back by the hollow piston *h*. Piston *g*, with steam pressure underneath, supports the weight of valve *d*, and the I. P. valves are similarly supported by pistons within *x* and *w*. *Relief valves uu*, on the cylinder covers, are wing valves weighted with springs, serving as safety outlets for condensation water, which might otherwise break the covers when the pistons moved. The H. P. and I. P. slide valves, being vertically above the crank shaft, their eccentrics are set to lead the cranks, but the L. P. valve is moved by the rocking lever Q R, and its eccentrics must therefore follow their crank (see p. 646). The *radius link* is formed of two plates, having the die between and the eccentric rods outside, thus enabling the pin centres to be coincident when in full gear. The steam reversing cylinder *t* has its rod *u* coupled to the weigh bar lever *sp*, which, through the drag link *qr*, moves the link *r* to fore or aft positions; expansive adjustment is given by the screw *q*, and 9 is the valve lever for cylinder *t*. The exhaust steam passes to condenser V through standard K; and air pump X and circulating pump W are worked from crosshead *v* by levers *jlk*. 7 and 8 are oil pumps, and 6 an oil reservoir with gauge. The cylinders are jacketed at sides, top, and bottom; and drains connect to tanks which show the water used.

Condensers.—The advantages of condensation having been discussed theoretically, we will now describe the three principal methods of realising those advantages practically.

The *Jet Condenser*, Fig. 668, applied to most land engines, consists of the condenser A, where exhaust steam E is met by a constant spray of cold water from injection cock G; the air pump B, worked from the engine piston rod; and the hot well C, from which the condensed steam and water is taken to feed the boiler. In order to make B's action continuous, there is a suction valve S and a delivery valve D at each end of the cylinder.

The *Surface Condenser*, Fig. 669, avoids the mixing of cooling water with the steam directly. If such water were dirty or briny,

Digitized by Google

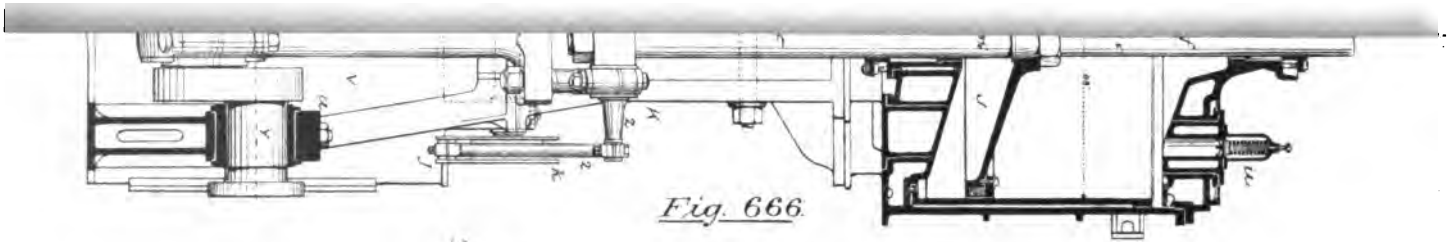

Fig. 666.

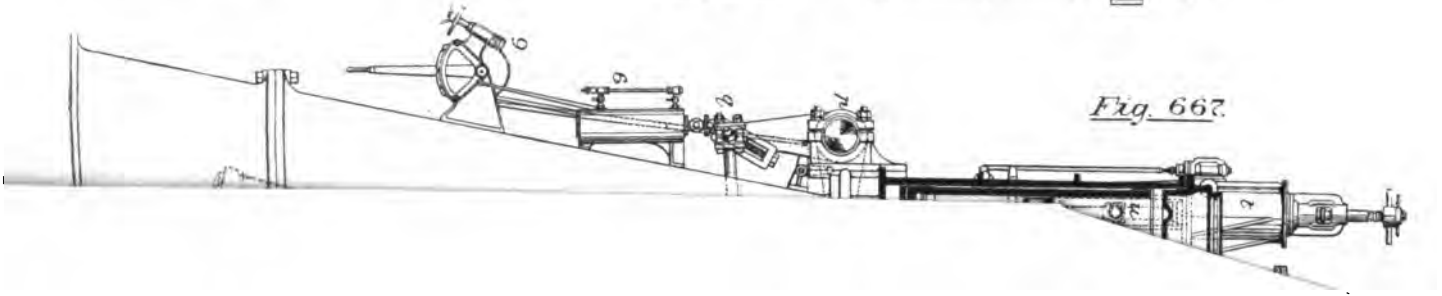

Fig. 667.

Digitized by Google

Digitized by Google

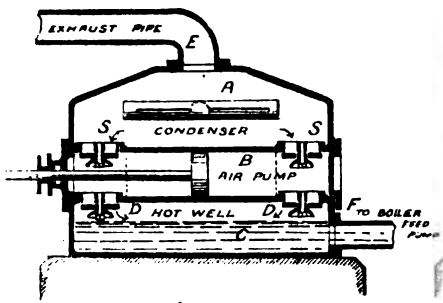

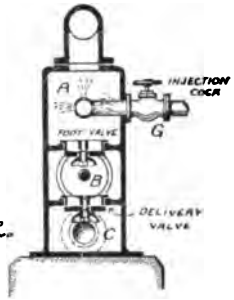

Jet Condenser

APPLIED TO HORIZONTAL ENGINE

Fig. 668

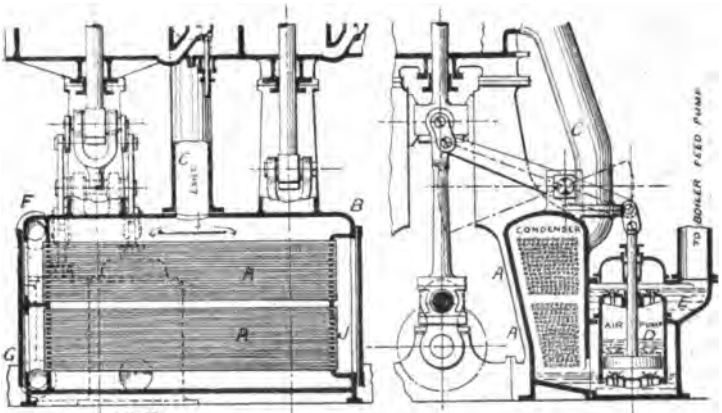

Surface Condenser

APPLIED TO MARINE ENGINE

Fig. 669.

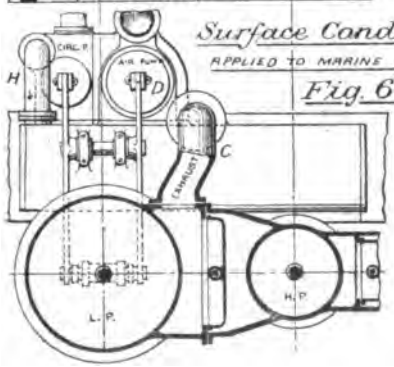

Morton's Ejector Condenser

Fig. 670.

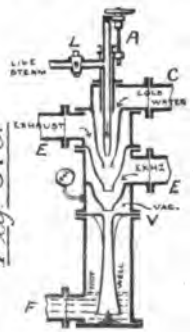

Digitized by Google

a deposit from the feed water occurred on the boiler plates, and the latter were injured through overheating.

A large number of small tubes A A being arranged in the casing B, the exhaust steam C is condensed around them before being removed by the air pump D to the hot well E. The circulating pump, H, takes condensing water from the sea and forces it in at G, through the bottom nest of tubes, into chamber J, along the top nest, and out to the sea again at F. Considerable heat is thus thrown away; but the method is more economical than that of intermittent blowing-off of hot water from the boiler.

The *Ejector Condenser*, Fig. 670, is there arranged for a double-cylinder engine. E E are the exhaust pipes, and C is connected to a cold water tank having, preferably, a little head. Live steam introduced at L starts the action, but is afterwards cut off, and the condensing water adjusted by wheel A. Steam is then condensed so rapidly as to cause a vacuum in chamber V. The boiler is fed from the hot well F, as before.

Further Marine Details.—In addition to the engine details already described, there are the various connections to the propeller, and the propeller itself.

The *Screw Propeller* for the *Iberia* is shown at Fig. 672. The blades A A have a helical or screw surface (see Fig. 35), and are bolted separately to the boss, to allow of adjustment and renewal. The boss is cast steel, and the blades of manganese bronze. E is a section, and C a development of the flat surface.

Fig. 674 represents the position of the parts between engine and propeller, the length of shafting depending on the engine position, which is usually central for stability.

The *Thrust Bearing* (described at p. 506) is shown in Fig. 671 as applied to the *Iberia*. To increase the surface resisting propeller thrust, there are seven horseshoe bearings D D, and seven corresponding collars C C on the shaft. The bearings being faced with white metal, and supplied with oil boxes E E, are strung upon screwed bolts F F, fixed to the main casting A; and the nuts so adjust the bearings, that each takes its proper share of the thrust. G G are ordinary supporting bearings with oil boxes H H. The shaft is cooled by circulating water beneath it, and the hollow

Digitized by Google

horseshoe bearings have water passing in and out at J J. K K are lifting eyes.

The *Stern Tube*, Fig. 673. A is the tail shaft, tapered to fit the propeller, where it is keyed and gripped by a nut and split cotter. A renewable muntz-metal sheathing D is rolled on the shaft, and gives a smooth, non-corrosive working surface. The tube B, bolted to the water-tight bulkheads at H H, and supported by the stern frame at C, has a bush E in which are placed staves of hard wood (*lignum vitæ*), being the best bearing where water is the lubricant. At the other end a stuffing-box, formed by the neck ring F and gland G, prevents water entering the tube.

Compound Locomotive.—The general arrangement of a locomotive being well known, one good typical example will here suffice. The example chosen serves to illustrate the ordinary 'inside cylinder' engine, having cylinders within the frame, the only main difference being the arrangement of steam pipes. It also shows one of the most successful adaptations of the compound principle to locomotives.

Figs. 675–6–7, Plate XVIII., are views of a Compound Express Locomotive for the North-Eastern Railway, on the 'Worsdell and Von Borrie' principle. The *main frame* consists of two plates L L, a cross stay L_1, and *buffer beams* M M: the front beam carrying the *buffers* N N, *draw hook b*, and *coupling screw c*, while the back beam faces that of the tender Q. Between M and Q are placed buffers P, pivot 50, and safety links 88, the pull being taken by the *draw-bar* 6. 35 is the *foot-plate*, 19 the *cab*, to shield from the weather, 34 the *platform*, and *y* the *splasher* for the driving wheel: *f f* are lamp brackets, and *d d* lifeguards. The *cylinders* A and B are bolted between the frame plates, and *slide valves* $a\,a_1$ are placed above the cylinders to suit Joy gear, whose various links Z, Y, X, and W are explained at Fig. 640. There are four *slide bars q q* to each cylinder, and two *motion blocks r r*: *n* and *p* are the *piston rods*, and *m m* the *connecting rods*. The *weigh-bar shaft s* is moved by a hand-wheel and screw at *v*, coupled to lever *t* by the rod *u*. E E are the *driving wheels*, and F F the *trailing wheels*, with J and K the respective axles: the former is known as the *crank axle*, and in the N.E.R. example is turned throughout. The wheel centres are of cast steel, but the

Digitized by Google

tyres are rolled weldless and fit into annular grooves in the wheel rim, to resist centrifugal force. The front end of the frame is supported by a trolley or *bogie*, which permits certain side movement when travelling round curves. H H is the bogie frame, with stay rods T T, C C the bogie wheels, and G G the axles. A block or die 43, curved to a radius from 42, is held by the pin D; and guides 44, similarly curved and forming part of the bogie frame, ride upon the die. If 43 were rigid, the bogie would only swivel round 42, and would only adjust itself to certain curves; but the freedom of 43 on D permits a further angular movement, and the virtual centre 42 is therefore variable. The buffers U U limit the lateral deviation, and springs *g g* return the bogie frame to central position.

Laminated springs, *h* and 13, and helical springs, 45, placed between frames and wheels, lessen the shock due to inequality of permanent way, and the necessary vertical sliding is met by providing special bearings, S, *x*, and 14, termed *axle boxes*, for the bogie, driving, and trailing axles respectively. R, *w*, and 15 are the *guides* in which the boxes rise, and *z* is a wedge to take up wear in the main box.

A hand brake 11 is used in emergency, but the regular work is performed by the *Westinghouse compressed air brake.* The steam pump 51 fills the main air receiver 5, from which auxiliary receivers—one to each carriage, and one, 46, for the engine—are further supplied. From 46 pipes are led to the cylinders 4 4, and the air pressure moving levers 2 2 put the blocks 3 3 on the tyres. Upon exhausting, 3 3 are released by springs. When ascending steep gradients, sand is driven between wheel E and the rail by means of a steam jet from pipe *l*, the sand passing from *sandboxes j j*, down the pipe *k*. *Cylinder cocks* 18 act as relief valves, and are opened after the engine has stood some time.

Boiler 20, and firebox 21. Very little description is needed beyond that at p. 335. Girder stays 53 are of cast steel, and 52 are long stay bolts. A firebrick arch 23 deflects the current of heated gases over the box, and the *ash pan* 2 has doors or *dampers*, both before and behind, for regulating the draught. The draught is 'induced' by the exhaust steam escaping at the

Digitized by Google

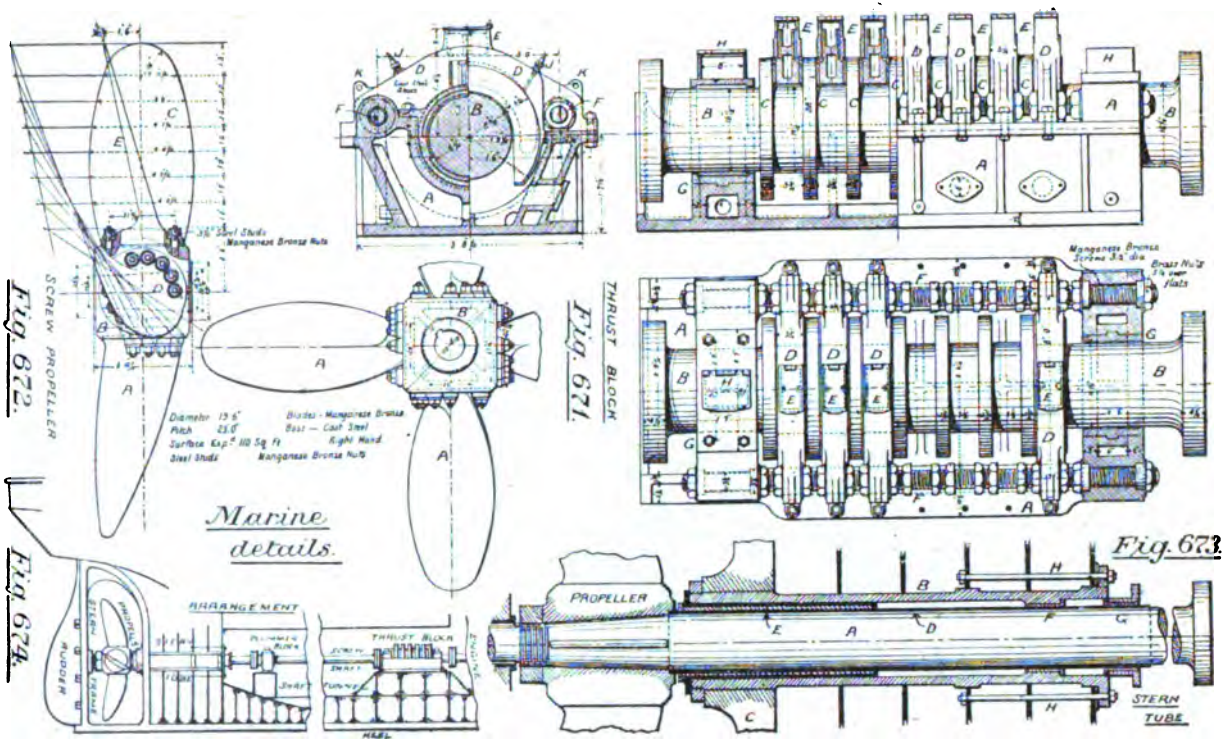

Digitized by Google

blast pipe 39, gradually contracted towards the orifice to cause the necessary velocity; and the *smoke box* 22 must be air tight, so its door 33 is provided with two handles, one for turning the tongue catch, and the other for tightening the screw. A jet of steam from the *blower* 40 causes draught when the engine is standing. The *steam regulator*, 56, has two slide valves worked from handle 34, the main valve 27 being treble-ported, and the 'easing' valve 28 double-ported and small. A pin 55 connects both valves to the gear; but the hole in 27 is slotted, so that when opening, 28 is first moved (easily, being small) and a film of steam admitted between the main valve and its seat. Next, 27 is caught by the pin, and, on account of the relief just given, can be moved without difficulty.

Under ordinary conditions steam first enters the H. P. cylinder B by the pipe 27, exhausts thence to the L. P. cylinder through 30 and 28 (the whole pipe forming a receiver of a capacity equal to B), and finally leaves by the blast pipe 39. But if H. P. crank be on a dead centre at starting, steam must first be admitted to the L. P. cylinder A, and yet be prevented from entering B for fear of blocking the piston. Outside the smoke box a valve box 61 is fixed, having a *starting valve* 59 opened by a rod from the foot plate when required, but at other times kept closed by a strong spring. Pipe 41 takes steam from the boiler to 61, and 57 carries it away to the main pipe 28, entering at 29; and a piston 62, fitting in the valve box 61, is connected to the rod 60 for the purpose of lifting the *flap* or *intercepting valve* 58, which is normally open. When the driver wishes to start, he opens regulator valve 27, and if the H. P. piston refuses to move, he pulls the small lever which opens 59; and steam, wire-drawn to half pressure, enters 61, moves 62 clear to the left and closes 58, then passes by 57 and 29 to move the L. P. piston. Once the engine moves, steam enters the H.P. cylinder by 27, the proper path, exhausts by 30 and 29, and acting on the large area of the flap 58, opens it, and once more valve 59 is closed by its spring.

Instead of feed pumps, *injectors* are now favoured for feeding locomotive boilers, and two of these, 12, 12, are supplied. They draw from the tender through a strong rubber pipe, and deliver through the clack box 25, in which is a non-return valve. A

Digitized by Google

PLATE XVIII.

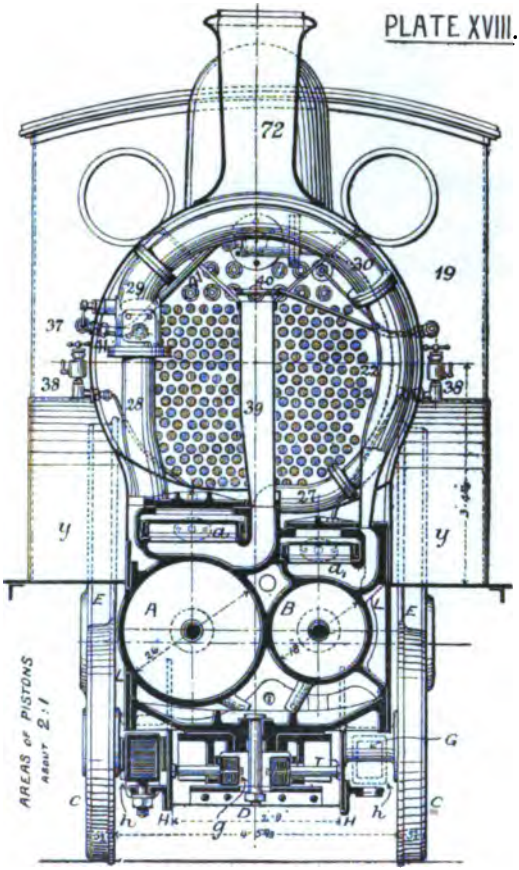

Fig. 677.

Compound Express Locomotive.

for the North Eastern Railway.

(CONSTRUCTED AT GATESHEAD FROM MR WORSDELL'S DESIGNS)

(Reduced by permission from "Engineering")

Digitized by Google

Digitized by Google

double spring-loaded *safety valve*, 31, is placed over the firebox. The valves are inverted cones, fitting easily, and either centre-point can be lifted by the lever 32 to test the working. A safety link placed within the spring holds the lever in case of breakage. 71 is the steam *whistle;* 70, a lamp bracket; and 72 the chimney, of cast iron. 38 are lubricators for the steam chests.

Tractive Force of a Locomotive is usually taken as the mean pull exerted on the *moving* train, and may be estimated from the principle of work. Thus:

Work given by Steam = Work done on Train.

$$\left.\begin{matrix}\text{Total mean pressure}\\ \text{in both cylinders}\end{matrix}\right\} \times \text{stroke} = \text{Tract. force} \times \left\{\begin{matrix}\text{half wheel}\\ \text{circumference}\end{matrix}\right.$$

$$2 \times \frac{p \pi d^2}{4} \times l = T \times \pi r$$

$$\therefore\ T = \frac{p d^2 l}{2 r}$$

The tractive force for any particular starting position can only be found by first ascertaining the crank effort for that position (E); then, by moments:

$$T = \frac{E l}{2 r}$$

Of course, the greatest value of T must not overcome the adhesive force, or slipping will occur (see p. 571). The tractive force *required* is given at p. 569.

Boiler Fittings.—Boilers having been described at pp. 330 to 339, it remains to consider the principal mountings with which they are fitted. (*See Appendix II.*)

Safety Valves.—Lever-loaded valves, p. 482, are not now in favour, on account of the fear of explosion due to sticking. Directly-loaded valves may be either spring or weight loaded. The former has been shown at 31, Fig. 675, Plate XVIII.; and a dead-weight valve is given at Fig. 678, as applied to stationary boilers. A casing A, containing the weights, is hung on a cup-shaped valve resting on the conical end of the pipe B. The figure shows also a low-water float C and a high-water float D, which raise rod E whenever the water falls too low or rises too high respectively. Marine valves are spring-loaded, and the

Digitized by Google

Board of Trade Rule gives half a sq. in. valve area for every sq. ft. of grate surface.

Mudhole Cover.—Manhole covers are merely flat plates covering the raised mountings shown at Figs. 310 and 311: mudhole covers, Fig. 680, are more perfect mechanically, the oval plate A being kept closed by the steam pressure, and further secured, by bolts, to bridge pieces B B. The oval shape permits the plate to be entered narrow-ways, after which it is adjusted into position.

Pressure and Vacuum Gauges.—The Bourdon Gauge, Fig. 681, is now generally adopted for both purposes. Within the casing A is a curved tube C, of flattened section, as at D: it is open to pressure at B, but blind at E. If the pressure increase above the atmosphere, the tube distends, and point E moves outward; but a decrease of pressure below atmosphere still further flattens the tube, and point E moves inward. Both movements are transmitted to sector F, which turns, by a pinion, the pointer, thus multiplying the motion; and a hairspring on the pointer axis takes up backlash. The graduations are made by experimental comparison with a mercury gauge.

Injectors.—There are two ways of feeding a boiler with water when under steam: (1) by a pump either driven from the engine, or steam-driven and self-contained, then known as a 'donkey-pump;' (2) an injector may be used. Pumps will be treated in the next chapter. The injector forces water into the boiler without the intervention of moving mechanism, and the only loss is that due to fluid friction, while the delivery of hot instead of cold water is a gain, not to speak of the diminished strain on the boiler. In Fig. 682, A is a section of the instrument, and B shows its application. The injector represented, being non-lifting, must be placed at the tank bottom, but its parts are essentially the same as those of other injectors. C is the water-cock, D the steam cone, E the combining cone, F the overflow pipe, and G the delivery pipe. H is the steam cock, and J a non-return clack box. Cocks H and C being opened, water is forced into the boiler by the steam; and it long remained a surprise to engineers that steam could feed water against its own pressure. The explanation is this: the velocity of efflux of steam

Digitized by Google

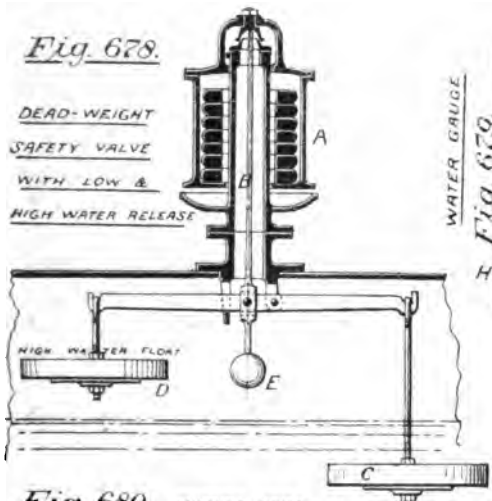

Fig. 678.

DEAD-WEIGHT SAFETY VALVE WITH LOW & HIGH WATER RELEASE

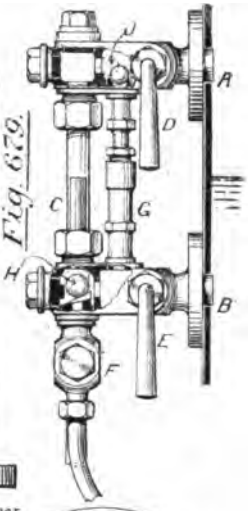

Fig. 679.

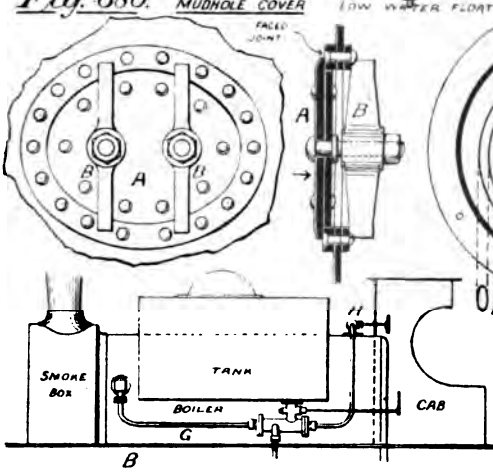

Fig. 680.

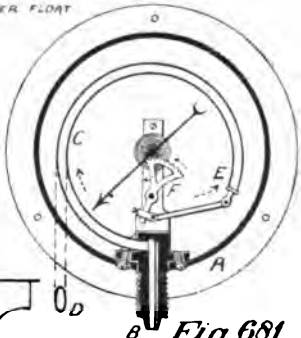

Fig. 681.

BOURDON PRESSURE GAUGE.

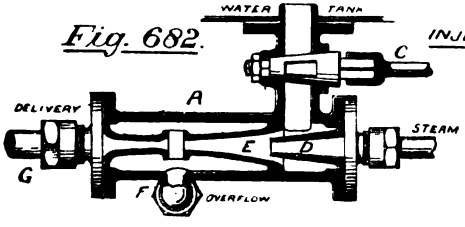

Fig. 682.

INJECTOR

Boiler Fittings.

Digitized by Google

is some 16 or 18 times that of water at the same pressure, and the jet of steam escaping from D is so suddenly cooled by the tank water through C, that it has not time to reduce its velocity to that due to it as water, and therefore succeeds in piercing the boiler water, carrying the tank water with it. An overflow takes place at F when first starting, which, however, ceases when cocks C and H have been mutually adjusted.

A lifting injector must permit of regulation at the orifice D and ring orifice E, for the conditions of vacuum-forming and water-forcing are quite different, and the former must be first satisfied, after which the latter may be met without disruption of the water column. An ingenious method of automatic lifting injector is now in operation, where the throat E is split longitudinally, and one half hinged near the annulus, the 'flap nozzle' thus formed also causing a re-starting, should the fluid tend to disunite.

Slightly altering the cone proportions, and giving the water a few feet of head, produces an injector workable by exhaust steam; but, on account of the variation in pressure, the flap nozzle must be provided.

Other Mountings for the boiler are: a blow-off cock near the firebox bottom, gauge cocks about 3 ins. above and below the water line, fire bars and bearers, furnace doors, mud plugs, fusible plug in furnace crown to melt in case of overheating, and thus cause the fire to be extinguished, clack box (J Fig. 682), damper for regulating draught, a filling branch when no other hole is convenient, and sometimes a scum cock. (*See Appendix II.*)

Combustion.—Combustion or burning is rapid chemical combination accompanied by heat and sometimes light. If considerable noise be caused it is termed an explosion. During combination, heat is produced equal to that required to separate the same elements. The separation of carbon and hydrogen, and their re-combination with oxygen. is what the engineer needs to understand, so we will consider the burning of a simple hydrocarbon like marsh gas, shown by the formula:

Marsh gas	+	Oxygen	=	Carbon dioxide	+	Water (steam)
CH_4	+	$2\,O_2$	=	CO_2	+	$2\,H_2O$

a case of complete combustion, for no single element remains.

Digitized by Google

Taking the atomic weights of C, H, and O, as 12, 1, and 16 respectively, we have:

	Marsh gas	+	Oxygen	=	Carbon dioxide	+	Water
	$(12 + 4)$	$+ 2(16 \times 2)$		=	$\{12+(16\times 2)\}$	$+ 2(2 + 16)$	
that is,	16 lbs.	+	64 lbs.	=	44 lbs.	+	36 lbs.
or,	1 lb.	+	4 lbs.	gives	2·75 lbs.	+	2·25 lbs.

Again, 1 lb. of carbon burnt to CO_2 gives 14,500 thermal units, and 1 lb. of hydrogen burnt to H_2O gives 62,032 units. In 1 lb. of marsh gas there is $\frac{3}{4}$ lb. of carbon and $\frac{1}{4}$ lb. of hydrogen.

		Units.
$\therefore \frac{3}{4}$ lb. Carbon + O	gives $14{,}500 \times \frac{3}{4}$	= 10,875
$\frac{1}{4}$ lb. Hydrogen + O	gives $62{,}032 \times \frac{1}{4}$	= 15,508
	Total . .	26,383

Experimentally we obtain a total of 23,582 units, or 2801 units has been required for decomposing the C and H.

Good dry bituminous coal contains on the average, by weight,

Carbon, 83·5 % Hydrogen, 4·6 % Oxygen, 3·15 %

the remaining 8·75 % being Nitrogen and Sulphur, inactive elements. Taking 100 lbs. of fuel the 3·15 lbs. of oxygen is already united to $\frac{1}{8} \times 3{\cdot}15 = {\cdot}4$ lb. of hydrogen as water, and the hydrogen does not assist combustion; so we have left:

83·5 lbs. of Carbon 4·2 lbs. of Hydrogen

Now 12 lbs. of C unite with 32 lbs. of O, or as 1 : 2·66; and 2 lbs. of H require 16 lbs. of O, or as 1 : 8.

	lbs. of O.
$\therefore$ 83·5 lbs. C require $83{\cdot}5 \times 2{\cdot}66$	= 222
and 4·2 lbs. H require $4{\cdot}2 \times 8$	= 33·6
Total weight Oxygen for 100 lbs. coal	= 255·6 lbs.

or 2·5 lbs. of Oxygen is needed to burn 1 lb. of coal. But air is composed of 77 parts Nitrogen to 23 of Oxygen, by weight.

$\therefore$ 23 : 100 :: 2·5 = 10 lbs. of air per lb. of fuel.

Digitized by Google

Again, we have per lb. of such fuel ·835 lb. of C and ·042 lb. of H,

		Heat units.
∴ ·835 lb. Carbon + O	gives 14,500 × ·835 =	12,107
·042 lb. Hydrogen + O	gives 62,032 × ·042 =	2,605
	Total units . . .	14,712

By careful laboratory experiment a lb. of such coal is found to have a *calorific power* of 14,701 thermal units, and evaporate 15 lbs. of water at 212°. Also 12 lbs. of air are required per lb. of fuel. (*See Appendix II.*)

In actual practice considerably less heat is developed, and the evaporation is good at 10 lbs. of water, being commonly 6 or 8. Also 24 lbs. or 312 cub. ft. of air are required, with *natural draught*, to dilute the gases and allow the air to reach the fuel.

Forced Draught.—The essential advantage of forced draught lies in the fact that a smaller dilution of the gases can be allowed, 18 lbs. of air per lb. of fuel, or only 1½ times what the chemist requires. In consequence, a higher temperature is obtained, the grate and heating surface being much more efficient; and thus a smaller boiler will serve the purpose, a great advantage in torpedo boats.

The air must not be solely fed through the fire bars, or a tongue of flame would meet the stoker whenever he opened the fire door. The closed stokehold, the earlier method of solution, places the stoker in a *plenum* of air at a moderate pressure, which enters the furnace as usual. The later method, the closed ash-pit, requires a box-shaped fire door, into which air is fed as well as to the ashpit; but the air to the latter is at a much lower pressure. The air from the box door passes to the coals through holes in the baffle-plate, and the supply is cut off automatically whenever the door is opened. Both methods still have their advocates. The pressure is caused by a fan. (*See Appendix II.*)

Waste of Fuel is largely due to formation of smoke and incomplete combustion, the carbon partly being burnt to CO. Alternate or continuous firing, by careful men or mechanical stokers, and a sufficient supply of air, are the only remedies. The gases also pass up the chimney at a greater heat than 600°,

Digitized by Google

the best temperature (that of molten lead), for they are also required to cause draught: a quarter of the total heat is thus wasted, and can only be partly obviated by forced or induced draught.

The Gas Engine.—It was early discovered that steam and the steam boiler might be dispensed with if a mixture of gas and air were fired within the cylinder, the arrangement constituting a true heat engine, both pressure and temperature rising at the moment of explosion.

Supposing marsh gas to be mixed with just enough air for complete combustion, a sharp explosion occurs when fired, but if either gas be diluted by too much of the other, combustion is retarded and the explosion is weaker. Dugald Clerk in 1880 made experiments with coal gas and air, and found the sharpness of explosion could be tempered as desired; also, that the pressure was better sustained with slow combustion. This is our experience with heavy ordnance. Treating the gun as an engine cylinder, rapid explosion causes high pressure, followed by pretty rapid fall, and but a small work area is enclosed. Slow-burning powder gives a lower pressure curve, which rises somewhat slowly, but is better sustained, and a much larger work area results. Clerk showed that the best working proportions, using lighting gas, was 1 of gas to about 11 or 12 of air.

The first practical gas engine was produced by Lenoir in 1860. It was double-acting, charging with air and gas during a half stroke, firing during the remaining half, and expelling the products during the return stroke. Passing over the Otto and Langen engine of 1867, and the Bisschop of 1870, we reach the first commercially successful engine, the Otto-Crossley, introduced in 1877 by Dr. Otto, who applied the cycle of operations originally proposed by Beau de Rochas in 1862, the strokes being as follows:

1st stroke: outward	→	charge of gas and air.
2nd stroke: inward	←	compression of the charge.
Dead centre		ignition.
3rd stroke: outward	→	expansion of the gases.
4th stroke: inward	←	expulsion of burnt gases.

An explosion only occurs, therefore, every fourth stroke, and a heavy fly-wheel becomes necessary.

Digitized by Google

But one detail has caused some trouble to all inventors, the question of igniting the explosive mixture without escape of gas. Three methods have been used:—(1) *Flame ignition*, where a portion of burning gas is carried through an aperture in the slide when the latter is just closing. This method has been used extensively, but occasions frequent misfires when the small aperture becomes carbon coated. (2) *Tube ignition*, Fig. 682 *a*. Here the blind tube A is kept at a white heat by the bunsen flame C, supplied with gas from B, and whenever the timing valve

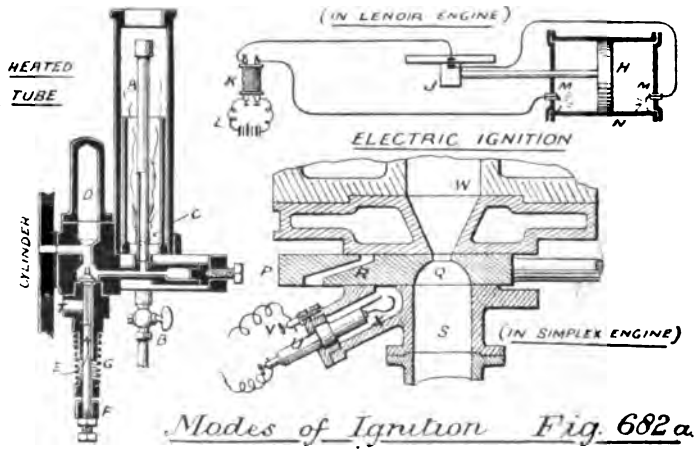

Modes of Ignition Fig. 682 a.

E is opened by the spring G, the charge, which has been compressed into the ignition chamber D, then ignites. F is the boss of a lever which keeps valve E on its upper seat, and allows the contents of the tube to be cleared through hole T. Small engines have no timing valve, ignition only occurring when the charge is compressed into the tube. Iron tubes have to be replaced every fortnight at the latest. (3) *Electric ignition* was adopted in the Lenoir engine, but in a faulty manner. The current from battery L was intensified by the coil K. It passed through insulators at M M, and by platinum points through the cylinder N, the circuit being closed by the crosshead J, causing sparks at M M. The covering of the platinum points with carbon or watery vapour

Digitized by Google

was the cause of failure.* In the Simplex engine a constant shower of sparks takes place in the chamber X, the current passing through the insulator U and back by V. In the figure the cylinder is being charged from S, through Q, but when the slide moves to the right, R connects W with X, and ignition occurs with certainty. (*See Appendix I.*)

We may now describe the SIMPLEX ENGINE (Système Delamare-Debouteville et Malandin), Figs. 683 to 688, as a type of a well-designed gas engine. A is the cylinder, supported on the bed plate H, and surrounded by a water jacket B, which also protects the slide casing and exhaust outlet; N is the mixing chamber, and C the piston or plunger. D is the connecting rod, E the crank, F the balance weights, R the crank shaft, and G G the fly wheels, having a pulley P attached for driving purposes. Pipe J is always open to air, and the gaspipe K admits gas when cock L is opened. But such gas is only allowed to enter the cylinder at proper times, viz., when the charging valve M is opened by projection *h* on the slide spindle *g*. As the cycle occupies two revolutions, the shaft Q (which moves the slide *d* backward and forward through the disc crank *f*) makes two rotations to one on the main shaft, and the wheels at R and S together have a velocity ratio of 2 : 1. The charging and ignition having been described, the governing and exhaust arrangements remain. Taking the former, shown in Figs. 687 and 688, the method adopted, as in other gas engines, is to cut out one or more chargings when the engine speed increases. Upon the spindle *h* is a small tapered 'rocker' *j*, and when this is allowed to catch the stem *k* of the charging valve the latter is opened. The governor is a pendulum *n l*, whose lower end is lifted to the right by the rocker *j*, and, being allowed to return freely, its time of fall is invariable. Noting that the rocker *j* is constantly depressed, as in Fig. 688, by a spring, suppose engine speed to be normal, and *j* to be moved to the right, lifting the pendulum. Returning, the pendulum bears slightly upon the rocker, catch *m* lifts *j* to the horizontal, and the valve is opened. But if the slide travel too quickly, *m* misses *j* when returning, and the result is a 'misfire,'

* M. Debouteville inclines to the former, Prof. Wm. Robinson to the latter cause.

Digitized by Google

Fig. 684.

100 H.P. "Simplex" Gas Engine.

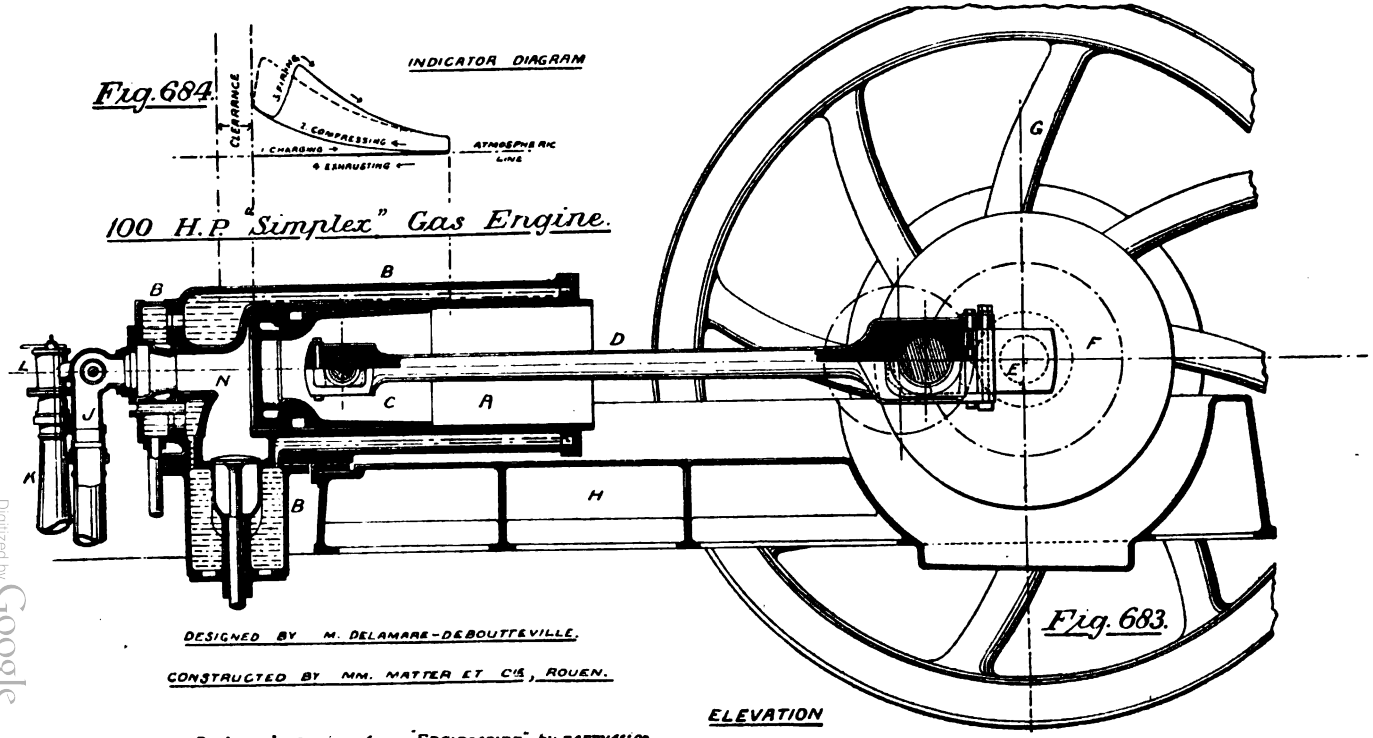

Fig. 683.

DESIGNED BY M. DELAMARE-DEBOUTTEVILLE.

CONSTRUCTED BY MM. MATTER ET Cie, ROUEN.

ELEVATION

Reduced copies from "Engineering", by permission.

Digitized by Google

PLAN

Fig. 685

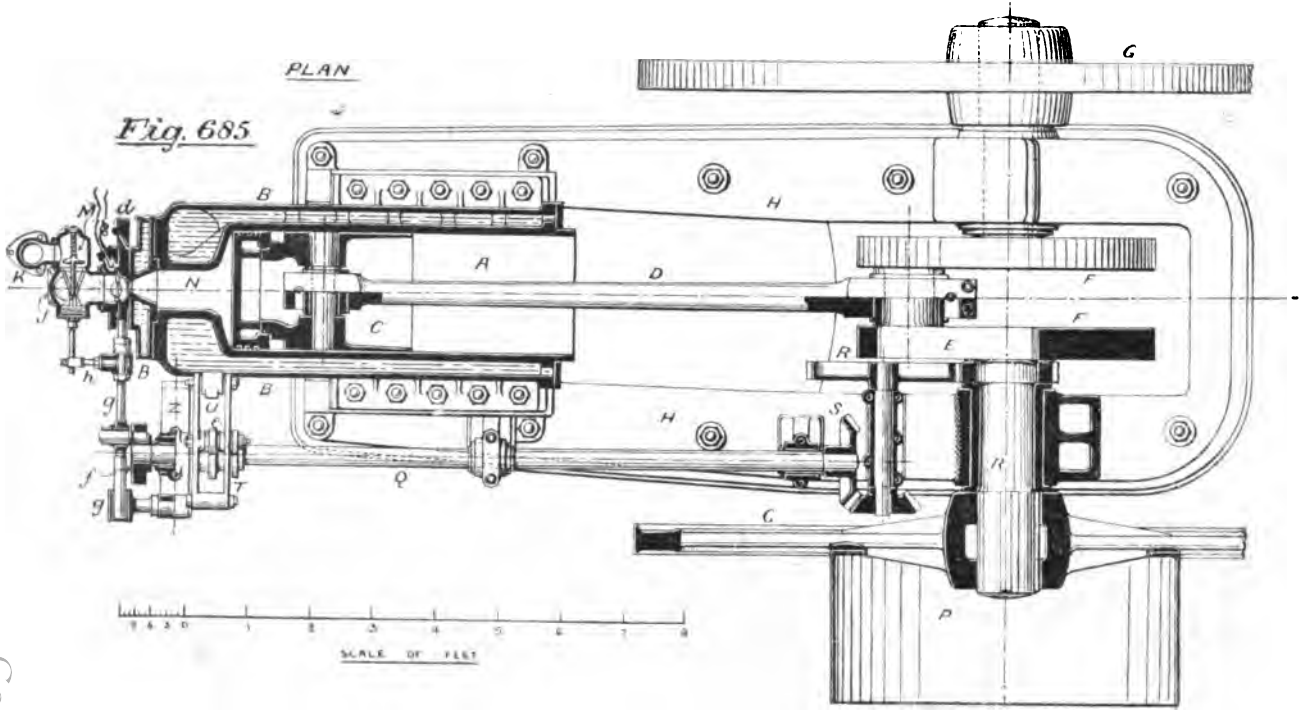

Digitized by Google

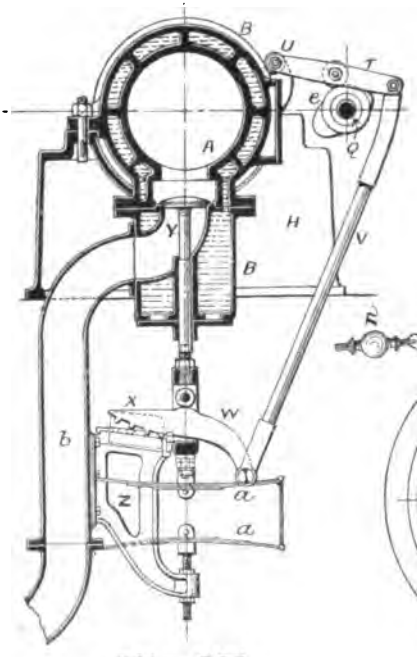

Fig. 686.

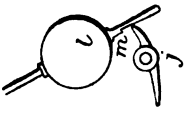

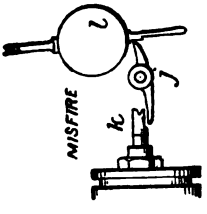

Fig. 688.

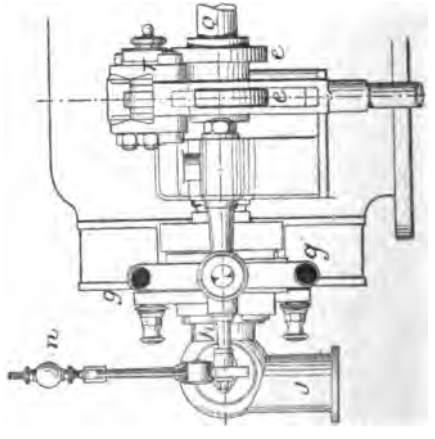

Fig. 687.

Details of Simplex Engine.

Digitized by Google

as shown in Fig. 688. The pendulum may be adjusted to the greatest nicety by raising or lowering ball *n*. The method of opening the exhaust valve is seen in Fig. 686. A cam *e* on the shaft Q lifts the lever T, pivoted at U, and, through rod V, the 'crocodile jaw' W; thus raising the valve against the springs *a a*. W has a shifting fulcrum at X, giving a larger leverage at first, and a quicker opening afterward.

Fig. 684 shows the indicator diagram obtained, which still further illustrates the Otto cycle. One difference in the Simplex working is noticeable; the mixture is over-compressed, that is, a small return motion is made, after leaving the dead point, before ignition occurs, and the force of the explosion only reaches the crank when it is in a better position, viz., at 15° from dead centre.

For the best economy, gas engines should work with 'poor gas,' as produced by the Dowson plant in England, and the Buire-Lencauchez in France: the latter is used in conjunction with the Simplex Engine. Rich lighting gas is expensive for large engines. (*See Appendix II.*)

Petroleum or Oil Engines, like gas engines, are of the internal combustion type. Petroleum occurs naturally in Russia and America, but is also obtained as paraffin by shale distillation. It is highly complex, consisting of several liquid hydrocarbons having different boiling points: thus, when heated, giving off first the lighter oils, then the burning and lubricating oils, and lastly paraffin wax or vaseline, leaving a residuum. The light oils, including benzoline and naphtha, are dangerous, flashing at 73° F.; while the heavy or lighting oils, like kerosene, are thoroughly safe, resisting the flame of a match, or even the electric spark. But the heavy oils are difficult to prepare for the motor, where they are to be intimately mixed with air to form the charge: if vaporised at low temperature, a troublesome residue is formed, while gasefication at high temperature produces also tar.

In 1888 Messrs. Priestman Bros. acquired the Etève patents (where *spraying* with air and evaporating in a hot chamber was first proposed), and after considerable experiment produced the first practically successful engine working with safe oil, doing for

Digitized by Google

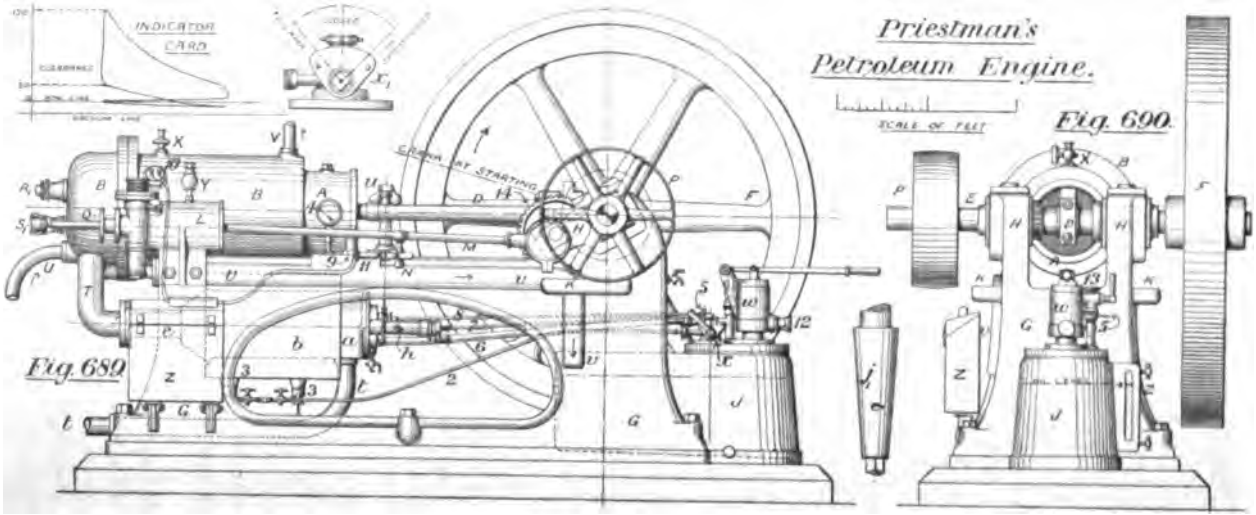

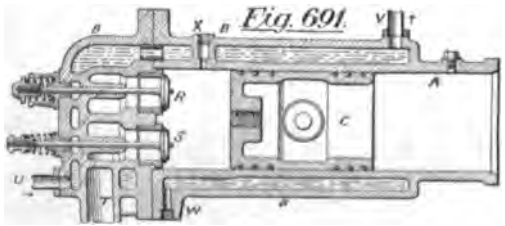

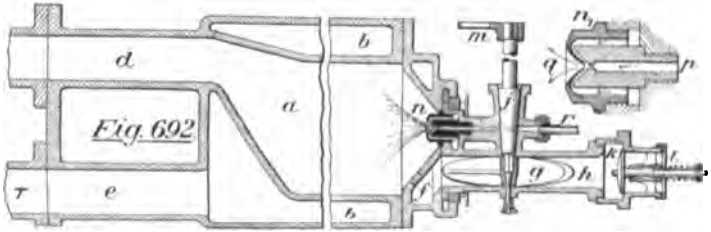

Digitized by Google

Oil what Otto had done for Gas. While some air was required for spraying, a further quantity was introduced to complete the explosive charge, and the mixture then fired, the combustion being chemically identical with that in the gas engine or boiler flue. To prevent gasefication, the hot chamber was kept at saturation temperature, and the engine cycle was that of Beau de Rochas, now adopted in all oil engines.

Figs. 689 to 692 show the present form of Priestman's engine, Figs. 689 and 690 being side and end views respectively. A is the cylinder; B a jacket, through which water is circulated, entering at U and discharging at V; and X an escape cock, removable for insertion of an indicator. C is the plunger piston, D the connecting rod, E the crank, F the fly wheel, and P the the driving pulley. The main frame G has cast with it the bearings H H and drip cups K K, the oil tank J, and the air passage V, from air pump to oil surface. The air pump L, supplying pressure air for urging forward and spraying the oil, has an adjustable suction valve, and a lubricator Y. The pump rod M travels at half the speed of the connecting rod (due to gear at 14), its prolongation Q opening the exhaust valve S_1. A gauge 4 shows air pressure, which is regulated by relief valve 9. The igniter Z is an Edison-Lalande battery, capable of working four months without attention, the current being intensified by an induction coil; and while one pair of primary wires is connected to terminals 10, and passes through porcelain insulators to platinum points within the cylinder, the other pair couples to a brass spring 11, and the circuit closes when the knob N makes contact with 11, firing the charge. No difficulty occurs, as in the Lenoir engine, from carbon deposit or watery vapour. *h* is the spray-maker, and *a* the vaporiser, the latter kept at constant temperature by the exhaust gases, which escape by pipe T and chamber *b*, to the outlet *t*. Lamps 3 3 and hand-pump *w* are both for starting purposes, while 8, 7, 6, and 2 are oil or air pipes. Gauge *z* shows oil level in tank, and the governor *u* acts on the oil-admission plug.

Fig. 691 is a *vertical* section of the cylinder, showing R the inlet valve, and S the exhaust valve; the former opened automatically by piston suction, and the latter by lever S_1, struck by

Digitized by Google

rod Q. The charge is prepared in the vaporiser *a* (shown in *horizontal* section at Fig. 692), and afterwards drawn by inle pipe *d* through valve R: the exhaust gases pass by *e* to the chamber *b*. The spraying nozzle *n*, shown to larger scale at n_1, consists of an oil passage *p*, and a re-entrant cap *q*, forming an air passage. Air and oil being ejected at equal pressure, meet at the mouthpiece, and are there converted into a vaporous spray filling the chamber *a*. The oil pipe *r* is seen in elevation at 7, and the spraying air enters by pipe 8. The auxiliary air for completing the charge is induced by the suction through valve *k* (being there filtered through cotton wool) and along pipe *h* to annular chamber *f*, whence it passes to the vaporiser; and a shutter *l* may be adjusted by hand, or closed when standing. Regulation of oil and air is effected by the action on plug *j* of the governor *u*, whose vertical spindle is connected to the lever *m*, depressing the latter when the balls rise. The oil hole is seen, at j_1, to be pear-shaped, closing or opening towards the pointed end, never being entirely shut, but full open when the engine is at rest. The throttle valve *g*, on plug spindle, tends to close simultaneously with the oil hole, and thus the air and oil proportions are always correct.

The difficulty of starting is simply overcome. A little pressure from pump *w* forces oil and air, by two pipes at 2, to the lamps 3, 3, the six-way cock *x* being turned leftward (see x_1). The lamps are then lit, and the vaporiser made somewhat hotter than usual. Moving *x* to shut, the fly-wheel must be turned till the circuit closes at N, and the crank takes the dotted position; and the relief valve 9 being screwed down, a pressure of about 25 lbs. is produced by the hand pump *w*, occupying about 10 minutes. Cock *x* is next opened to spray-maker, and the sprayed oil enters the vaporiser for 10 or 15 seconds. Lastly, cock 5 being turned on, a quantity of compressed air passes through 6 to complete the charge, which, now having a high pressure, opens the inlet valve R and ignites, the crank rotating till the next impulse, produced automatically.

Oil supply in J is sufficient for some 12 hours' run, but may be easily replenished by pump *w* or by gravitation, the suction pipe being coupled to 12, while an air pipe from 13 to the

Digitized by Google

external oil-tank serves to equalise the pressures. Lubrication is effected in the usual manner, at all parts of the engine except the cylinder; the oil condensed within which is ample for the purpose.

Several forms of oil engines are now made by other firms, but none spray the oil. In some, liquid oil is evaporated in a hot chamber, forming vapour and gas, which is mixed with air and fired as usual; and it is said no deposit occurs in ordinary working. In others, perfect oil-gas is produced, and then exploded with air, but the engine must be often cleaned from tarry matter. (*See Appendix II.*)

Digitized by Google

CHAPTER XI.

HYDRAULICS AND HYDRAULIC MACHINES.

Fluids are defined by their negative property of non-resistance to change of shape, and may be highly compressible, as gases; or very slightly compressible, as liquids. Hydraulics treats of the flow of water in pipes and canals, and with that liquid—assumed incompressible—we shall only here concern ourselves.*

Head, Pressure, and Velocity Energy.—The atmospheric pressure supporting 30 ins. of mercury, the water barometer has a height of 34 ft.; thus a 'head,' as it is termed, of 34 ft. balances a pressure of 14·7 lbs. per sq. in., and

$$H = \frac{34}{14{\cdot}7} = 2{\cdot}3p.$$

A vertical gauge tube C, Fig. 693, being inserted in a pipe B, water rises in C to a height proportioned to the pressure; then, *connecting head and pressure*,

$$PA = GHA$$

$$P = GH \qquad \text{and } H = \frac{P}{G}$$

where P = supporting pressure in lbs. per sq. ft.; H = height of column, and A its area; and G = weight of a cubic ft. of water. The latter varies from 62·4 at 39° F. to 59·8 at 212° F. for fresh water, but is usually taken at 62½ lbs.; and 64 lbs. for sea water.

* For numbers regarding compressibility of water, see pp. 363–4.

Digitized by Google

To connect head and velocity: a water particle of weight w, while at A, Fig. 694, has a potential energy $w\mathrm{H}$, and when fallen to B a kinetic energy of $\frac{wv^2}{2g}$. Neglecting friction and other losses,

$$w\mathrm{H} = \frac{wv^2}{2g}$$

$$\text{and } v = \sqrt{2g\mathrm{H}} = 8\sqrt{\mathrm{H}} \text{ nearly.}$$

When water flows steadily between reservoirs kept at constant level, any portion of water will, neglecting friction and viscosity, be in possession of an unvarying amount of energy, which may be due to head, pressure, velocity, or all three. In Fig. 695, a pressure column A falls short of level C, a portion of the head energy having become kinetic; and the total head $\mathfrak{H}$ consists of H due to unexpended fall, $\frac{\mathrm{P}}{\mathrm{G}}$ due to pressure, and $\frac{v^2}{2g}$ due to velocity. Multiplying each by w gives the respective energy, and the *energy in one lb. of water*

$$\mathfrak{H} = \mathrm{H} + \frac{\mathrm{P}}{\mathrm{G}} + \frac{v^2}{2g}$$

An interesting experiment, due to Froude, is given in Fig. 696. Two tanks, A and B, have discharge pipes C and D, the former throttled at E, and the latter expanded at F, causing the velocity energy to become respectively greater or less than at the tank mouth, as shown by pressure columns. Further, the horizontal pressures at E and at F exactly balance, and there is no tendency to move the pipe.

The Jet Pump.—With sufficient throttling, the pressure may be reduced below that of the atmosphere, the principle employed in Prof. Jas. Thomson's jet pump, Fig. 697. Water, under a good head, enters pipe D, and passing through the nozzle at a high velocity, produces a partial vacuum around it. More water entering at A to fill the gap, the combined streams discharge at B, and thus a field may be drained or other work performed.

Discharge of Water from Orifices.—A tank being emptied through an orifice near its bottom, the volume of water

Digitized by Google

passing per second is the product of water velocity (v) and orifice area (A). Neglecting resistances,

Theoretical discharge in cub. ft. per sec. $Q = Av = 8A\sqrt{H}$

But on account of resistances v is less than $8\sqrt{H}$ in practice, so, introducing a *coefficient of velocity* $\bar{c}$ (about ·97),

$$v = 8\bar{c}\sqrt{H} \quad \ldots\ldots\ldots\ldots\ldots\ldots\ldots\ldots\ldots\ldots \quad (1)$$

Or, suppose the reduced velocity has been caused by a loss of head H_r, a *coefficient of resistance* ρ (about ·0628) may be adopted, and H_r is measured in terms of the remaining head H_1.

Let $H_r = \rho H_1$.

Then $H = H_1 + H_r = H_1 + \rho H_1 = (1 + \rho) H_1$

$$\text{And, } v = 8\sqrt{H_1} = 8\sqrt{\frac{H}{1+\rho}} \quad \ldots\ldots\ldots\ldots\ldots\ldots \quad (2)$$

Equating the two values, (1) and (2):—

$$\bar{c}\sqrt{H} = \sqrt{\frac{H}{1+\rho}}$$

$$\text{and } \bar{c} = \sqrt{\frac{1}{1+\rho}} \qquad \therefore \rho = \frac{1}{\bar{c}^2} - 1$$

The above losses all occur *within* the vessel and orifice: a further loss is caused on account of the diminution of jet area by contraction, at a distance beyond the orifice of half the jet diameter. Taking the *coefficient of contraction* κ (about ·64), let real area = κA: then,

Actual discharge in cub. ft. per sec. $Q_a = \bar{c}v \times \kappa A$

$$= \underline{8\bar{c}\,\kappa A\sqrt{H}}$$

Or, from (2) $$= \underline{8\sqrt{\frac{H}{1+\rho}}\,\kappa A}$$

For simplicity one multiplier may be adopted, the *coefficient of discharge* C, equal to $\bar{c} \times \kappa$ (about ·97 × ·64 = ·62), and then

$$Q_a = 8AC\sqrt{H}$$

All the coefficients are determined experimentally, $\bar{c}$ by measuring the parabolic form of the jet, κ by set screws as at A

Digitized by Google

(Fig. 698), and C by gauging actual discharge. Fig. 698 shows at A a sharp-edged, at B a re-entrant, at C a cylindrical and external, and at E a bell-mouthed orifice. At B the contraction

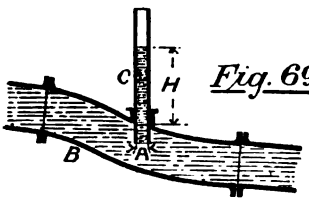

Fig. 693.

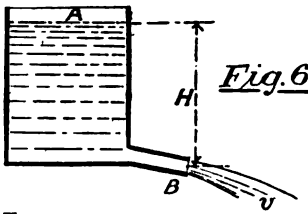

Fig. 694.

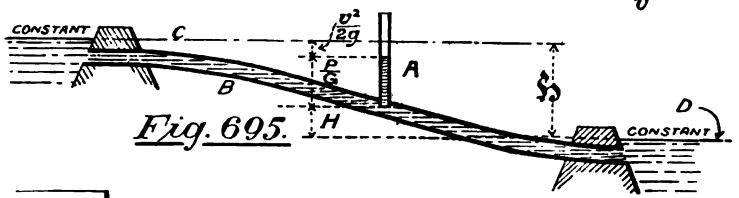

Fig. 695.

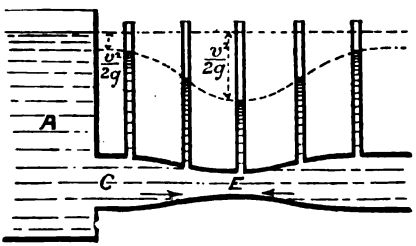

Fig. 696.

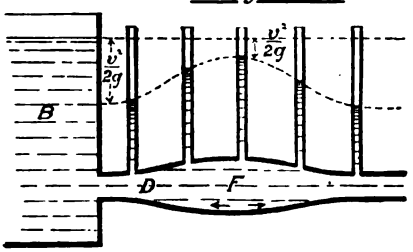

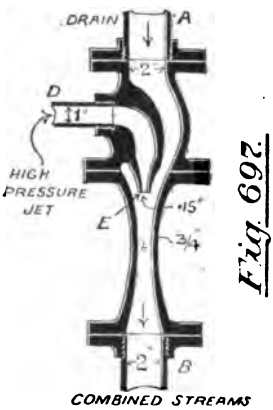

Fig. 697.

Jet Pump

is greatest by reason of the abrupt deviation of the stream lines; at C there is contraction *within* the orifice; and at E no free contraction, so that there C = $\bar{c}$.

Digitized by Google

TABLE OF COEFFICIENTS (average value).

Orifice is	Sharp-edged.	Re-entrant.	Cylindrical.	Bell-mouthed.
c	·97	1	·82	·99
p	·0628	0	·5	·02
κ	·64	·53	1	1
C	·62	·53	·82	·99

Measurement of Stream Horse-Power by Gauge Notches.—Let a stream be partly dammed, the water flowing through the *rectangular notch*, *a b c d*, Fig. 699. To find the discharge, divide H into very small portions h, and treat every small rectangle as a separate orifice, whose area will, when h is infinitely small, be shown by B. At any depth H_1, $v = 8\sqrt{H_1}$, and discharge through small rectangle $= 8\ B\sqrt{H_1}$. Showing the various discharges by horizontal lines on base *e f*, the figure is a parabola (the lines $\propto \sqrt{H_1}$), whose base is $8\ B\sqrt{H}$. Then

Theoretical Discharge through whole notch, in cub. ft. per sec. $\Big\}\ Q = \text{area of parabola} = \frac{2}{3}\ 8\ B\sqrt{H} \times H = 5\frac{1}{3}\ H\ B\sqrt{H}$

Actual discharge $Q_a = 5\frac{1}{3}\ C\ H\ B\sqrt{H}$

where C, the co-efficient of discharge

$= ·57 + \{\text{breadth of notch} \div (10 \times \text{breadth of weir})\}$

Prof. James Thomson adopted the *triangular notch* A, where B/H is constant throughout, suspecting that C would be thereby regular; and he found that $Q \propto H^{\frac{5}{2}}$. Taking an apex angle of 90°,

$$Q_a \text{ per sec.} = 2·54\ C\sqrt{H^5}$$

where C = ·617. Finally, for *any* notch,

Horse Power of Stream $\Big\} = \dfrac{\text{foot pounds per sec.} \times 60}{33{,}000} = \dfrac{Q\ G}{550} \times \Big\{\begin{matrix}\text{available}\\ \text{height of}\\ \text{fall in}\\ \text{feet.}\end{matrix}\Big\}$

Digitized by Google

The stream velocity is found by a current meter, and the head H by a stake, placed in still water above the notch.

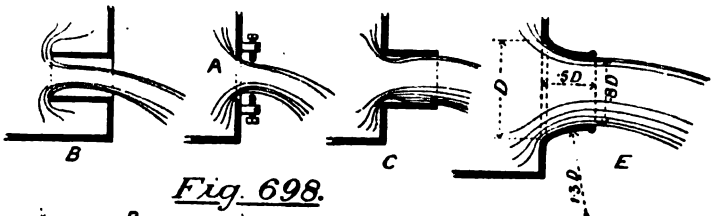

Fig. 698.

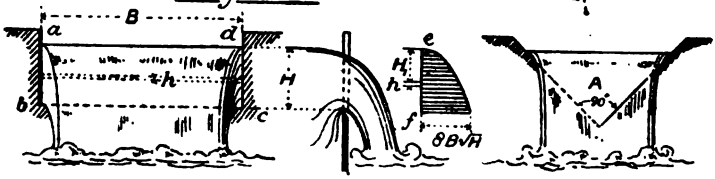

Fig. 699

Fluid Friction. — The general laws, p. 557, state that $F_n \propto v^2$, and is independent of pressure, but depends directly on the wetted surface. Measuring the surface area A in square feet,

$$F_n = \mu A v^2$$

at moderate speeds, where μ = ·004 for clean varnished surfaces, and ·009 for a medium sand-paper texture (Froude).

Friction in Pipes is principally due to surface or *skin* friction, viscous resistance being extremely slight. Assuming $G = 2g$ approximately, and placing these values so as to cancel,

$$\text{Total } F_n = \mu GA \frac{v^2}{2g}$$

Supposing, now, a piece of water of length L and diameter D of the pipe, is being pushed through the latter at velocity v:

$$\left.\begin{matrix} F_n \text{ per sq. ft. of} \\ \text{sectional area} \end{matrix}\right\} = \mu G \frac{\pi DL}{\pi D^2 \div 4} \cdot \frac{v^2}{2g} = G \frac{4\mu L}{D} \cdot \frac{v^2}{2g}$$

$$\text{As } H = \frac{\text{Press. per sq. ft.}}{G}, \text{ we divide by G, and obtain}$$

$$\text{Head lost in friction} = 4\mu \frac{L}{D} \cdot \frac{v^2}{2g} \quad (\textit{See Appendix III.})$$

Digitized by Google

Experiments on pipes give $\mu = \cdot 0075$; and it is more correct, when calculating, to take L a few feet at a time.

Virtual Slope.—Water being discharged from reservoir A, Fig. 700, by pipe B C, with a constant velocity energy, the nett head may be shown at any place by pressure gauges, D, E, F, and G; and in any particular gauge F there is evidence of a loss H due to friction. This varying as L, a straight line J G bounds the the water columns, and is called the *line of virtual slope* or *hydraulic gradient*. Suppose the pipe be laid along B K, pressure head would be constant, which is as though the pipe were level, but frictionless; but however B G be laid, J G is inalterable, only deviating with change in pipe diameter. After crossing the line at G, the pressure within the pipe is less than atmospheric, and the water tends to separate, the tendency becoming a certainty at C.

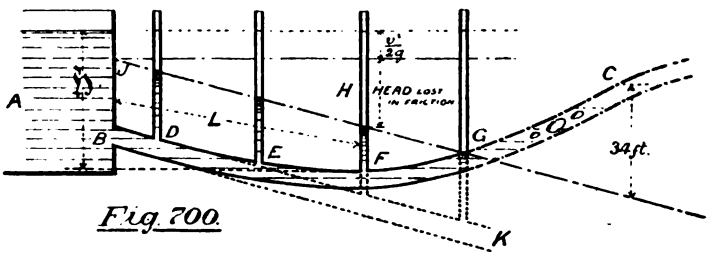

Fig. 700.

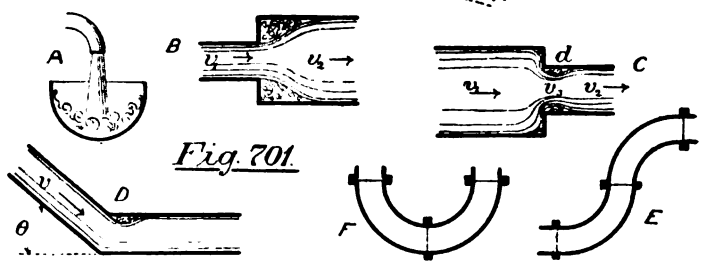

Fig. 701.

Loss by Eddies and Shock.—Water poured into a basin, as at A, Fig. 701, delivers all its energy as shock; but wherever a sudden change of velocity occurs, eddies are formed which absorb energy. Pipe B, suddenly enlarging, decreases the water velocity,

Digitized by Google

forming eddies at the corners, and the relative velocity being $v_1 - v_2$,

$$\text{Loss in foot pounds per second} = \frac{w(v_1 - v_2)^2}{2g}$$

where w = weight of water passing per second.

$$\text{Loss of head} = \frac{(v_1 - v_2)^2}{2g}$$

At C the water velocity is increased, but the loss is about as before. There is a very small loss from contraction at *d*, but the loss by changing the velocity from v_3 to v_2 must be reckoned.

Any sudden deviation as at D causes loss of energy, probably by eddies. Adopting the formula,

$$\text{Loss of head} = \zeta \frac{v^2}{2g}$$

experimental values of the coefficient ζ may be inserted:

θ =	20°	40°	60°	80°	90°	100°	110°	120°	130°	140°
ζ =	·046	·139	·364	·74	·984	1·26	1·556	1·861	2·158	2·431

When possible, bends should continually deviate in the same direction: thus case E is worse than at F, for in the former there is full loss from both bends, while at F, though there is full loss from the first, there is very little from the second bend. With gradual curvature there is little loss besides skin friction.

Principle of Momentum.—At p. 473 it was stated that force causing momentum was equal to $\frac{w}{g} f$. In another form

$$Pt = \frac{wv}{g} \quad \text{Or,} \quad \frac{\text{Impulse exerted}}{\text{Momentum generated}} \quad \text{for } f = \frac{v}{t}$$

If t = one second, and w = *weight of water passing per second*, $\frac{wv}{g}$ = change of momentum, and $P = \frac{wv}{g}$ = change of momentum, a formula we shall now apply to the pressure on wheel vanes.

Case I.—To find the pressure due to a water jet on a fixed plate A, Fig. 702. Measuring v in jet direction, it = 0 at the plate. Then,

$$\text{Pressure on plate} = \text{change of momentum} = \frac{wv}{g} = \frac{(GAv)v}{g}$$

Digitized by Google

Case II.—Let the plate move in the direction of the jet, as at B. Weight of water passing per sec. $= GA(v_1 - v_2)$.

$$\left.\begin{matrix}\text{Pressure on}\\ \text{plate}\end{matrix}\right\} = \left\{\begin{matrix}\text{Momentum before}\\ \text{impact}\end{matrix}\right\} - \left\{\begin{matrix}\text{Momentum after}\\ \text{impact}\end{matrix}\right\}$$

$$P = \frac{GA(v_1 - v_2)v_1}{g} - \frac{GA(v_1 - v_2)v_2}{g} = \frac{GA(v_1 - v_2)^2}{g}$$

Case III.—The reaction wheel C is only different from the last case in that the plate pushes the water and the plate pressure is caused by reaction. Ships driven by water reaction, as was the *Waterwitch*, are also similarly calculated, and the best conditions occur when $v_2 = \frac{1}{2} v_1$.

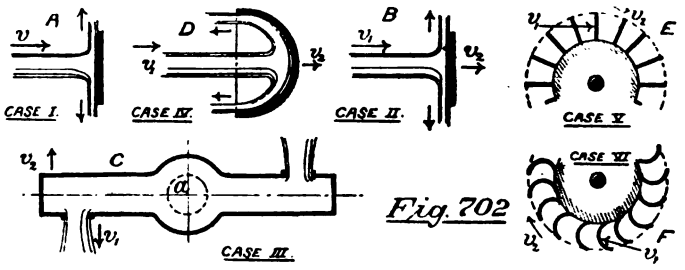

Fig. 702

Case IV.—A moving hemispherical cup. Relative velocity of jet and float when meeting is $v_1 - v_2$ (forward), and when leaving is $v_1 - v_2$ (backward); so absolute discharge velocity is cup velocity minus relative backward velocity $= v_2 - (v_1 - v_2)$.

Absolute velocity of jet before impact $= v_1$

" " " after " $= v_2 - (v_1 - v_2) = 2v_2 - v_1$

Weight of water per second $= GA(v_1 - v_2)$

$\therefore$ P = difference of momentum

$$= \frac{GA(v_1 - v_2)v_1}{g} - \frac{GA(v_1 - v_2)(2v_2 - v_1)}{g} = 2\frac{G}{g}A(v_1 - v_2)^2$$

If $v_2 = \frac{1}{2} v_1$, absolute velocity of rejection is zero, and all the jet energy is expended on the cups.

Digitized by Google

Case V.—The wheel E has a large number of vanes such as B. Then a plane is constantly before the jet, and relative velocity is v_1.

$$\text{Weight of water per sec.} = GAv_1$$

$$\text{Momentum before impact} = \frac{(GAv_1)v_1}{g}$$

$$\text{Momentum after impact} = \frac{(GAv_1)v_2}{g}$$

$$\therefore P = \text{difference} = \frac{GAv_1(v_1 - v_2)}{g}$$

giving the general rule: *pressure on radial floats of water wheel = weight of water per sec.* $\times \frac{(v_1 - v_2)}{g}$

Case VI. (F, Fig. 702), is a similar modification of Case IV. Relative velocity before impact = v_1, and

$$\text{Weight of water per sec.} = GAv_1$$

$$\text{Momentum before impact} = \frac{GAv_1^2}{g}$$

$$\text{Momentum after impact} = \frac{GAv_1(2v_2 - v_1)}{g}$$

$$\therefore P = \frac{GAv_1(v_1 - 2v_2 + v)}{g} = \frac{2GAv_1(v_1 - v_2)}{g}$$

giving twice the advantage of a flat plate.

Best form of Vane.—A B, Fig. 703, is the float of an undershot water wheel, receiving the impact of a thin stream D.

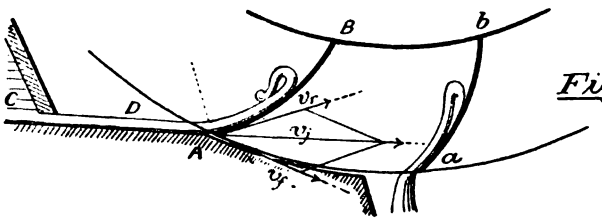

Fig. 703

Drawing v_j the velocity of water jet, and v_f that of the float tangentially, the completion of the parallelogram gives v_r the relative velocity, in magnitude and direction, to which the float

Digitized by Google

should be made tangential. This form of vane is due to Poncelet, and the action is essentially as at F, Fig. 702.

Water Wheels—the earliest forms of water motor—consist of (1) those rotated by water falling down the rim, known as *weight machines;* (2) those actuated by water impact on their lower floats, and called *impulse machines.* Overshot and breast wheels belong to the former, and undershot wheels to the latter class.

The Overshot Wheel, Fig. 704, is suitable for falls of 10 ft. to 70 ft., with a discharge of 3 to 25 cub. ft. per sec. A is the supply, B the tail race, and C the regulating sluice. Fairbairn improved this motor by driving, from teeth upon the rim, a pinion D so placed as to receive nearly all the weight of the driving water. Previously all the power had been transmitted through the axle. The efficiency of the machine is about ·75. Taking Q as discharge per second,

$$\text{H. P.} = \frac{GQH \times 60}{33{,}000}\,\eta$$

and the water velocity will be slightly greater than that of wheel rim.

The Breast Wheel, Fig. 705, is there shown in its greatly improved state, as due to Fairbairn. The breast A B, lying within $\frac{1}{2}''$ of the wheel, keeps the water in the buckets through a greater length of rim than in the overshot wheel, permitting its escape into the tail race with but little velocity. The regulating sluice is adjusted by a governor, and the penstock C is provided with guide blades to direct the motion of the entering water. The buckets are 'ventilated,' that is, are partly open to the wheel interior, thus permitting air to pass out or in whenever the water enters or leaves respectively.

The Governor, Fig. 706, is of the Watt type, but the movements of the sleeve A merely direct instead of actually cause the movements of the sluice. Spindle B, hollow in its lower portion, carries loosely the mitre wheels C and D, each gearing with wheel E on the sluice shaft. When the balls rise, sleeve A lifts by rod H the clutch F; and C being thus put in gear, the shaft G is rotated to close the sluice. If, conversely, speed

Digitized by Google

decreases, the balls fall and put D in gear, thus turning G oppositely, and partly opening the sluice. The governor is driven from the water-wheel by a belt.

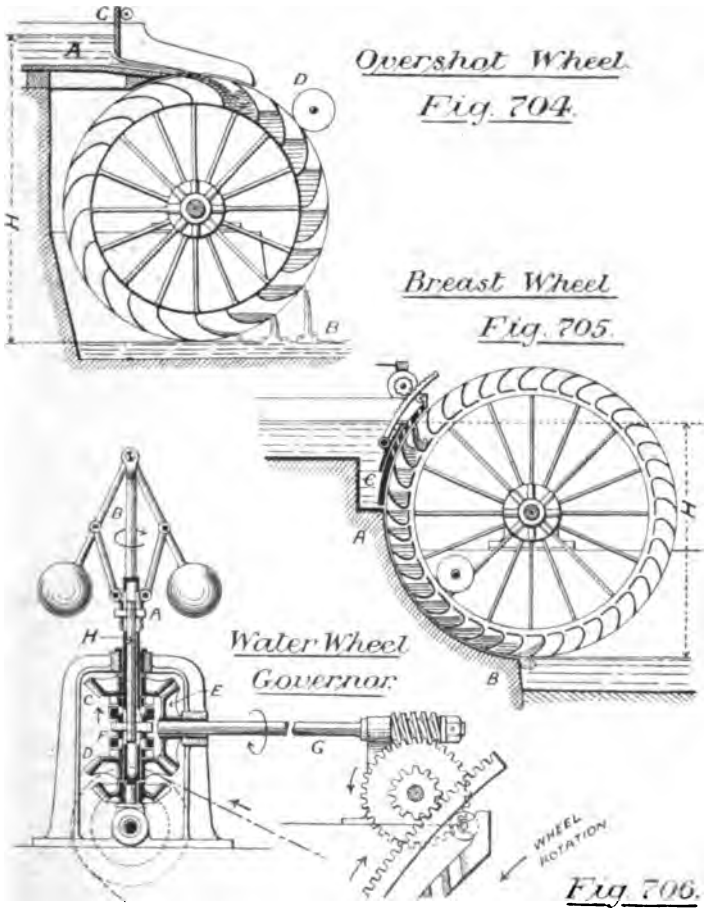

The Undershot Wheel is shown in Fig. 707. The form of float has been drawn at Fig. 703, and there only remains to add that, with Poncelet's improvements in floats and race, the water

Digitized by Google

leaves the wheel with little absolute velocity, and the efficiency is about ·66, a great improvement over that of the old radial-float wheel, which was only ·3. As the water never fills the vanes, there is no pressure, but pure impulse only, and the efficiency is therefore constant under varying sluices. Horse-power may be reckoned from head or velocity (*see pp.* 719 and 720). The circumferential velocity is about ·55 of that due to head, and the jet thickness is about 8 or 10 ins. The wheel is suitable for falls up to 6 feet, and the diameter may be four times the fall.

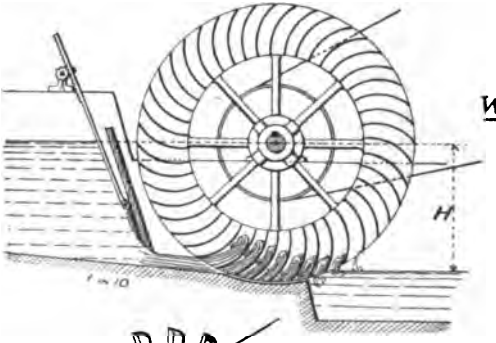

Undershot Water Wheel

Fig. 707.

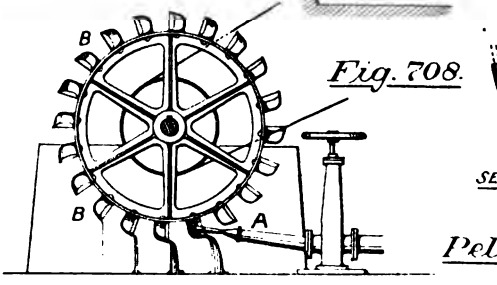

Fig. 708.

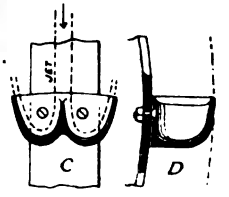

SECTION OF CUP

Pelton Wheel.

The Pelton Wheel, Fig. 708, is an American machine, in which a small jet issues from a nozzle A, with great head, and impinges on a series of cups B B, of the form of a split semicircle in end elevation C, and simply cup-form in side elevation D. In this way the jet, about $\frac{3}{8}$" diameter, is split, and returned without serious shock. In one example 320 H. P. was given off from a fall of 523 ft., the nozzles being one inch diameter. The efficiency is commonly ·8, but may reach ·9.

Digitized by Google

Turbines, formerly including only horizontal types, is the term now applied to all water wheels in which a relative movement of the water to the wheel causes reaction. The Reaction wheel, Fig. 709, is the earliest form, being a turbine without guide blades. The casing A, or wheel proper, has tangential nozzles BBB, through which the water leaves, entering at C; its reaction on A thereby producing motion. If the best velocity, that due to head, be employed, an efficiency of ·6 is attainable; but otherwise there is considerable waste of energy. This fact led to the introduction of guide blades and curved vanes, and the invention of the true turbine.

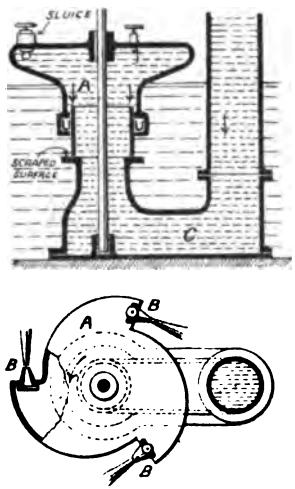

Reaction Wheel,
BARKER'S MILL, OR SCOTCH TURBINE
Fig. 709

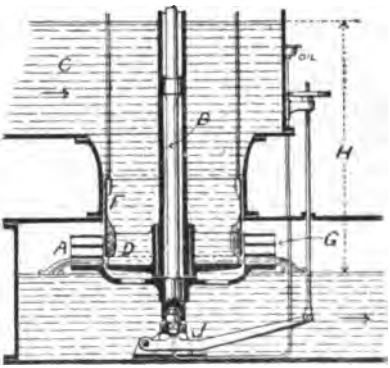

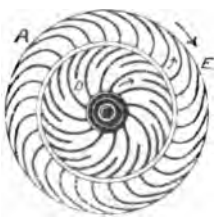

Fig. 710. *Fourneyron Turbine.*

The Fourneyron Turbine, Fig. 710, is an outward-flow and also a pressure turbine, the wheel passages being kept full. A, the wheel, is keyed to shaft B to transmit the power, and the water flowing downward from C is so deviated by fixed guide blades DD, that it enters the wheel nearly at a tangent. The wheel vanes are so curved that the flow is then changed to a radial direction, the

Digitized by Google

water leaving with little absolute tangential velocity, having given some 70 or 80 % of its energy to the wheel. Regulation by throttling always reducing the efficiency considerably, the wheel is divided by horizontal plates at G, so that in the drawing there are three separate turbines which can be shut off in succession by lowering the hollow cylinder F. Oil is supplied to the footstep J through a pipe, but immersed footsteps are now superseded. Horse-power may be found either by head or impulse formulæ.

The Jonval Turbine, like the Fourneyron, is a pressure turbine; but while the latter works best above tail water, the Jonval is always drowned or else connected to tail water by a 'suction' tube not more than 30 ft. high, and therefore full of water. Thus a certain head may be saved, which might be lost, through compulsory position of the turbine. Fig. 711 is a vertical section, where A is the wheel, B the guide blades, and C the shaft; and the water flowing parallel to the shaft gives the title 'parallel flow' to this class of turbine. Regulation, formerly effected by throttling, is now preferably obtained by closing a number of guide passages, preserving complete admission for the remainder. In the figure the guide passages form concentric semicircles G G in plan, and are so bent in elevation as to meet the wheel passages A A, which form a complete circle in plan. This arrangement provides retiring room for the sluices F F.

The Girard Turbine was introduced to provide against the loss of efficiency which always occurs when pressure turbines work with fractional supply. This fault being due to the attempted driving with a pressure for which they were not designed, Girard widened his wheel passages towards the outlet, and ventilated them so as never to entirely fill them with water. The energy is then purely due to velocity, and the turbine is an impulse machine; it has also a parallel flow and complete admission to whatever guide passages are open. In Fig. 712, A A are the guide blades and B the wheel. The latter is keyed to the hollow shaft P F, which, continued upward, joins the solid shaft G and transmits the power. The whole is hung on a pivot bearing J carried on the fixed pillar H, and the same arrangement appears in Fig. 711. The guide passages may be closed by vertical shutters K K, whose rods are coupled to rollers

Digitized by Google

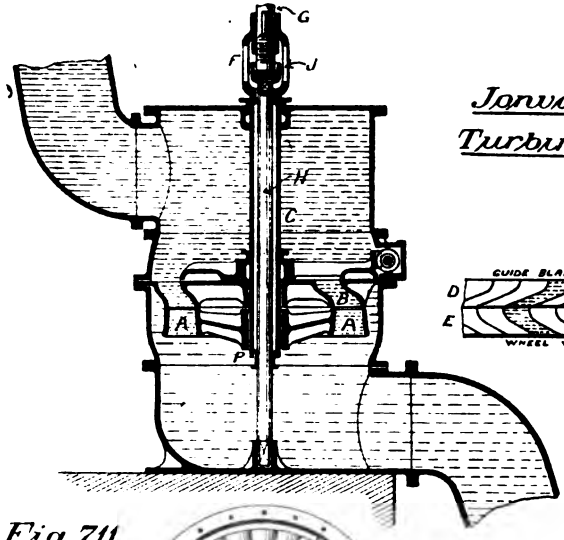

Jonval Turbine

Fig. 711.

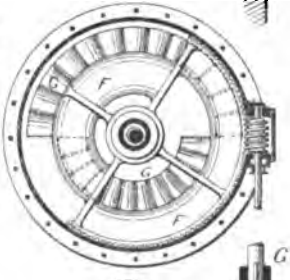

Girard Turbine.

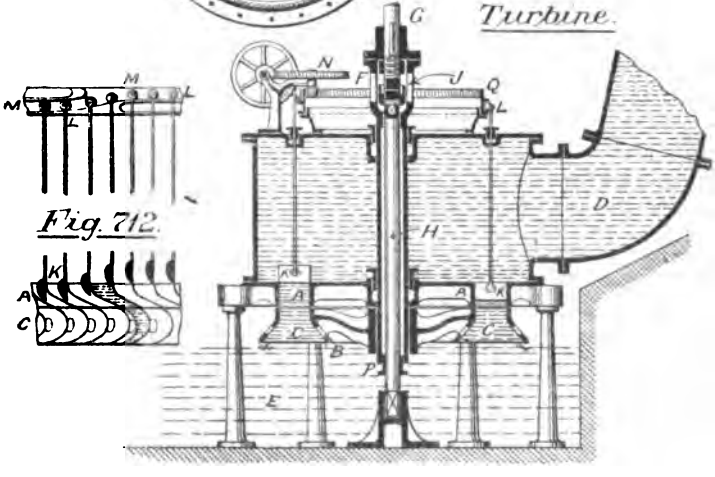

Fig. 712.

Digitized by Google

L L lying in the groove M M; and as the ring Q is revolved, by hand or governor, through gear N, the shutters are completely raised or lowered, according to direction of rotation.

In Fig. 713 the actual path of the water is shown in a Jonval turbine at A, and in a Girard turbine at B, $a\,b$ being free path and velocity due to guide blades, and $b\,c$ the wheel velocity; $a\,c$ is the relative velocity, and shows actual path in general direction. Making $c\,d = b\,c$, $a\,d$ will be the line of wheel vane causing curved water path $a\,c$, the horizontal ordinates of curvature on $a\,d$ and $a\,c$ being equal.

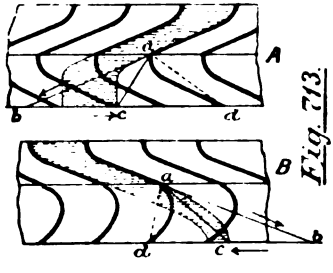

Fig. 713.

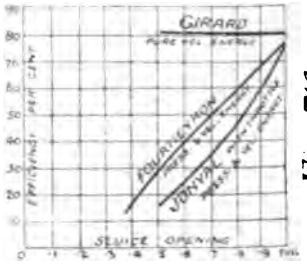

Fig. 714.

Fig. 714 is a diagram showing comparative efficiencies under varying openings. Although the Girard is usually less efficient than pressure turbines with full sluice, its efficiency is unimpaired by fractional opening.

Thomson's Turbine, Fig. 715.—Here the supply water A enters the rim of the wheel B, and escapes axially into C the tail race, so the machine is called an inward-flow turbine. Its energy is largely due to pressure, the outlet being either drowned or connected with a suction pipe. Referring to the plan, the guide blades D D are pivoted at E E, and can be moved in or out by the levers and links F F. Then the vertical shafts at F F are all connected, and rotated, through worm gear, by the hand wheel G; thus more or less water may be admitted to the wheel. Although the gear is complicated, its action is very perfect, the supply being regulated without materially affecting angle of blades or other conditions, and a nearly maximum efficiency of 75% obtained for all openings. The wheel is shown in detail at H.

Digitized by Google

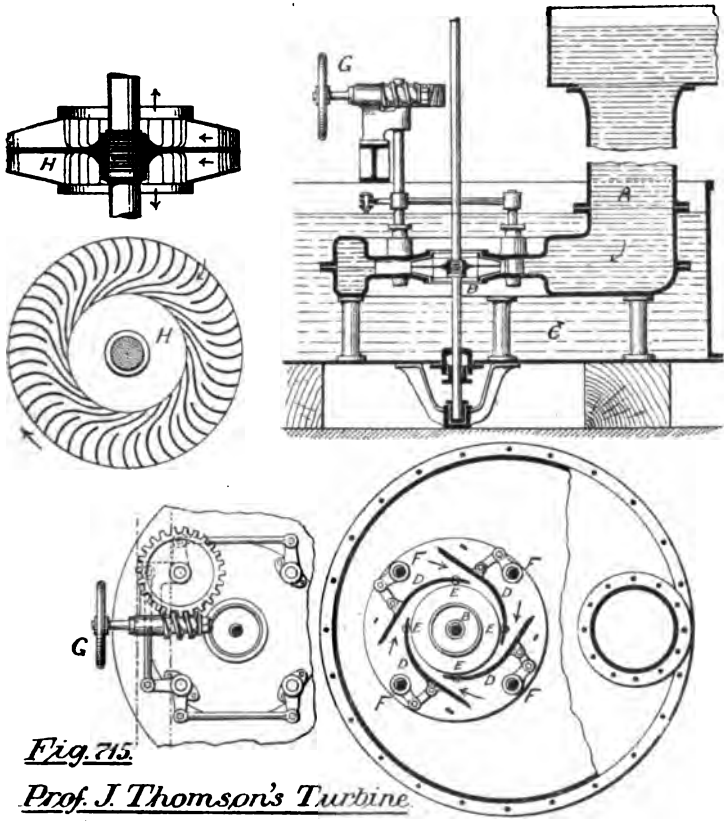

Fig. 715.

Prof. J. Thomson's Turbine.

Turbines may be finally classified as follows:—

Pressure or Reaction Turbines.	Impulse Turbines: or, Turbines of Free Deviation.
Wheel passages filled.	Wheel passages never filled.
Energy largely due to pressure.	Energy entirely due to velocity.
Discharge usually below tail water, or into suction pipe.	Discharge above tail water. No suction pipe.
Flow. Parallel or axial..... (Jonval). Outward..... (Fourneyron). Inward ..... (Thomson). Mixed, viz. inward and parallel (Schiele).	Parallel or axial..... .. (Girard).

Digitized by Google

As the water has no forward momentum on leaving the wheel, each pound suffers a change of momentum $\frac{v}{g}$, where v is the forward component of the entering velocity.

$$\therefore \text{ Forward pressure on wheel due to each pound of water per sec.} = \frac{v}{g}$$

Multiplying by v_1 the velocity of wheel rim: Useful work per lb. of water $= \frac{vv_1}{g}$ foot pounds per second. Now the energy given per pound of water is H foot pounds, of which η H is given to the wheel;

$$\therefore \eta H = \frac{vv_1}{g}$$

the fundamental equation for turbines. The object also of curving the guide blades is to give a large forward velocity to the water; and the wheel blades are so curved as to reduce that velocity to zero, thus giving all possible energy to the wheel.

The Centrifugal Pump is simply a reversed turbine, for, while water enters the wheel eye without whirl, it receives considerable tangential velocity by the time it reaches the wheel rim. The pressure thus given to the water being found from momentum, increase of head is obtained; then, from the previous paragraph, taking v = tangential component of water velocity when leaving, and v_1 the peripheral velocity of wheel

$$\frac{vv_1}{g}\eta = H$$

where η is about ·7. Fig. 716 gives the sections of a pump to lift 16 ft., with a pipe velocity of 7 ft. per sec. The water path from eye to circumference is that of a free vortex, the form being a logarithmic spiral, and the direction of wheel rotation is shown by the arrow. The casing B is a volute-shaped pipe of increasing diameter towards outlet, to accommodate itself to quantity of water passing, D D are hand holes, and cover E is removable so that the wheel may be withdrawn when required. F is a small 'whirlpool chamber' to let the change from velocity to pressure energy be made with little shock. In starting, sluice C is closed and air exhausted by a steam jet through ejector G, when water

Digitized by Google

rises; the sluice is then slowly opened while the shaft is being rotated, and pumping becomes continuous (scale of figure $\frac{1}{12}$).

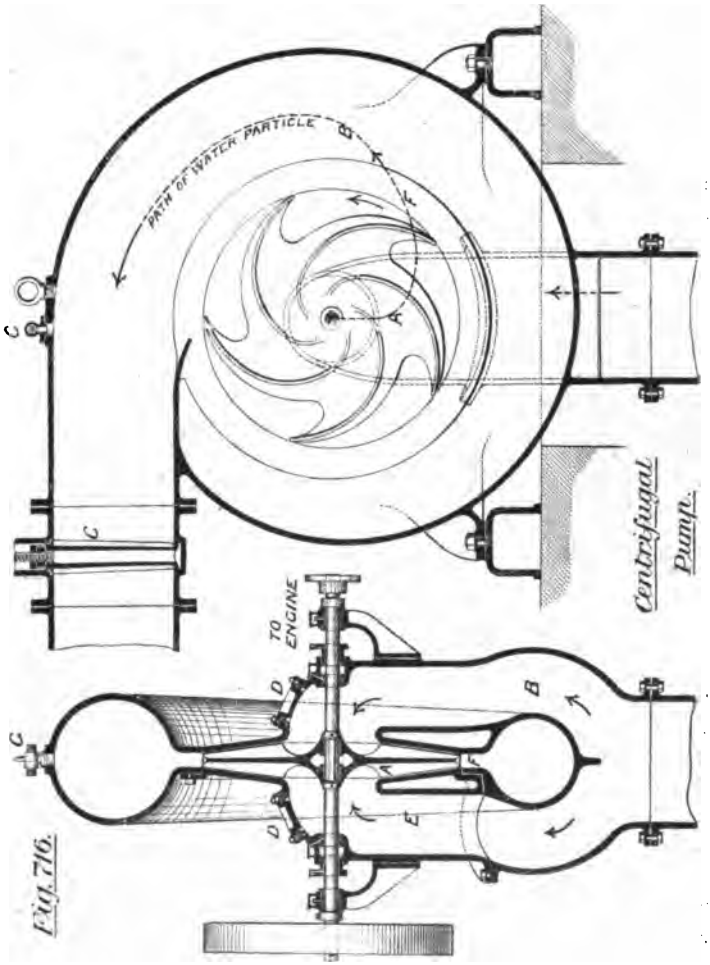

Fig. 716.

The Hydraulic Impulse Ram, invented by Montgolfier, enables a large flow of water with small head to lift a smaller quantity against greater head; and is commonly used to provide

Digitized by Google

water supply from a low stream to a house on a hill. In Fig. 717 valve A is slightly heavier than the static pressure of the stream water, which enables the latter to pass through and acquire velocity. This rush closes A and the impact is received on B, which opens, allowing a portion of the liquid to pass. The water at C again endeavouring to come to rest, A opens, and the action is repeated. The air vessel D promotes steadiness of flow.

Piston Pumps.—The *Suction* or *Lifting Pump*, Fig. 718, is placed at not more than 30 ft. above supply water. Piston A carries a delivery valve, and C is a suction or foot valve, both opening upward. Then the machine is at first an air pump

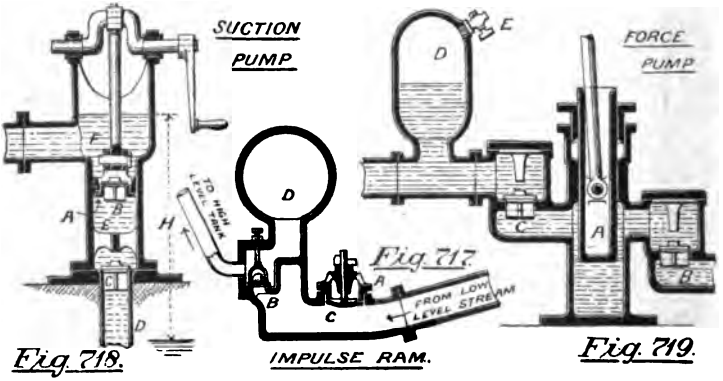

Fig. 718. Fig. 717. Fig. 719.

procuring a partial vacuum within E, which at once fills with water from D. When high enough, water is simply lifted from E to F, and flows away. The resistance to upward motion is due to a column of water of height H, and base equal to piston area.

The *Force Pump*, Fig. 719, is adopted for greater heads, only a small portion of the work depending on vacuum formation. When plunger A is raised, water enters through the suction valve B, and on A's descent this water is forced through the delivery valve C, the head depending on pressure exerted. Air in the vessel D is compressed during delivery, and acts as a spring to continue the flow, while the plunger is occupied on the suction stroke. Cock E is used to re-charge with air when the latter is absorbed by the water. A *double-acting force pump* has one delivery and

Digitized by Google

one suction valve to each end of the cylinder,* and the plunger becomes a piston.

All the preceding may be driven by steam power. The oldest steam pump yet in use is the Cornish engine A, Fig. 726. Its pumps are of the lift type, arranged in relays with less than 30 ft. between each pair, and the water is lifted from tank to tank till it reaches the surface. Two forms of 'donkey pump' are also shown at 4, Fig. 447, and 1, Fig. 448, pp. 486 and 488, where the engine valves are operated from a crank shaft. There is, however, another class of pump which dispenses with the crank, being therefore called 'direct-acting,' and probably the best of this class are those that necessarily work in pairs, being termed 'duplex.'

The *Worthington Pump* is a duplex steam pump, its ordinary form being shown in Figs. 720 and 720*a*. Two steam cylinders side by side at A, have pistons connected directly to two pump plungers at B. When a D valve is employed for an engine working without expansion, the valve and piston strokes cross mutually at half phase, and the piston cannot then directly actuate the valve. In this pump, piston No. 1 works valve No. 2, and piston No. 2 moves valve No. 1, by lever gear, the motion of the two pistons being alternate; thus, levers L and M rock valve-levers *l* and *m* respectively. The valves and pistons are, however, so interdependent, that immediately steam enters either cylinder, the action of the engine commences as a whole, and will continue unless special friction difficulties intervene. To enable each piston stroke to be completed before the valve reopens to steam, the exhaust ports C C are separate from the steam ports D D; a quantity of steam is thus also imprisoned as a cushion. In the pump, E E_1 are the suction, and F F_1 the respective delivery valves, small and numerous, to give sufficient area while diminishing the closing blow. The arrangement, also, enables the pump to both draw and deliver at every stroke, and the contrivance is double-acting; in addition, the air vessel J equalises the flow, and the water leaves at K.

The expansive use of steam has been provided for in the Worthington *high-duty* engine, Fig. 721. The engines are a pair of tandem-compounds, where A is the high-pressure, and B the

* Except in the case of the accumulator pump, Fig. 722.

Digitized by Google

low-pressure cylinder; and each engine works its neighbour's valves. Thus the lever C of the opposite engine moves the rods D and T, from which a system of link work connects to Corliss valves, the fulcra above and below the cylinders being used respectively for the exhaust valves F F, and steam valves E E. After use in both cylinders, the steam exhausts into the condenser G, from which the water and vapour is withdrawn by the air pump H, and delivered into the hot-well S. The pump itself needs no description, but special attention must be drawn to the means by which the driving force is so equalised as to be nearly uniform when delivered to the plungers. Compensating cylinders L L, or 'pots,' rocking on pipe trunnions, contain water under a steady pressure of about 200 lbs. per sq. in., and have plungers pivoted to the pump rod. This pressure constitutes a resistance to the steam pressure during the first part, and an assistance during the second part of the stroke, much in the same manner as the inertia of the reciprocating parts, and the effect on the work diagram is shown at M. *a* and *b* are the indicator cards; *c* and *d* show the pressure exerted by the pot plungers, *c* assisting, and *d* opposing the steam pressure: *e* is the combined effective-pressure diagrams from both cylinders; and *f* is the resultant pressure on the pump-rod after adding *c* and deducting *d*. The pot pressure is kept sensibly constant by the intensifier N, whose larger piston P is under an air pressure of about 75 lbs. per sq. in. from the air vessel K, due to the water column; and the smaller area Q is exerted on the water in the pots. The arrangement constitutes a sort of governor, which controls the pump stroke, shortening it if a pipe happens to burst. To accurately adjust the pot pressure, some air is admitted under P by cock R, causing a pressure of about 35 lbs. per sq. in. These pumps are constructed by Messrs. Jas. Simpson & Co.

The Accumulator Pump, Fig. 722, is a double-acting pump, requiring but one suction and one delivery valve. On account of the great pressure to be resisted (750 lbs. per sq. in.), an air vessel is inadmissible. Referring to Fig. 663, in addition to Fig. 722, the piston A has twice the sectional area of rod B; so when A moves rightward, displacing the whole cylinder volume through delivery valve D, half returns into B, and *half goes to delivery pipe b*. A, returning leftward, draws a whole volume through suction

Digitized by Google

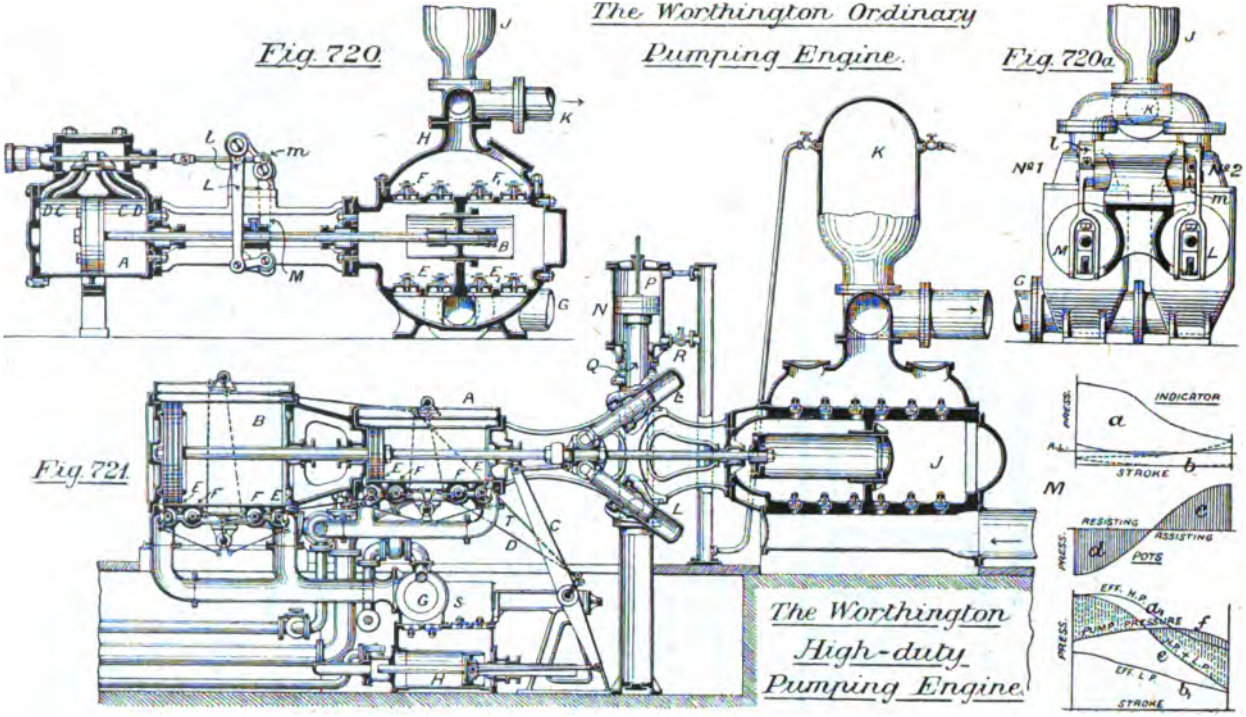

Digitized by Google

valve C, none passing D, while the volume in B, or *half, goes to delivery pipe:* thus there is constant delivery, though suction only occurs on alternate strokes. An additional non-return valve E permits each pump to be worked separately.

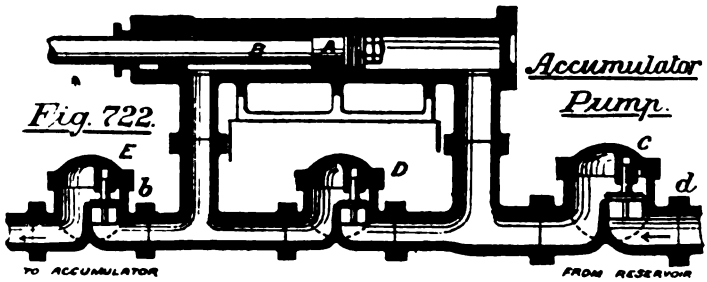

Accumulator Pump.

Fig. 722.

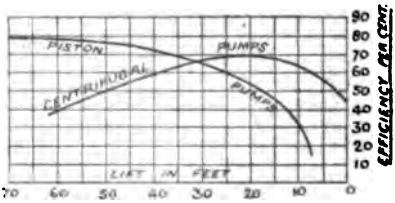

Comparison of Pump Efficiencies.

Fig. 723.

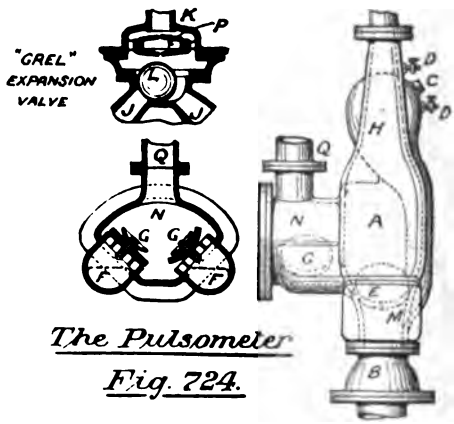

The Pulsometer

Fig. 724.

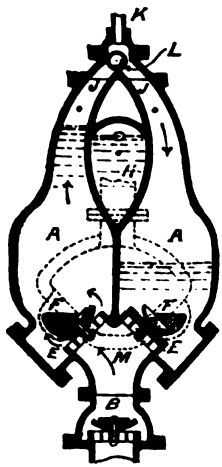

Pump Efficiencies.—At Fig. 723 is a diagrammatic statement of the efficiencies of both centrifugal and piston pumps under different heads, from which it will be seen that the former

Digitized by Google

are least efficient under large head, and the latter under low head. In consequence, centrifugal pumps are only employed for pumping large volumes of water under small head, while positive pumps are more suitable for pumping small volumes under great pressure.

The Pulsometer is a pump in which steam acts directly on the water without the intervention of a piston. It is naturally wasteful in working, but is simple and quickly applied on emergency. Referring to Fig. 724, there are two side chambers A A to receive the water alternately, and an intermediate vessel H, whose purpose will be explained. E E are suction and G G delivery valves, B a foot valve, N the delivery chamber, connected to A by short pipes F F, and Q the rising main or delivery pipe. To start the pump, the three vessels are filled through the hole C, the water resting on foot valve B. The ball L being compelled to lie on one or the other seat at J J, steam is admitted at K, and, entering, say, the right hand passage, displaces the water through F, *without agitation*, until the level falls to the upper edge of the orifice. Steam then blows through into F with some violence, and an *instantaneous condensation* occurs, causing a partial vacuum in A. The ball being now drawn to the right-hand seat, water rises into the right chamber ready for the next stroke, steam enters the left chamber, and the action is continuously repeated. The vessel H, though practically uncharged with air, serves the purpose of an air-vessel, assisting the steady flow into N by the small head of water which it provides; and to prevent the sudden shock caused by the rush of suction water, air-cocks D D are placed on the three vessels, and kept open to a very small amount. The 'Grel' valve at P is often applied to economise the steam supply. It is simply a short hollow piston, which rises and falls on account of the difference of pressure within and without it, thus closing the pipe K after a portion of the stroke has been completed.

The Hydraulic Press may be looked on as the seventh simple machine (see p. 480), and is the basis of the transmissive principle. Fig. 725 represents the press, with pump attached as used to compress cotton bales. The pump A draws water from the tank B, and forces it, under pressure, to the ram cylinder C, a rapid exhaust being obtained through the relief valve E when required. Let D = diameter of ram, and d that of the pump,

Digitized by Google

while the pump leverage is L : 1 ; from the principle of equal transmission, one pound per sq. inch on the pump plunger is one pound per sq. inch on the ram, and

Total Mechanical Advantage

$$= \text{Mech. Adv. of press and pump} \times \text{leverage}$$
$$= \frac{\text{area of press}}{\text{area of pump}} \times \frac{L}{1} = \frac{D^2 L}{d^2}$$

Neglecting friction. Taking pump efficiency $= \cdot 76$, and press efficiency $= \cdot 95$; both combined $= \cdot 76 \times \cdot 95 = \cdot 72$

$$\therefore W = P \times \frac{D^2 L}{d^2} \eta = \frac{\cdot 72\, D^2 L}{d^2}$$

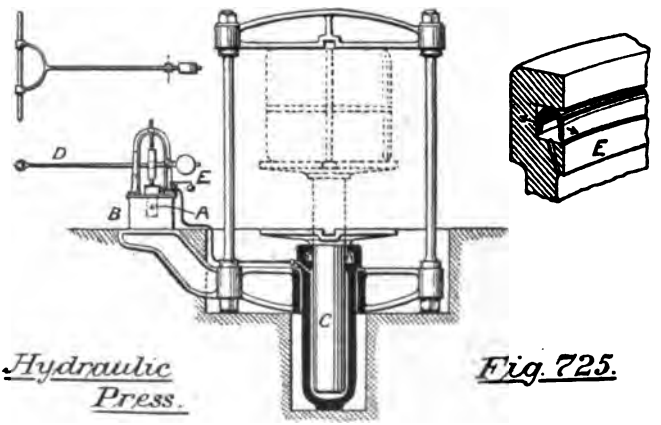

Hydraulic Press. *Fig. 725.*

The ram cylinder should be approximately hemispherical (see p. 68), and its strength is found at p. 399. The leather collar E is a most efficient packing, being distended by the pressure water and pressed against the ram surface. The hydraulic jack, p. 206, is simply a miniature press, where G is the ram and D the plunger. Its efficiency is, of course, much higher than that of other jacks.

The Hydraulic Accumulator is probably the most important adjunct in hydraulic transmission, constituting an artificial head, in which the water pressure is caused by other material than water. In Fig. 726, a series of weights at C hang from the

Digitized by Google

T-head E, and, through ram D, exert pressure on the water within A B. The weights being raised to position F, are a store of potential energy, which may be given out at will through the pipe B. Water is pumped in at A to raise the ram, by an engine such as that in Figs. 663–5, *p.* 682, and the latter is automatically stopped and started from the accumulator, as required, by the levers at G and H, struck by the load. The pressure water

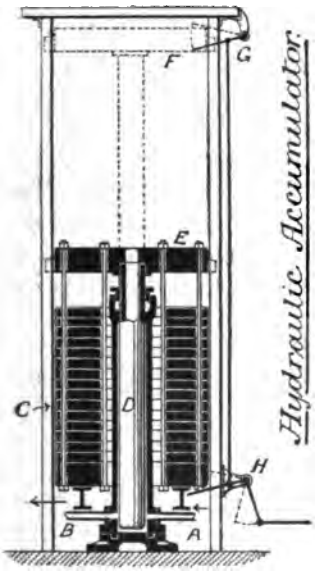

Fig. 726. Hydraulic Accumulator.

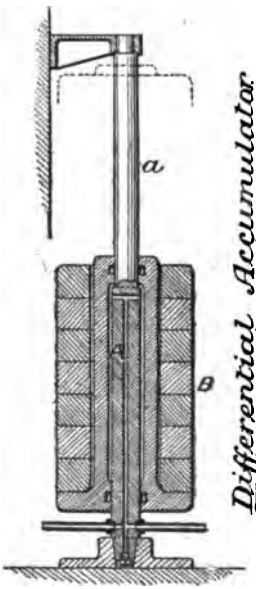

Fig. 727. Differential Accumulator (TWEDDELL'S)

drawn at B may now be applied to the driving of machines doing intermittent work, such as

1. Cranes upon dock wharves, &c.
2. Boiler-shop and shipyard tools.
3. Lifts for hotels, &c.
4. Swing and other movable bridges.
5. Manipulation of heavy guns.

In all these cases the pumping-engine will have sufficient time between shifts to catch up on the machines, and thus a com-

Digitized by Google

paratively small engine, working all the time, may serve for very heavy work occupying only a short period (see Case 4 especially). It is in the great storing capacity, and the little loss (skin friction being independent of pressure, and water incompressible) that hydraulic transmission is of such immense advantage. The usual large pressure, 750 lbs. per sq. in., is adopted because the friction is then much less in proportion to power transmitted, area of pipe being small. Chapter VII. illustrates hydraulic transmission applied to Case 2, and the student may now refer to pp. 292–3, 301–2, 314, 317, 320, and to Plates XV. and XVI., also to Case 12, p. 580.

Fig. 727 shows Mr. Tweddell's *Differential Accumulator*, where great pressure is obtained by considerably decreasing the ram area. B is the load, and the effective area of ram is A minus *a*. Comparing with Fig. 726, it must be understood that, weights being equal, we lose in time what we gain in pressure, and thus this apparatus is specially suitable for small machines, such as portable rivetters. The work stored in any accumulator is *the weight or load, in lbs.* × *the height lifted, in feet*, or

$$w\mathrm{H} \quad \text{foot pounds.}$$

A Hydraulic Lift, as devised by Mr. Ellington, and known as a 'balanced' lift, is shown in Fig. 728. A long ram A, working in a cylinder C, thereby lifts a cage B, and the load consists of (1) the cage, (2) the people or goods, and (3) the ram weight, the last two being variable. In the older and dangerous method the average load was balanced by a weight hung from a cord carried over a pulley, and connected to the top of the cage; but here the cage and people are lifted by separate water columns, while the varying ram weight is supported by a head which similarly varies. The variation in ram weight is due to the ram's varying immersion, the upward support from the water (apart from artificial pressure) being equal to the weight of fluid displaced. Referring to Fig. 728, the pressure from the main is led to the cylinders D and E. Upon piston F is a constant pressure, through L, supporting *weight of cage + ram when down*; and on piston G, through K, pressure water is admitted when required, supporting the *people + friction*, viz., the nett load. Both these pressures are used to intensify the water in M, which

Digitized by Google

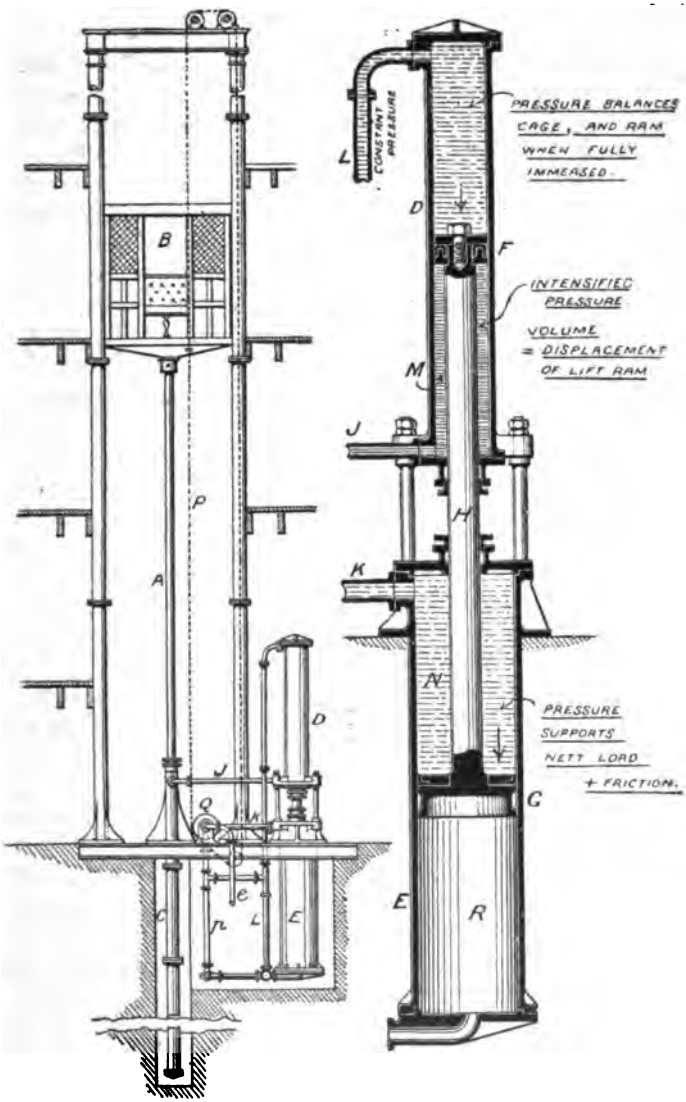

Ellington's Balanced Hydraulic Lift.

Fig. 728.

Digitized by Google

is directly connected to the ram, and on account of such intensification the ram diameter can be as small as we please, merely strong enough to prevent its bending. The volume in M being just sufficient to fill the ram cylinder during full stroke, the pistons F and G fall to the bottom of their cylinders, due not only to pressure from main, but to a constantly increasing *weight* of water. It is this weight, due to water, filling nearly the cylinders D and E, which, bearing on pistons F and G, so intensifies the pressure in M, as to support the whole unimmersed ram weight; being clearly a maximum when the cage is fully raised, and nothing when the cage is lowered to the bottom. The varying ram weight is, therefore, correctly balanced in all positions, and the only load to be averaged is that of the people. When lowering, water is exhausted from N, and the descent caused by the weight of the people.

The cord P, passing round a pulley on the working valve Q, will open the latter to pressure p, or exhaust e, in any position of cage. If the water in M decrease through leakage, the cage is lowered to the bottom, and water at N exhausted: then pressure water being admitted at R, the pistons are forced upward, compelling some water to pass from above to below piston F, through its packing; at other times R is empty.

Intensifiers, or intensifying accumulators, are a means of transforming small pressure, as from a town main, into a really useful hydraulic pressure. Recent descriptions will explain the principle, and a good example will be found at Fig. 333, p. 375.

Hydraulic Cranes have many advantages over others. Being worked intermittently, a small pumping engine will store the power: the latter, again, being used with considerable rapidity and saving of time, a consideration when loading vessels at wharves. The lifting, too, being done without vibration or noise, makes these cranes of special use in raising foundry boxes and other like work. The cranes are also very simple.

Fig. 729 shows a cylinder, ram, and pulleys, the essential apparatus for each motion of a hydraulic crane. Cylinder A has a common stuffing box C, packed with hemp, and carries a number of 'fixed' pulleys, $D_1 D_2 D_3$, the ram P supporting an equal number of 'movable' pulleys $E_1 E_2 E_3$. To prevent the ram turning on its axis, the head F slides on guides G G, and the

Digitized by Google

whole apparatus is fixed to the crane by feet J J. A wire rope or chain being attached to the eyebolt K, and carried round the pulleys $E_1 D_1 E_2 D_2 E_3$, leaves D_3, by W, to the load or slewing wheel, as desired. Examining by the pulley principle Fig. 439, p. 483, the mechanical advantage will be inversely as the number of cords or chains at L L, Fig. 729, P being now the *greater*, and W the *lesser* force. Neglecting friction,

$$\text{Mech. Adv.} = \frac{W}{P} = \frac{1}{\text{no. of cords}}$$

And allowing for all resistances,

$$W = \frac{P}{\text{no. of cords}} \times \eta$$

where efficiency η varies with the number of pulleys, by the following table, found from practice:

VALUES OF η FOR HYDRAULIC CRANES.

No. of Pulleys.	0	2	4	6	8	10	12	14	16
η =	·87	·8	·76	·72	·67	·63	·59	·54	·5

and the greater tension, at tail end, equals P ÷ (no. of cords × η).

Thus, a heavy pressure with slow speed has lifted a smaller load at greater speed, the distance between pulley centres having been *increased.*

In order that the ram shall finish its stroke quietly, automatic cut-off gear is supplied. Valve H being opened to pressure by raising rod N fully, the ram, ascending, strikes a tappet R by means of the projection Q, when the stroke is nearly complete, thus causing lever M to be pulled over to position S, and closing the valve. A further movement of M to position T opens H to exhaust, and the ram descends by the pull of the load.

Reference may now be made to Plates XV. and XVI., showing various hydraulic cranes. That on the left in Plate XV. is the best example of pulley gear. Thus, cylinder D is for lifting, E for traversing, and C for slewing, all worked from valves at S.

Digitized by Google

Working Valve.—When a D slide is used, Fig. 730 is the usual form, where P, R, and E are the passages from pressure, to ram, and to exhaust, respectively. At B the valve is open to pressure, and at A to exhaust, while at C the ram passage is entirely cut off, by hand or automatic gear.

Hydraulic-pressure Engines, though wasteful with small pressures and high speeds, may reasonably be used when supplied with water at 750 lbs. pressure or more, the piston speed being not more than 80 ft. per minute. The first piston engine, invented by Lord (then Mr.) Armstrong in 1838, was of the rotary type. Subsequently he adopted side-by-side cylinders with reciprocating pistons, and in the present engine, as applied to heavy work, such as turning ships' turrets or swing bridges, there are three oscillating cylinders, whose pistons connect to the same triple-throw crank shaft, and each valve is worked by a rocking lever on the trunnion. Fig. 731 is a section through one valve box. Valve A is reciprocated by the trunnion lever, while valve B, used for reversing purposes, may for the present be considered fixed. C is the pressure supply, D the exhaust pipe, and E F the connection to the cylinder. Taking present position of B, a right-hand movement of A admits pressure to E, and a leftward movement permits exhaust from E, through H and G, to D. Supposing, now, B's position be so changed that H is opposite D, and G opposite F; the conditions are reversed, and a leftward movement of A admits pressure to F, while a rightward movement exhausts through the valve to D. Thus B is a reversing valve, and is moved by the piston of an auxiliary cylinder.

The Relief Valve J is simply a small, spring-loaded safety valve, which permits an escape of water whenever the pressure exceeds the normal, by reason of water inertia. Such valves are placed wherever there is liability to shock.

The Brotherhood-Hastie hydraulic engine, Fig, 732, is a combination of the well-known Brotherhood engine, p. 632, with Hastie's automatic stroke adjustment. Pressure water entering at P, passes to the cylinder by pipe A, and the exhaust returns through the same pipe, but is diverted by valve D into the outlet E. If P and E are connected to a reversing valve, the pressure water may enter at E and leave at P, and the direction of engine rotation

Digitized by Google

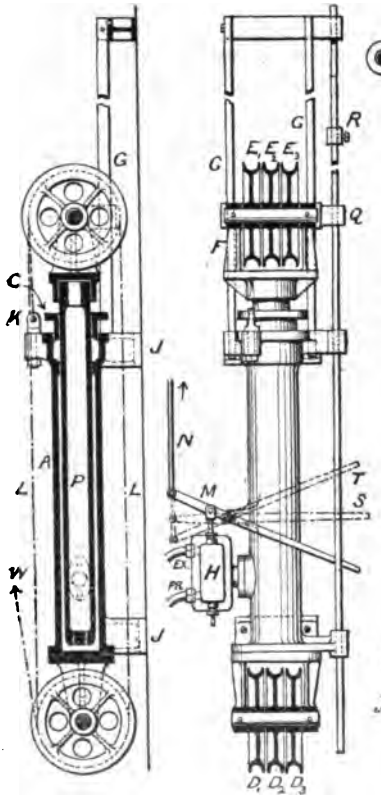

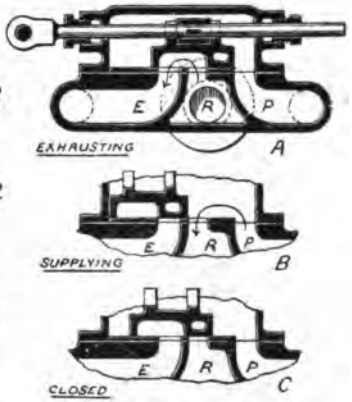

Working Valve.
Fig. 730.

Multiplying Gear
for Hydraulic Cranes.
Fig. 729.

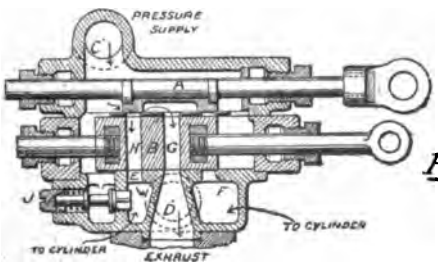

Fig. 731.

Armstrong's
Reversing Valve.

Digitized by Google

is then reversed. The principal feature in this engine is the crank pin B, which is not fixed, but capable of sliding to a limited amount, within a diametral groove in the crank plate C, being for this purpose screwed into a shoe plate M. The power given to C is transmitted by a hollow shaft Q, through the strong volute spring H, to the driving pulley U. Now U is keyed to the inner shaft K, and when the load comes on the pulley there is a further coiling of spring H, which causes shaft K to turn relatively to G,

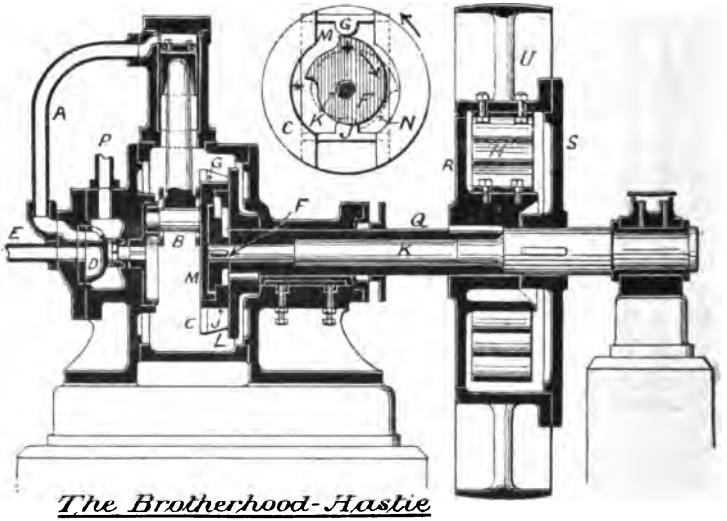

The Brotherhood-Hastie Hydraulic Engine *Fig. 732.*

through an angle depending on the turning moment. The result of K's turn is to rotate a cam F in such a way as to move the crank pin further from the shaft centre, and thus increase the throw; while on the other hand a decrease in load reverses the cam movement and enables the piston pressure to shorten the crank centres. Now there are two ways of accommodating fluid pressure to work required: alteration of stroke or of pressure. In the steam engine reduced work is met by reduced pressure; but water, being inexpansible, can only be adjusted in supply by a

Digitized by Google

corresponding adjustment of stroke. The result is roughly the same, for pressure × stroke = work done.

The cam F is peculiar in shape; it is shown under full load, having turned through three-quarters of a revolution, in a right-hand direction. Its highest point is at +, and its lowest at *, and when the load is removed, the cam turns leftward until the projection at * stops itself against the projection G. Similarly the cam shown dotted serves when the engine rotation is reversed, the projection J being then acted upon. Both G and J are one with the shoe-plate M, but lie in different planes, so that the two cams, also in one piece, may rotate without interference.

Digitized by Google

Digitized by Google

NOTES AND EXTENSIONS.

APPENDIX I.

(SECOND EDITION.)

CHAPTER I.

P. 37. **Brass and Gun-metal Founding.**—With these alloys a good height of pouring head is required, so as to cause pressure and prevent porosity in the casting. An ample number of risers should also be provided to permit escape of air or gas, and thus avoid honey-combing. No blackening is used, but the mould is faced with very fine sand.

P. 42. **Steel Casting.**—It having been noted that small castings were more porous than large ones, the conclusion was arrived at that it was of the utmost importance to keep the metal at a very great heat until poured. The present method of preventing blow-holes is to add silico-spiegel (a combination of silicon and pure cast iron) to the ladle while pouring, the better plan being to apply it in the molten condition. If this substance be not thoroughly mixed we get 'hard' and 'soft' spots in the casting, the former being due to accumulations of the silicon. In order to keep the casting uniformly hot until the whole mould be filled, the pouring gate should be chosen at the heaviest portion of the casting; and small castings are preferably poured from a small converter to themselves, instead of from the refuse of a large open-hearth melting. By facing the mould, where required, with ferro-manganese or ferro-chromium, very hard surfaces are obtained in those places, the latter substance giving the hardest result.

Digitized by Google

Chapter III.

P. 85. **Phosphor Bronze.**—The proportions by weight are as follows:—

For ordinary uses	Copper ...	85
	Tin ...	15
	Phosphorus	0·5
		100·5
Ditto	Copper ...	90
	Tin ...	9
	Phosphorus	·75
		99·75
Tough metal for piston rings and eccentric linings	Copper ...	93
	Phosphor-tin	7
		100
For bearings (heavy machinery)	Copper ...	85
	Phosphor-tin	15
		100

Chapter IV.

P. 102. **Welding.** — It has been shewn by Sir Thomas Wrightson that the phenomenon of welding is akin to that of *regelation*, or the sticking together of ice under pressure. To prove this an experiment was made which showed a distinct decrease in temperature (amounting to 106° F at 255o° F.) during welding, a similar result being known to take place during regelation. This abstraction of heat is caused by the melting of the iron or ice in either case, and the consequent need of latent heat for the liquefaction.

P. 124. **Case Hardening.**—If two pieces of iron, forming pin and socket respectively, are to be case-hardened, and a good *working fit* be finally required, it is important that the pin be made a pretty *tight fit* in the socket before hardening. After the

Digitized by Google

hardening process, both pieces will have swelled in volume, and it will be found that the pin will fit the socket more tightly than before. The final fit may be obtained by lapping the pin with emery powder in the lathe.

P. 128. **Hardening Steel.**—The difficulty experienced in hardening milling cutters without cracking is found to be largely due to unequal heating as well as unequal cooling. To avoid the former a method of heating in a bath of molten lead kept at a high temperature is found to be very successful. Regular cooling is very difficult to obtain in the case of thin articles, such as circular saws; but by placing a sheet of brown paper upon the surface of oil and allowing the article, placed upon the paper, to gradually sink into the liquid, warping may be largely prevented, though nothing softer than the equivalent of a brown colour can be thus obtained. If a saw is to be tempered to blue, the usual course of water tempering must be followed, dipping as smartly as possible, and the blade be straightened afterwards. Hardening in water and tempering subsequently in oil will produce a softer result than if water be used throughout.

Chapter V.

P. 152. **Lathe Centreing.**—By adopting a very slightly more acute apex angle for the centreing drill than for the lathe centre, the necessity for drilling the small hole, as mentioned at top of p. 152, is avoided. See Fig. 733.

Lathe Centre. Fig. 733.

P. 153. **Double Driving.**—By allowing both ends of the carrier to be driven from the catch plate, stress is taken off the lathe centre, and more steady tooling is produced. Clements' driver, Fig. 734, is designed to effect this purpose. The carrier c

Digitized by Google

is driven by both the pins D D on opposite sides of it, and these pins are not fastened directly to the catch plate A, but to a separate cross-shaped plate E. The pins B B, holding plate E to the plate A, pass through slots in E, so that the latter is permitted to adjust itself to inequalities in the contour of the carrier C.

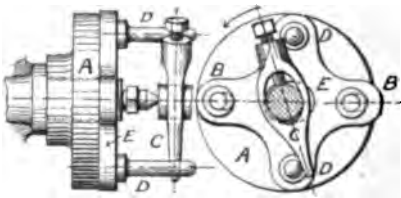

Clement's Double Driver Fig. 734.

P. 157. **Lathe Tools.**—A simple and excellent roughing tool for a lathe is shown in Fig. 735. A groove being fullered by the smith at a short distance from the tool point, the upper surface is ground to suit the tool angle in the direction shown by the oblique arrow, while the relief angle is obtained by grinding both at front and side as shown in the end view.

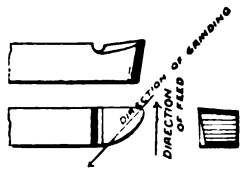

Lathe Roughing-Tool. Fig. 735.

Chapter VI.

P. 214. **Gauges.**—A very handy form of gauge is shown in Fig. 736. It combines in one tool the equivalent of *plug gauge* B and *ring gauge* A. It is not quite so perfect in its application as the cylindrical gauges, but will serve most ordinary purposes.

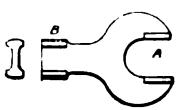

Horseshoe Gauge Fig. 736.

Digitized by Google

P. 230. **Turning Eccentric Sheave.**—Where much of this work is to be done, and where the eccentricity of the sheaves to be turned varies much, the mandrel shown at Fig. 737 is an ingenious and useful appliance. B is an expanding mandrel, having a cone A and four inclined keys D D that can be advanced outward or inward by the nut G, so as to grip the sheave firmly. The eccentricity may be adjusted by applying the handle H to the screw at B, and by unloosing and refastening the nut F. The whole is placed in the lathe by bolting the frame C to the face plate J, then advancing the poppet head to the centre F.

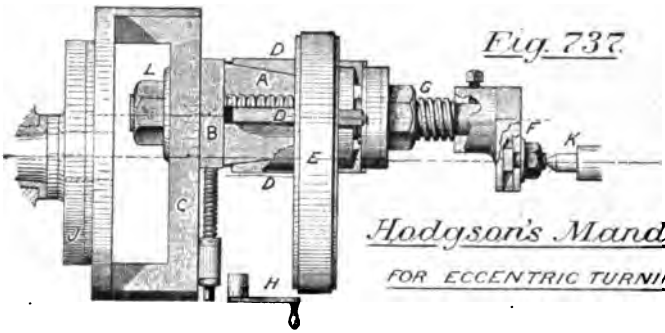

Fig. 737.

Hodgson's Mandrel

FOR ECCENTRIC TURNING

P. 232. **Boring Eccentric Straps.**—Instead of turning the straps in the lathe a heavy drilling machine may be conveniently adapted for boring purposes, as in Fig. 738. A large cutter C is placed horizontally through a slot in the boring bar E (or drilling machine spindle), and the radial feed may be obtained by giving a slight turn to the pinion D, which fits into teeth upon the cutter. B shows the eccentric straps, which are firmly bolted to the table A.

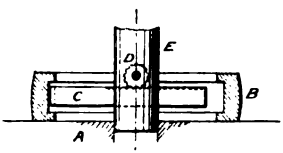

Fig. 738.

Boring Eccentric Straps.

P. 232. **Planing Eccentric Straps.**—The method shown at E_1, Fig. 245, may be varied by using a shaping machine and

Digitized by Google

fastening the work to the side of the table, as at E, Fig. 260, p. 251.

Pp. 235 and 243. **Machining Brasses.**—There are three methods of machining brasses for bearings and rods: (1) where the pair of brasses are cast in one, then bored, turned, and shaped, and finally cut through the middle with a parting tool; the space left by the tool is to be filled with a liner of the proper width. (2) The half brasses being cast separately are united with soft solder, and after tooling are separated by heating: here the mid surfaces must be first shaped. (3) Bolting together as described at p. 243.

P. 247. **Boring Crosshead.**—In case there should not be a bell-chuck large enough for the purpose shown in Fig. 254, the crosshead may be bolted to an angle plate placed on the face plate; but the setting is not quite so satisfactory.

P. 249. **Milling a Radius Link.**—The appliance shown in Fig. 739 is for the purpose of guiding the link under the milling tool in such a manner as to cause a slot to be milled having the correct curvature. A and B are two slides hinged at C, and laid as shown (plan view) upon the milling machine table. If these are now bolted down so as to enclose a very wide angle ACB, a large curve is the result, and if the angle be decreased, a smaller curve is traced on the link. EE are two dies having pins which carry the upper plate D, and on the latter the radius link is bolted in the position shown. The right-hand die can be advanced by the screw F, this advance being the feed, and a very little thought will show that the milling tool will cut out a curved slot whose radius will depend upon the angle ACB

Leeds' Link-milling Apparatus.

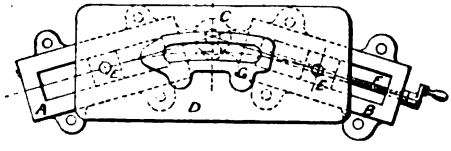

Fig. 739.

Digitized by Google

P. 256. **Turning Governor Balls.**—The method already described is adopted only where the special appliance shown in Fig. 740 is not readily obtainable. The slide D, with its tool holder, is known as a ball-rest. It is pivoted at C, directly under the centre of the ball to be turned, and is supported upon the saddle B. The tool being set to turn the ball of correct diameter, the necessary radial feed is given by hand. The feed is more regular if spur teeth be cast upon the curve E, into which a pinion on the rest engages. A horizontal hand wheel fits then on the pinion spindle.

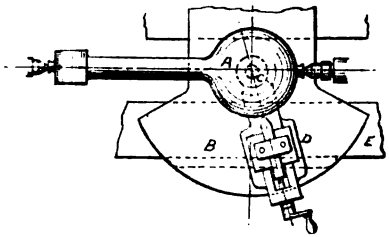

Ball Turning

Fig. 740.

P. 256. **Cutting Bevel-wheel Teeth.**—If not too small these wheels may be correctly cut by the machine in Fig. 741. The bars D D, carrying sliding tool boxes C C, are centred at A on a universal joint, and as the tools reciprocate a slow conical feed is obtained by guiding the bars round the plate on 'form' E, which is cut to twice the tooth scale and set at twice the distance from A.

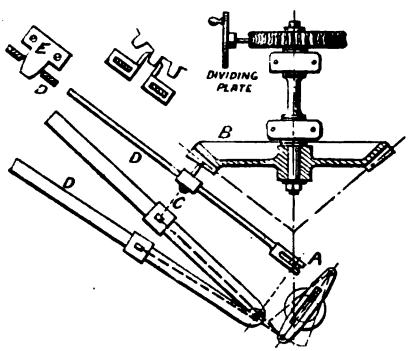

Fig. 741

Bevel-tooth cutting.

BY THE AID OF A FORM OR TEMPLATE

Digitized by Google

Cutting Key-ways in Wheel Bosses.—Usually the wheel is for this purpose laid horizontally on the table of a slotting machine, as in Fig. 742; and if taper be required, the boss is set at an inclination of 1 in 64 by packing at D. The clamps C and bolts D then hold the work securely. The cutting tool is sketched at F. It is now the custom in some shops to make the key-ways and keys perfectly parallel, but a very good fit with each other: a bursting pressure is thus avoided.

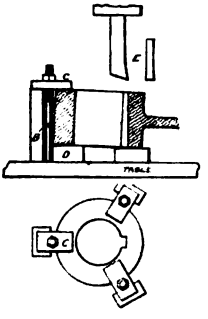

Cutting a Key-way,
IN THE SLOTTING MACHINE

Fig. 742.

CHAPTER VII.

P. 289. **Hydraulic *v.* Electrical Transmission.**—In the discussion on the President's address before the N.E. Coast Institution of Engineers and Shipbuilders, October 16th, 1894, Mr. Tweddell says: 'Any remarks on the economy due to hydraulic transmission apply with equal force to electrical transmission. As the laws affecting both systems are almost identical, the question resolves itself into a matter of suitability for certain tasks, and as hydraulic pressure is suitable for intermittent work or for rectilinear motions, and not so suitable for rotary motions, it follows that a *combination* of the two systems . . . . is exactly what is wanted.'

P. 328. **Electric Welding.**—An interesting paper was read before the same Institution on February 12th, 1895, by Mr. Henry Foster, in which he described the methods adopted at the Newburn steel works. The 'Benardos' process was used, in principle

Digitized by Google

as shown at p. 329, and the work to be welded consisted of general machinery repairs (especially for engine breakdowns) and boiler repairs. In addition the arc was used for boring holes in plates, or for otherwise melting portions of metal away. The process is of great advantage for breakdowns, as putting the machinery in working order in an extremely short space of time, and is also especially useful for patching purposes, thus saving many articles from the scrap heap. The average ratio of weld to solid was 85·5 per cent. for iron, and 80·8 for steel, found by testing. The best hand welds were found to be much below this.

Fusible Plugs made of gun-metal are screwed into the crown of boiler fire-boxes or furnaces. They are drilled through the centre and filled with a fusible metal whose composition depends on the temperature at which it is desired the steam shall blow out the fire when shortness of water occurs. The following table will show the composition required :—

Melting Temperature in degrees F.	Composition of Metal in parts by Weight.		
	Lead.	Tin.	Bismuth.
201	1	1	4
202	5	3	8
202	2	3	5
246	1	4	5
257	1	0	1
266	1	1	0
334	0	2	1
334	1	3	0
392	0	3	1

(*See also p.* 833.)

Chapter VIII.

P. 365–6. Nature of Shear Stress.

$$F_c \text{ or } F_t = F_s \div \sqrt{2}$$

Now these are *total* stresses acting on the following surfaces in Fig. 324 :—

F_c on $a\,d$, F_t on $c\,b$, F_s on $a\,c$.

Digitized by Google

and if $ac = 1$, ad and cb each $= \sqrt{2}$; that is, F_t acts on area $\sqrt{2}$, while F_s acts on area 1. It follows therefore that for unit stresses

$$f_c \text{ or } f_t = f_s$$

or, a shear stress produces two normal stresses, tensile and compressive respectively, each of an equal intensity with its own, and having directions at 45° to the original stress.

P. 385. **Influence of Time on the Stress-strain Diagram.**—The diagram in Fig. 743, taken by Professor Ewing,

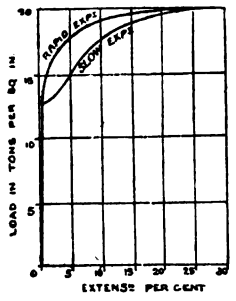

Influence of Time in Stress-strain Experiments.

Fig. 743.

shows very clearly the different plastic lines obtained, according to whether the test experiment be made very quickly or very slowly. It is clearly important that an average rate be maintained in applying the straining load.

P. 390. **Wöhler's Experiments.**—To give a further interest to Wöhler's important experiments, the three machines which he used are shown in Figs. 744, 745, and 746. In the first an axle is loaded by a spring at a considerable distance 'over-neck,' and is then rotated several millions of times before breaking, the case being that of alternate stresses. The second machine, Fig. 745, represents the bending of a beam. The load is again caused by a spring in tension, and the varying stress is obtained by the rotation of the lever B, placed below. This is the case of a live load (removed and replaced). The third drawing,

Digitized by Google

Fig. 746, shows a tension experiment. In every case A is the specimen, B the rotating shaft, and C the load spring.

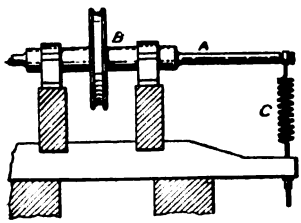

Fig. 744.

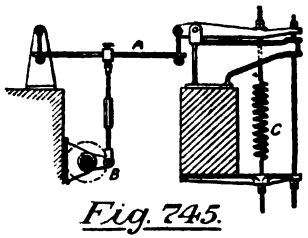

Fig. 745.

Wöhler's Experiments on Stress Repetition.

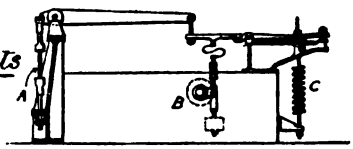

Fig. 746.

P. 399. **Thick Cylinders.** — The stresses within the material of a thick hollow cylinder are really somewhat complicated. They always consist of (1) a radial pressure, greatest at the inner circumference and decreasing to nothing at the outer circumference; and (2) a hoop tension, which is greatest at the inner ring and least at the outer ring, in the manner shown in Fig. 352. This diagram shows what the hoop stress would be in an initially unstrained cylinder.

Now, in order to show how changes in mechanical construction can decrease the hoop stress, and therefore *decrease the thickness of cylinder necessary*, we will put out of the question the radial compressive stress and the possible longitudinal tension, and consider only the *hoop stress* as tending to break the cylinder. Just as A B, Fig. 747, is the diagram of tensile hoop stress, C D is that for the fluid pressure, or *load*, and as A B = C D for conditions of strength.

$$pr = ft$$

as with thin cylinders, only that f is the *average* hoop stress.

Now, in this diagram it is evident that only the inner rings are of much value in resisting the load, and the outside rings do not

Digitized by Google

do anything like their share of the work, so to speak. We pass, therefore, to the practical principle of

Initial Stressing (during manufacture), by which the outer rings may be made of greater assistance. To do this, they are to be stressed initially in *tension*, and the inner rings in *compression*, and it will be shown that when the fluid pressure is admitted, the internal hoop compression will be more than relieved, while the external hoop tension will be but slightly increased.

The first and most important method of arriving at the above result is to build the cylinder in separate concentric tubes, to be shrunk, the outer over the inner ones.

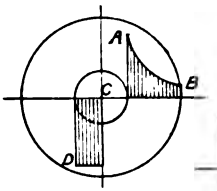

Fig. 747.

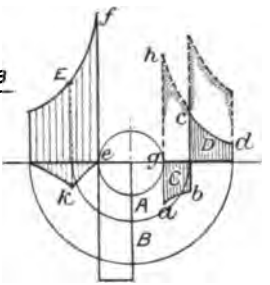

Fig. 748.

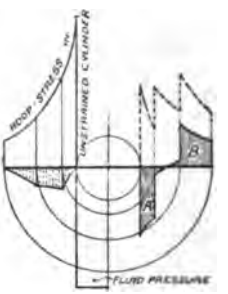

Fig. 749.

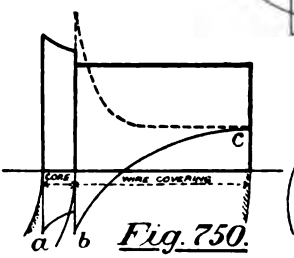

Fig. 750.

Fig. 751.

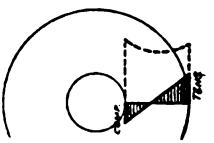

Fig. 752.

Stresses in Thick Cylinders.

The tube B, Fig. 748, being shrunk over A, exerts a pressure between their common surfaces, as shown on the left at *k*, and this pressure decreases to nothing at the inside and outside of the cylinder. But such pressure may be likened to a fluid pressure on the inside of B and the outside of A, and it will be easily

Digitized by Google

seen that hoop-stress diagrams like C and D will be formed, which can be calculated if we know the pressure between the surfaces. It must be noted also that C is compressive and D is tensile hoop stress. When, however, the fluid pressure is admitted to the cylinder, it will tend to equalise the stresses, for, supposing E to be the diagram obtained with a cylinder not initially strained, the diagram E must, in the actual case supposed, be superposed on C and D, having regard to sign, or be set up on the base line *a b c d*. The dotted areas will be the final result, and the real point for us to notice is that, instead of stressing our cylinder to *e f*, it is only stressed to *g h*, the outer rings taking their share, and thus the *thickness of the cylinder may be much less* than if it had not been initially strained. The areas C and D will be exactly equal, because there is equilibrium at first.

A still more equable stress may be obtained (and consequently less thickness required) by adopting a greater number of rings.

Fig. 749 is a diagram of the stresses when three rings are used, and will be easily understood from the last diagram. As before, A = B in area.

In applying these principles to the manufacture of large guns, both the initial and maximum firing tensions are kept within 18 tons per square inch. By using the modulus of elasticity it will be quite easy to find the hoop stress produced at the ring between the tubes, and conversely the radial pressure there, caused by extension due to shrinkage.

When guns are constructed by winding wire very tightly round a thin core, a perfectly equable stress may be obtained, and consequently these guns are lightest of all. In Fig. 750, dotted lines show tension put in the wire as it is being wound on. The curved line *a b c* shows resulting stresses in the wire after the gun is finished, and the thick line the hoop stresses when the gun is fired.

Cast Iron Cylinders, if cast without any precaution, will be in a state of compression on the *outside*, after cooling, and of *tension* on the inside. Building then the hoop-stress diagram, Fig. 751, upon the incline, we get a very much worse result than before; for the initial stresses, caused by the inside cooling last (*see p.* 69), only assist the destruction of the cylinder when the

Digitized by Google

fluid pressure is admitted. We therefore require an *inordinate thickness.*

But if we cause the core, during casting, to lose its heat more rapidly than does the exterior, by circulating cold water through a central pipe, the inside will cool first, and a *tension* will be caused on the outside while a *compressive* hoop stress is felt on the inner rings.

Building now the 'fluid' hoop stress on the new inclined line, we obtain the dotted curve shown in Fig. 752. The hoop stress is generally more equalised, and the internal hoop stress (or maximum) is decreased by the value of the initial compression. Again, therefore, we have been enabled to decrease the stress, and consequently the *necessary thickness*, by the artifice of initial stressing, caused by casting with a cold-water core.

Building-up from separate tubes must, however, be looked on as the very best method, where, in fact, an almost certain desired result may be obtained. (*See Appendix II., p.* 841.)

P. 407. **Pitch of Riveting.**—It should be distinctly understood that the formula, pitch $= 1{\cdot}09 + d_1$ is only true if we use steel both for rivets and plates, and that we do not adopt plates above an inch in thickness. All other cases must be referred to the general formula on p. 407. The diameter of the rivet for a particular plate has, up to the present time, been fixed by practical considerations of punching. It is open to question, now that boilers are drilled, whether some alteration may not with advantage be made, tending to increase the diameter of the rivet for thin plates. (*See Appendix III., p.* 921.)

Pp. 442-6. **Position of Supports for Least Bending Moment.**—Let the beam A B, Fig. 753, be loaded uniformly, and let it be required to find the position of the two supports when the least bending moment shall act upon the beam. This will occur when the maximum stress caused by the load between C and D is equal to that caused by the loads at A C and D B. Thus, if we considered only the loads at A C and D B, a uniform bending moment is caused by them between C and D, and this moment has to be completely balanced by that at the

Digitized by Google

centre of the beam, caused by the load C D. In short, as $B_m \propto f \propto \delta$, M_1 must equal M_2, in order to cause the least stress in the beam. Assuming the lettered dimensions to represent

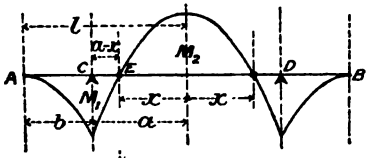

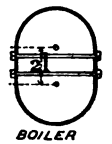

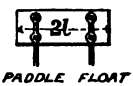

Fig. 753.

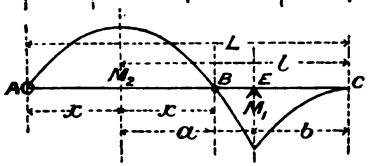

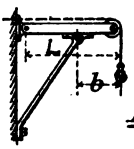

Fig. 754.

feet, and the load to be 1 lb. per foot run, then the bending moments are as follows:—

(1) Due to distributed load at $b = \frac{b^2}{2}$

(2) Due to distributed load at $a - x = \frac{(a-x)^2}{2}$

(3) Due to concentrated load at $E = x(a-x)$
(See also Fig. 400.)

(4) Due to distributed load at $2x = \frac{(2x)^2}{8} = \frac{x^2}{2}$

But $(2 + 3) = M_1$ and $(1) = M_1$
also $(4) = M_2$

$$\therefore \quad (4) = (1), \qquad \frac{x^2}{2} = \frac{b^2}{2}, \qquad \text{and } x = b$$

Again $(4) = (2 + 3)$

$$\therefore \quad \frac{x^2}{2} = \frac{(a-x)^2}{2} + x(a-x)$$

$$2x^2 = a^2 \quad \text{or} \quad 2b^2 = a^2$$

$$\therefore \quad b = \frac{a}{\sqrt{2}} = \frac{l-b}{\sqrt{2}} \qquad \text{and} \qquad b = \frac{l}{1+\sqrt{2}} = .414l$$

Digitized by Google

There are two practical applications of this problem to which reference may be made. The first is where a locomotive boiler-barrel is sometimes flattened to save width, and the flat portion becomes such a beam as we have discussed, the supports being then represented by stay bolts. The other example is that of a paddle-wheel float, when supported by the float arms at two places only.

An extension of the problem is shown in Fig. 754. There are two supports, A and E, but the former is a hinge. Using similar letters,

$$x = b, \qquad b = \cdot 414l, \qquad l = L - x = L - b$$

$$\therefore\ b = \cdot 414\,(L - b), \qquad \text{and} \quad b = \cdot 292\ L.$$

A similar case, but with concentrated load at C, is that of the wall crane, Fig. 754.

P. 445. **Continuous Beams.**—The following is a simple method of finding the reactions on the supports in the case of a beam over two spans.

Suppose the mid-support be removed, a deflection will be caused by the *uniform* load, $2\,W_1$.

$$\Delta_1 = \frac{(2\,W_1)\,l^3}{48\,EI} \cdot \frac{5}{8} \qquad \text{(See p. 451.)}$$

Now the upward pressure that would neutralise this deflection would have the same value as a *concentrated* load capable of causing it. Let this load = R: then the deflection caused by R,

$$\Delta_2 = \frac{R\,l^3}{48\,EI} \quad \text{and equating the two values,}$$

$$\frac{R\,l^3}{48\,EI} = \frac{(2\,W_1)\,l^3}{48\,EI} \qquad \text{whence } R = \frac{10}{8}\,W_1$$

Digitized by Google

Chapter IX.

P. 481. **The Lever-loaded Safety Valve.** The effect of the weights of lever and valve may be taken into account as a downward force at the valve centre, which has to be overcome by the steam pressure. In addition to the lengths shown in Fig. 438 (measured in inches), and the weight w (in lbs.), Let

w = weight of lever, in lbs.

v = weight of valve and valve centre, in lbs.

l = distance from fulcrum to centre of gravity of lever, in inches.

p = pressure per square inch of the steam.

d = diameter of valve, in inches.

Then, Upward moments = downward moments

$$\left(\frac{p\pi d^2}{4} - v\right)a = \mathrm{W}\,\mathrm{A} + w\,l$$

$$\therefore \mathrm{W} = \frac{(\cdot 785 p d^2 - v)\,a - w\,l}{\mathrm{A}}$$

P. 487. **The Quadric Chain.** Referring to Fig. 449, the examples at 3 and 4 are spoken of as *parallel-crank* chains; while that at 1 is called a *lever-crank* chain, from the fact that the beam rocks like a simple lever, and the crank completely rotates.

P. 503. **Oldham's Coupling,** Fig. 474, is derived from the elliptic trammels, Fig. 448, where the trammel bar is fixed and the cross revolves. The relative motion being unchanged, a fixed pencil held against C's face will produce an elliptical arc. Also C's centre will describe a circle passing through centres A and B (*Euclid*, III. 31), for the angle between grooves is always a right angle. Hence (*Euclid*, I. 32) the angular movements of A and B are identical.

P. 512. **Approach and Recess.** During approach the flank of the driving wheel is acting on the point of the driven wheel (*see* Fig. 501), while during recess the point of the driver acts upon the flank of the driven wheel. On the supposition that the *pushing* friction during approach is more prejudicial than the

Digitized by Google

trailing friction during recess, some clock makers cut away the flanks of the driving wheel and the points of the driven wheel. A much larger number of teeth are then, however, necessary to secure smooth action.

Chapter X.

Pp. 594 and 620. **The Dryness of Steam.**—The proportionate dryness of steam at all points of the stroke can be very conveniently represented upon the indicator diagram by means of a simple construction. Imagine the indicator cards in Fig. 755 to have been obtained in the usual manner, and then to have been plotted by the method shown on p. 622, the clearance volumes being of course known in terms of the cylinder volumes. Let it also be supposed that the weight of steam passing through the cylinders at every stroke has been found experimentally by measuring the feed water entering the boiler, the latter being of course only occupied in supplying steam to the engine. Referring

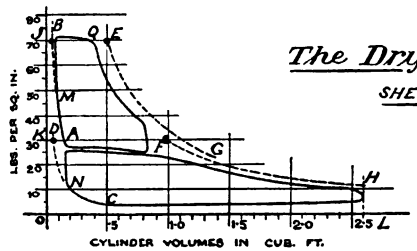

The Dryness of Steam
SHEWN GRAPHICALLY.
Fig. 755.

next to the diagram on p. 598 or to the table of saturated steam volumes in this appendix, the volume of 1 lb. weight at 70 lbs. absolute pressure is found to be 6·1 cub. ft., from which the volume of steam due to the feed water weight can be at once deduced. Similarly the same quantity of steam, when expanded to 30 lbs. absolute pressure, will have a volume that may be ascertained from the tables, or can be found by constructing the saturation curve.

Referring again to the diagram, the compression curves are to be continued, as at A B and C D. Then at B E set off the steam

Digitized by Google

volume at 70 lbs. pressure, and at D F that due to 30 lbs. pressure. Through E and F respectively draw the saturation curves E G and F H, which for rough purposes may be hyperbolas with origin O; but, for greater accuracy, may be drawn with a new origin for each curve, according to the manner described on p. 624, and shown in Fig. 624. Thus J E being divided into 6·1 parts, and K F into 13·5 parts to find the scale of specific volume, the origin for each curve must be moved ·41 ft. to the right and ·35 lb. below the old origin, and the curves are then treated as hyperbolas from the new origins. The method of constructing an hyperbola is shown at p. 615.

It will be seen that there is a separate saturation curve for each cylinder of the compound engine, but this is only due to the fact that the clearance volume in the L.P. cylinder does not bear the same relation to the steam volume as did that in the H.P. cylinder. If it be desired to show both cards under one saturation curve, it is only necessary to transfer the lower card to tracing paper and move it to the right until the curves E G and F H coincide. Or another method is to re-set out the cards by placing the curved lines C N D and A M B upon the vertical line O K J, and so move the cards to the left, distorting them somewhat. One saturation curve may then be drawn through E, B E being the same as before, for the clearance steam is now eliminated. Of course, instead of completing the compression curves by the dotted lines, the curves could have been drawn for any pressures between A M in the H.P. cylinder, and between C N in the L.P. cylinder.

Assuming now that the cushion steam is dry—an assumption involving but very slight error—the dryness of the steam may be found for any point in the stroke of either piston, by comparing the total volume of steam in the cylinder with that shown by the saturation curve at that point, the difference of these volumes showing the amount of steam condensed by the cold cylinder walls. Thus, at commencement of the H.P. stroke:—

$$\text{Dryness fraction} = \frac{JQ}{JE}$$

$$\text{Wetness fraction} = \frac{QE}{JE}.$$

Digitized by Google

And these quantities may be ascertained for other points of the stroke by measuring similar intercepts along horizontal lines.

It will be noticed that the steam always tends to become dryer toward the end of the stroke (due to re-evaporation), though never becoming entirely so; and the value of compounding in drying the steam is also apparent.

P. 608. **Adiabatic of Saturated Steam.**—Zeuner gives the following empirical formula to find the value of the exponent n in the equation to the adiabatic for saturated steam :—

$$n = 1{\cdot}035 + (\cdot 1 \times \text{dryness fraction}).$$

from which it would appear that Rankine's curve is suitable for steam having 25 per cent. of suspended moisture, while Zeuner's curve is for steam initially dry.

P. 609. **Expansion of Wet Saturated Steam.**—It has been already pointed out that the saturation curve is a curve of lowering temperature. Also that the compression of dry saturated steam at constant temperature causes it to become wet by partial condensation, because steam at a given temperature can only exist at a certain pressure. Conversely, the expansion of steam at constant temperature will tend to dry it; but if there be sufficient water present, the pressure will not fall during the expansion, and therefore the curve on the diagram would be a horizontal straight line.

Calculation of Specific Volume of Dry Saturated Steam, when the temperature, pressure, and latent heat are known.

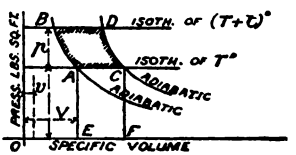

Fig. 756.

Dealing with 1 lb. weight of steam, whose volume and pressure are shown at A, Fig. 756 :

Digitized by Google

Let L = latent heat at temp. T (in foot-pounds).

T = temp. of steam along AC (absolute).

t = a small difference of temperature between steam at AC and that at BD.

v = volume of 1 lb. of water near boiling point (cub. ft.).

V = volume of 1 lb. of steam at temp. T (cub. ft.).

P = absolute pressure at A (lbs. per sq. ft.).

p = small difference of pressure between A and B (lbs. per sq. ft.).

H = heat supplied while expanding along AC, causing work area ACEF (foot-pounds).

h = small heat supply due to temp. increase t, causing small work area ABCD (foot-pounds).

While AC represents increase of volume as steam, $V - v$ is increase of volume from water to steam. But these increments are respectively caused by the heats H and L. Therefore,

$$H : L :: AC : V - v, \qquad \text{or } H = \frac{L\,(AC)}{V - v} \quad \ldots\ldots\ldots(1)$$

Again, it will be seen on reference to a temperature-entropy diagram (*see Appendix II.*) that

$$H : T :: h : t \quad \text{and } h = \frac{Ht}{T} = \frac{L\,(AC)}{V - v} \times \frac{t}{T} \ldots\ldots(2)$$

But ABCD = AC × p, and the work area thus formed is equal to the heat supplied for the purpose : or

$$h = AC \times p \ldots\ldots\ldots\ldots\ldots\ldots(3)$$

Equating to (2), $AC \times p = \frac{L\,(AC)}{V - v} \times \frac{t}{T}$

$$\therefore \text{ Specific vol. } V = \frac{Lt}{Tp} + v$$

In applying this formula, take $t = 1°$, and from the table find the corresponding increase of pressure p, in lbs. per sq. ft. Take the volume v of 1 lb. of water = $1 \div 62{\cdot}5 = {\cdot}016$ cub. ft. Inserting also the absolute temperature T and latent heat in foot-pounds, the specific volume is found. (*See Appendix III., p.* 933.)

P. 611. **Engine and Boiler Efficiencies.**—There are very many ways of stating the economy of a steam engine, which,

Digitized by Google

if not made quite clear, are calculated to confuse the student. We will, therefore, explain each method as fully as need be.

1. *Duty.*—This is the oldest method. The boiler and engine are considered as one machine, and the number of *foot-pounds of work* done are stated, as obtained from 1 *cwt. of coal*, the best Welsh coal being generally used. The value of this quantity having been found from time to time for the best engines (about 60 to 100 million foot-pounds), constituted a sort of standard for the performance of others.

2. *Coal burnt per I.H.P. per hour.*—This, the later standard, also including both boiler and engine, exists more or less at the present time. Its value was, at one period, as much as 4, but even with single engines it was soon lowered to 3, in two-stage compounds to $2\frac{1}{2}$ or 2, and in triple-stage compounds to 1·5 or even 1·3. The connection between standards 1 and 2 is shown as follows :—

$$\text{Duty} = \frac{112 \times 33{,}000 \times 60}{\text{lbs. of coal per I. H. P. hr.}}$$

a relation easily proved by simple proportion.

3. *Steam used per I. H. P. per hour.* — This is a standard of comparatively recent introduction, and is adopted where the engine's performance is to be gauged apart from that of the boiler. The feed water weight is measured, and priming eliminated as much as possible. The value may vary from $12\frac{1}{2}$ lbs. in extremely good cases to 30 lbs. with ordinary working; 24 being good for non-condensing engines.

4. *Efficiency of Boiler.*—Just as the weight of steam used is often taken to represent the efficiency of the engine, so the weight of water evaporated is often called the efficiency of the boiler. The evaporation per lb. of coal may be taken at 10 lbs in good cases. A better statement of boiler efficiency may be made by separately calculating the heat units given to the water and the heat units obtained by the combustion of 1 lb. of coal. Then,

$$\text{Boiler efficiency} = \frac{\text{Heat units given to water}}{\text{Heat units from coal}}$$

which may have a value of 70 per cent in a good boiler.

Digitized by Google

5. *Efficiency of a Perfect Engine*, that is, of an engine having a reversible cycle. This is the highest efficiency to be obtained by an engine working between given temperatures, and may therefore be termed the *ideal efficiency*. It has already been shown to be

$$\frac{T_1 - T_2}{T_1}$$

where T_1 is the temperature of the furnace and T_2 that of the condenser. It includes, therefore, the efficiency of the boiler, but, dealing only with the diagram horse power, does not take account of mechanical imperfections. Supposing such efficiency once obtained with given temperatures, the engine might yet be improved by increasing the range of temperature, provided we do not exceed the bounds of reason. Very often this efficiency is taken for the engine only, with T_1 as live steam temperature; but the steam being at a much lower temperature than the furnace, a much lower ideal efficiency is possible. A very good value by the first method is 77 per cent., and by the second, 32 per cent.

6. *Thermal Efficiency of a Real Engine.* — There are two methods of stating this, the relation of the work done to the heat expended, according to whether we include the boiler and engine, or take the engine alone. Thus we have :

$$\text{Thermal efficiency } (a) = \frac{33{,}000 \div 772}{\text{heat units in steam per I. H. P.}}$$

$$\text{Thermal efficiency } (b) = \frac{33{,}000 \div 772}{\text{heat units from coal per I. H. P.}}$$

Then a good value for a might be 14 to 20 per cent., while for b it might be 9 to 13 per cent. Of course, if the thermal efficiency is to be compared with the Carnot cycle, the latter must be measured by similar temperatures.

7. *Relative Efficiency.*—This, as its name implies, is a comparison of the thermal efficiency of an engine with that of a reversible cycle having the same range of temperature, and is the

Digitized by Google

fairest method of showing an engine's performance. It may be stated thus :—

$$\text{Relative efficiency} = \frac{\text{Thermal efficiency}}{\text{Efficiency of Carnot cycle}}$$

Of course, whatever is included under the thermal efficiency will be included in the Carnot efficiency, and no more. The value of the relative efficiency may vary from about 40 to 70 per cent.

8. *Mechanical efficiency of the engine* merely takes account of engine friction and compares the work on the indicator diagram with that given to the crank shaft. Then,

$$\text{Mechanical efficiency} = \frac{\text{Brake horse power}}{\text{Indicated horse power}}$$

And a value of 85 per cent. is considered good.

9. *Total efficiency of a real engine.*—Finally, the total percentage of work gained, at the shafting, by the burning of a given quantity of coal may be stated as—

(I.) Boiler effy. × thermal effy. (a) × mechanical effy.

But, as we can never get more work out of the coal than is shown by the ideal efficiency, the fairest statement is as follows :—

(II.) Boiler effy. × relative effy. (a) × mechanical effy.

from which we may at once find whether our engine and boiler are wasteful. (*See also Appendix II.*)

P. 612. **Reversible Cycles.**—Any engine that transforms all the heat, represented by drop of temperature, into work, is a reversible engine, and the arguments on p. 612 fully apply. The thermal efficiency of such an engine would be the same as Carnot's (p. 611).

Now there are two methods of arriving at a reversible cycle. The first method is shown by the Carnot cycle, where heat is only taken in at the highest temperature, and rejected at the lowest temperature. Were intermediate temperatures adopted for some of the heat, such heat would have less 'availability,' and as proof that no heat is supplied or removed between τ and τ_2, the curves

Digitized by Google

of expansion and compression between these temperatures are strict adiabatics.

The second and only* other method of obtaining reversibility is to use a *regenerator*, as first practically attempted by Stirling, and afterwards by Ericsson in their respective air engines. Diagram A, Fig. 757, shows Stirling's cycle. The gas having a pressure

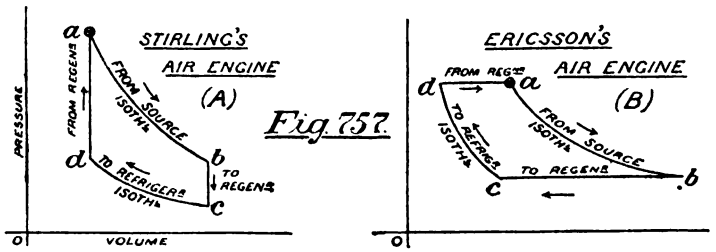

Fig. 757.

and volume corresponding to *a*, took in heat along the isothermal *a b*; rejected a portion during *b c* to the regenerator, at constant volume; was compressed isothermally from *c* to *d*, during which time heat was rejected to a refrigerator; and between *d* and *a* again received the heat which was rejected from *b* to *c*. Although *b c* and *d a* are substituted for adiabatics, the giving and receiving of heat is strictly within the engine itself, the heat rejected at *b c* being fully returned at *d a*, so the reversibility is unimpaired. Diagram B illustrates the cycle of Ericsson, which is only different from that of Stirling in that the regenerator gives or abstracts heat at constant pressure. As before, *a* may be considered the starting-point. * (*See also Appendix II., p.* 883.)

P. 613. **Reversibility in the Steam Engine.** — It appears, therefore, that supply and rejection must be along isothermals, and expansion and compression along adiabatics (unless a regenerator be used). Remembering that isothermals for saturated steam are horizontal straight lines, the reversible cycle in Fig. 758 for the steam engine is easily understood. Thus *a b* is the isothermal of reception, *b c* the adiabatic of expansion, *c d* the isothermal of rejection, and *d a* the adiabatic

Digitized by Google

of compression. Such an engine uses the same substance over and over again, and the cycle is strictly reversible, for we have complete expansion to *c*, and complete compression to *a*. Its

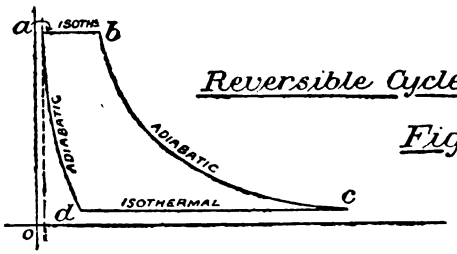

Reversible Cycle for Steam.

Fig. 758.

efficiency therefore is measured like the cycle of Carnot. The substance is water at *a*, and steam and water at other times.

P. 623. **Ratio of Expansion in a Single Cylinder.**—As a result of many recent practical experiments, it is found that a ratio of expansion of between 6 and 9 is the highest limit which can be adopted with economy, though a ratio of 4 will yield practically as good results.

P. 624. **Theoretical Diagram.**—In order to make the calculations from the preliminary diagram agree with practice, Prof. Unwin introduces a fractional coefficient in the formulæ, which he calls the *diagram factor*, and which is deduced from experimental results of engines similar to that under consideration. The value of the factor varies from ·85 to ·95 in good engines.

P. 637. **Exhaust Lap.**—In the case of a D valve, an early cut-off to steam will cause an early cut-off to exhaust (*see* Zeuner's diagram, p. 660). In such a case, if a later compression point be advisable, it may be necessary not only to eliminate exhaust lap entirely, but actually to give a small opening to exhaust when the valve is at mid stroke. Such opening is then termed *negative lap*, and would be shown on the steam circle in Fig. 653.

Digitized by Google

P. 650. **An Isochronous Governor** is a governor having but one speed consistent with stability. A parabolic governor is isochronous excepting for the influence of friction, its stable speed occurring when the balls are in their lowest position. If this speed be increased the equilibrium is neutral, because the height of the cone does not change with the rise of the balls. All over-sensitive governors *hunt* more or less, that is, they are apt to rise too high and fall too low, even with the small changes of load during a revolution, and the result is a condition of oscillation which prevents a settled position corresponding to engine speed. This extreme sensitiveness can be prevented by a spring (Fig. 645), but in a much better way by a dashpot (Fig. 261), for in the latter case the air causes a constant though small resistance.

P. 700. **Ignition Tubes.**—Porcelain tubes have been used for some time (1895), their life being about twelve months. Iridio-platinum is also now adopted (1898) with great success.

Description of an Engine for Refrigerating Air.—When work is done on a gas, without subtraction of heat, the whole work is expended in raising the temperature of the gas; and when a gas does work without addition of heat the whole work is obtained by the abstraction of heat from the gas, causing a decrease of temperature. In practice these results are only partially effected, but the general changes obtained may be understood by reference to Fig. 562, and P. 547, where (theoretically) air at 60° F. is cooled to − 201° F.

The work derived from the expansion of steam in the engine cylinder is employed to drive the piston of an air-compressing cylinder, which draws air on the inner and compresses it on the outer stroke, up to 90 or 100 lbs. by gauge. The temperature rising to 200° or 300°, the cylinder is jacketed with cold circulating water, to prevent damage to lubricants, and thus the air is *partially* cooled. Leaving this cylinder, it passes through the pipes of a surface condenser, being there cooled to 60° or 70° by cold water circulation round the tubes; and from the condenser it enters an expansion cylinder covered with a non-conductor. Here the air does work, helping the engine, and, cooling to

Digitized by Google

$-10°$ or $-30°$, is exhausted to the storage chamber, from which, after doing duty, it is redrawn by the engine to supply the compression cylinder. By this arrangement there is less heat to abstract than if air at 60° were used, and an important economy results. The compression and expansion cylinders must lie apart from the steam cylinder and from each other, and all the pistons are connected to one crank shaft, which has, usually, a heavy fly wheel. The parts required are therefore, in order :—Steam cylinder, compression cylinder with water jacket, condenser, expansion cylinder (non-conducting), and storage chamber (non-conducting).

At first sight it would appear that heat abstraction was entirely due to the use of condenser and water jacket, but this is only a part of the truth. Heat given during adiabatic compression

$$= \frac{p_2 v_2 - p_1 v_1}{\gamma - 1} = \frac{c}{\gamma - 1} \times (\text{diff. of temp.})$$

$$\left.\begin{aligned} \text{But } \gamma &= \frac{K_p}{K_v} \\ \text{and } K_p - K_v &= c \end{aligned}\right\} \therefore \frac{c}{\gamma - 1} = (K_v \times \text{diff. of temp.})$$

Again, condenser and jacket remove heat at constant pressure, and the amount

$$= K_p \times (\text{diff. of temp.})$$

Also, heat removed during adiabatic expansion

$$= K_v \times (\text{diff. of temp.})$$

Assuming, as in the theoretical example, that rise of temp. during compression = fall of temp. during expansion, the various heats may be represented as follows .—

$$N = \text{normal heat (N.T.P.)}$$

1. After compression, heat in gas
$$= N + K_v \quad \text{(latter given by engine)}$$
2. After condensation, heat in gas
$$= N + K_v - K_p \quad (\text{heat now in condenser} = K_p)$$
3. After expansion, heat in gas
$$= N + K_v - K_p - K_v$$
$$= N - K_p \quad (\text{heat taken by engine} = K_v)$$

Digitized by Google

Let condenser heat go to boiler, and thence to engine; let all expansion heat be abstracted by engine; and let the total, together with remaining heat in storage chamber, be used to compress the gas; then

From storage chamber.....	Heat =	N – K_p
„ condenser and jacket	„ =	K_p
„ expansion cylinder...	„ =	K_v
	Total =	N + K_v

which is the same as (1), or the cycle is complete, and the action (if without loss) would go on for ever.

Taking values for K_p and K_v and N as normal heat; the deficiency in N after condensation is represented by $K_p - K_v = 53{\cdot}2$, and a further deficiency, shown by $K_v = 130$, occurs during expansion, the heat abstractions being therefore 29 per cent. and 71 per cent. of the total abstractions, respectively. If the drop be less than the rise of temperature, the condenser will abstract a larger proportion, and if the condenser could take its heat at constant volume, the expansion would do the whole work of heat abstraction, for then the condenser abstraction would equal the compression supply. The condenser water goes partly to feed the boiler, and partly to heat work-rooms, &c.

Fig. 759 is a section through the air cylinders, whose pistons are connected to the engine crank-shaft. A, the compression

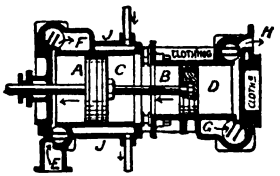

Refrigerating Engine.

Fig. 759.

cylinder, receives air from the storage chamber, through E, which after compression escapes by F to the condenser. Thence it re-appears, cooled to 60° or 70°, and entering the expansion cylinder D by passage G, the piston moves upward. The air volume having shrunk by cooling, cylinder D is much smaller

Digitized by Google

than A. As the air does work, its temperature falls, when it is exhausted, into the storage chamber to re-appear at E. Mechanically-driven valves, Corliss-type, govern the entrance or exit of air. B C is open to the atmosphere, keeping the cylinders separate, and the pistons are packed with vulcanised-rubber rings, hard on their outer circumference. The stuffing box is packed with rubber rings. Plenty of oil must be injected in C and B to secure air-tightness.

The arrangement in Fig. 759 being duplicated constitutes a double-acting contrivance, or double-acting cylinders may be placed side by side.

Table of the Properties of Saturated Steam.

Absolute Pressure, p.	Temperature, Fahr. $t°$.	Specific Volume, V.	Absolute Pressure, p.	Temperature, Fahr. $t°$.	Specific Volume, V.
·085	32	3416	17·0	219	23·2
·5	80	640	18·0	222	21·9
1·0	102½	332	19·0	225	20·8
1·5	116	227	20·0	227½	19·9
2·0	126	173	21·0	230	19·0
2·5	135	140	22·0	232½	18·2
3·0	142	118	23·0	235	17·5
3·5	148	102	24·0	237½	16·8
4·0	153	90·4	25·0	240	16·1
4·5	158	80·7	26·0	242½	15·5
5·0	163½	73·2	27·0	244½	15·0
6·0	171	61·7	28·0	246½	14·5
7·0	177	53·4	29·0	248½	14·0
8·0	183	47·1	30	250½	13·6
9·0	188	42·1	32	254	12·8
10·0	192½	38·1	34	257½	12·1
11·0	197	34·9	36	261	11·5
12·0	201½	32·1	38	264	10·9
13·0	205½	29·8	40	267	10·4
14·0	209½	27·8	42	270	9·92
14·7	212	26·5	44	273	9·49
15·0	213	26·1	46	276	9·1
16·0	216	24·5	48	278½	8·74

Digitized by Google

Table of the Properties of Saturated Steam (*continued*):

Absolute Pressure, p.	Temperature, Fahr. $t°$.	Specific Volume, V.	Absolute Pressure, p.	Temperature, Fahr. $t°$.	Specific Volume, V.
50	281	8·41	115	338	3·85
52	283½	8·11	120	341	3·70
54	286	7·83	125	344	3·57
56	288½	7·57	130	347	3·44
58	290½	7·32	135	350	3·32
60	292½	7·09	140	353	3·20
62	294½	6·88	145	356	3·10
64	297	6·67	150	358½	3·01
66	299	6·47	155	360½	2·92
68	301	6·28	160	363	2·84
70	303	6·11	165	366	2·76
72	305	5·96	170	368½	2·68
74	306½	5·81	175	370½	2·60
76	308½	5·67	180	373	2·53
78	310	5·53	185	375	2·47
80	312	5·4	190	377	2·41
82	313½	5·27	195	379½	2·35
84	315	5·15	200	381½	2·30
86	317	5·04	205	383½	2·25
88	318½	4·94	210	385½	2·20
90	320	4·84	215	387½	2·15
92	321½	4·74	220	389½	2·10
94	323½	4·64	225	391½	2·05
96	325	4·55	230	393½	2·00
98	326½	4·47½	235	395½	1·96
100	327½	4·39	240	397½	1·92
105	331	4·19	245	399	1·88
110	334½	4·01	250	401	1·85

Digitized by Google

Digitized by Google

APPENDIX II.

(THIRD EDITION.)

CHAPTER I.

Pp. 3 and 42. **Remelting of Cast Iron.**—Experiments made by Fairbairn in 1853, by melting Eglinton hot-blast pig up to eighteen times, showed that while at first there seemed to be some improvement, there was a deterioration in the later meltings, the iron becoming white and hard. Chemical examinations then made by Snelus, and lately repeated by Mr. T. Turner on the original pieces (lent by Prof. Unwin) indicate that the action is one of oxidation, resembling that of the puddling furnace or Bessemer converter.

MR. THOS. TURNER'S ANALYSIS.

Number of melting.	Total Carbon.	Combined Carbon.	Silicon.	Sulphur.	Mangan.	Phosp.
1	2·67	·25	4·22	·03	1·75	·47
8	2·97	·08	3·21	·05	·58	·53
12	2·94	·85	2·52	·11	·33	·55
14	2·98	1·31	2·18	·13	·23	·56
15	2·87	1·75	1·95	·16	·17	·58
16	2·88	—	1·88	·20	·12	·61

P. 5. **Moulding Sand.**—*Floor sand* may have 6 parts by weight of old sand to 2 of new sand and half a part of coal dust; *facing sand*, 6 of old sand to 4 of new sand and one of coal dust. Too much burnt sand, even if ground up, cakes when re-used, and causes the metal to boil. Too much wetting is as bad as too little, but the requisite consistency may be roughly tested by grasping a handful of the sand, which should just retain its shape when the hand is again opened. A more scientific method is used by Mr. Bagshaw, who prepares bars of sand in moulds, by light pressure, 12 inches long and 1 inch square, which he slowly pro-

Digitized by Google

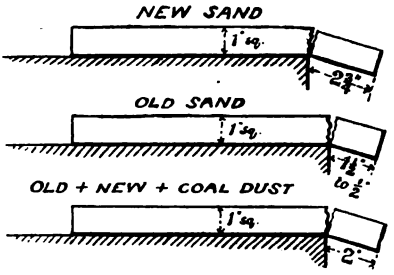

Sand Testing.

Fig. 760.

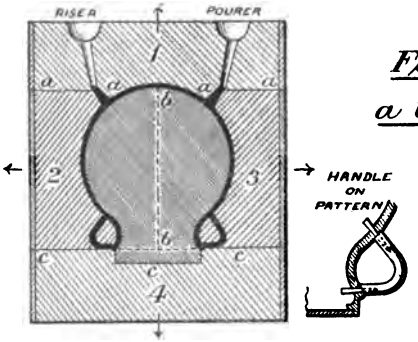

Four-part Box. a three-legged pot.

Fig. 761.

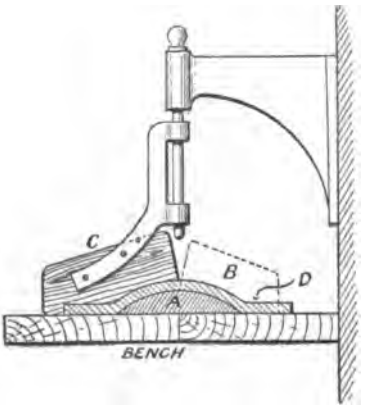

Making a Plaster Pattern.

Fig. 762.

Digitized by Google

jects over a table, as in Fig. 760, till they break by the weight of the over-hanging portions, the results being seen in the diagram. Unless the sand be properly prepared by riddling, treading, and wetting, no amount of venting can make a good casting.

P. 12. **Four-part Box.**—However intricate in form a casting may have to be, the difficulties of moulding may always be met by the introduction of sufficient boxes or of loose pieces. Fig. 761 shows a method of moulding a three-legged pot or 'skillet,' practised at the Carron ironworks for an almost unknown period. Four boxes are used, numbered 1, 2, 3, and 4, which give also the order of removal, there being partings at *a a*, *b b*, and *c c*. The handles are pegged loosely to the pattern from the inside, and are afterwards removed in a downward direction, the core being struck on a rough iron body.

As evidence of what may be done when given enough moulding-boxes and loose pieces, there was exhibited at Paris in 1889, by the Société Cockerill, a single casting of 10 tons weight, representing three marine cylinders, with standards, bed-plate, feed- and air-pumps.

P. 14. **Plaster Patterns.**—The use of these is not difficult to explain, their introduction here being due to their great similarity to loam patterns. Fig. 762 will indicate the process, it being desired to make a plaster pattern for a dome cover. Firstly, a supporting mound A is made by the rotation of board B over moist plaster-of-Paris, the vertical spindle hanging from a wall bracket. When dry, the mound is painted with shellac varnish, and the thickness piece described by the board C. The pattern D, thus formed, is afterwards removed, varnished, and used exactly as a wooden pattern would be; and with care may serve for a large number of impressions.

A further use of plaster occurs in moulding thin flat objects. Imagine a flat cover, Fig. 762*a*, say for a sand-box. Firstly, a wooden pattern, being impressed in sand as at A, and the parting made, the upper box is filled with plaster. When the plaster sets, the sand is removed, the plaster surface varnished; and the bottom box similarly treated, as at B. Secondly, the boxes are separated and the pattern removed. Thirdly, a new pair of boxes is provided of the same dimensions, and, taking each box sepa-

Digitized by Google

rately, a plaster *cast* is taken from each of the plaster *blocks* just made. Now these *casts*, after drying, could not be fitted together, for each is larger than its respective *block* by the thickness of the casting; but if each *cast* be separately impressed in sand, and the

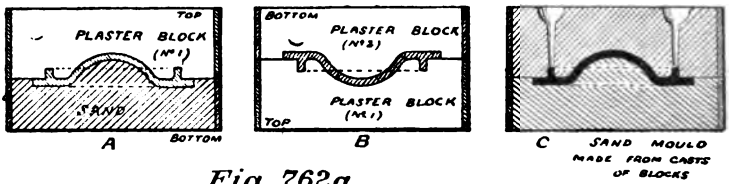

Fig. 762a.

Flat Moulding with Plaster Blocks.

two sand impressions fitted together, they will appear as at C, the thickness space being left, into which the metal is run.

The casts having been varnished, will materially increase the speed of moulding, for a pair of casts may be divided between two men, and the removal of the cast from the sand is more expeditious than a thin pattern. The blocks may be retained for future casts, but are of no use in moulding.

P. 27. **Cubical Moulds in Loam.**—Deeming it advisable to illustrate flat mouldings in loam by at least one example, the jet condenser, Fig. 763, has been chosen. The casting R consists of a rectangular box containing a pump barrel, and having suitable openings for exhaust, feed, and injection. It was formerly usual to make complete patterns for such objects, but skeletons are now largely adopted, the flat intermediate spaces being struck by loam boards. In our case the wooden skeleton is seen in position in the mould, being there shown by the dense black portions, and in describing its use we shall begin with the cope mould. An iron plate A is placed on brick supports, and a coating of loam laid on, which is then smoothed over with a plain board. The pattern being set upon this bed, right side up, as at B, loam is filled in round the side; then, by using suitable striking-boards, as at D and C, the various flat surfaces are finished in facing loam, and a pattern E embedded for the feed print. The skeleton is now removed vertically, but the bottom strips F F, and the feed flange

Digitized by Google

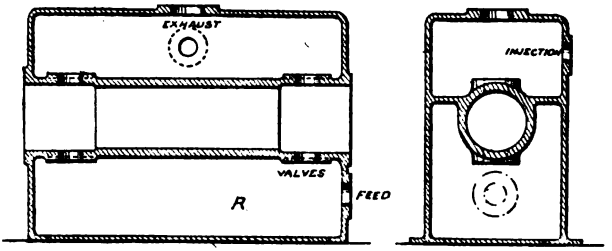

THE CASTING

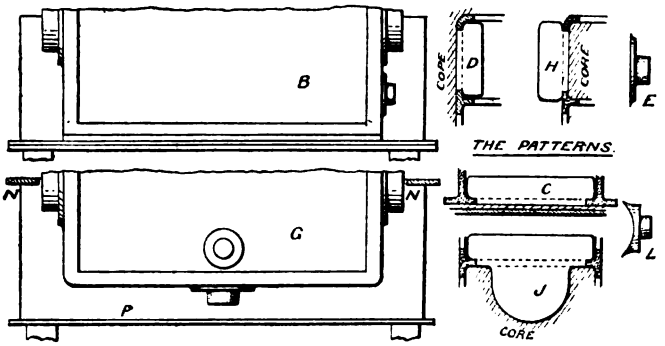

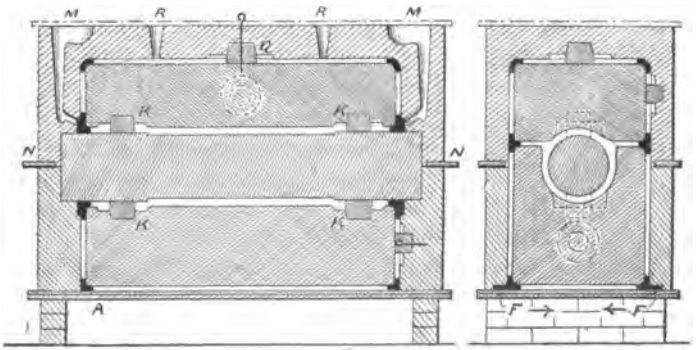

THE MOULD.

Moulding a Condenser in Loam.

Fig. 763.

Digitized by Google

being loose, are afterwards removed horizontally. The top half of the pattern is similarly treated, by embedding in loam as at G, and the plates N and P are bolted together to facilitate lifting and turning over. Here there are two loose flanges as at E, and the runner and riser patterns, all of which have to be inserted.

The two halves of the main core are next made, the skeleton being again used; but this time the loam boards are swept outside it as at H, while the pump barrel is struck by the board J for the lower half, and by a similar, but shallower, board for the upper half. The flanges are supplied by pattern L. The two main cores are, of course, made separately, and in order to remove them the guiding strips for board J must be only temporarily fixed, and the skeleton itself must also be split at the same place. The cylinder core is struck on an iron barrel (see p. 14), and cores are provided for the holes K K, Q, &c.

Lastly, the various parts of the mould are put together: first the lower cope, then the lower core, the cylinder core, upper core, and the upper cope, inserting the before-mentioned short cores, and thus making ready for casting.

P. 31. **Steam Cylinder in Greensand.**—Cylinders of the smaller size cannot be moulded in loam like that on p. 21, so a short account is here given of a greensand mould, aided by Fig. 764. The pattern is split horizontally through the centres of steam chest and barrel, and is supplied with prints B and C to secure withdrawal of the lower half, the sand pockets A, B, and C, being afterwards filled by cores made in suitable boxes. A core U is also moulded for the steam chest, and the barrel core is struck on a pipe M, as already described at p. 14; J showing the straw rope, and H the loam covering. Examining the direction of withdrawal of the upper half of the pattern, shown by the arrow, the steam and exhaust-pipe flanges are seen to be troublesome parts. This is a case where some care in design would obviate much after expense, for the flanges could easily be made to draw if the pipes were equal to them in diameter; as shown, however, they are loose on the pattern, and a third box is provided for their subsequent withdrawal. One other method, at F, requires ring cores between flange and cylinder body. The port cores L L, pipe cores N and K, and stuffing-box cores D D,

Digitized by Google

complete the mould, which, finally supplied with gates and runners G G and risers R R, is ready for casting.

P. 34. **Moulding Machines.**—Besides the machine on p. 32, which has only one use, that of moulding wheel teeth, there

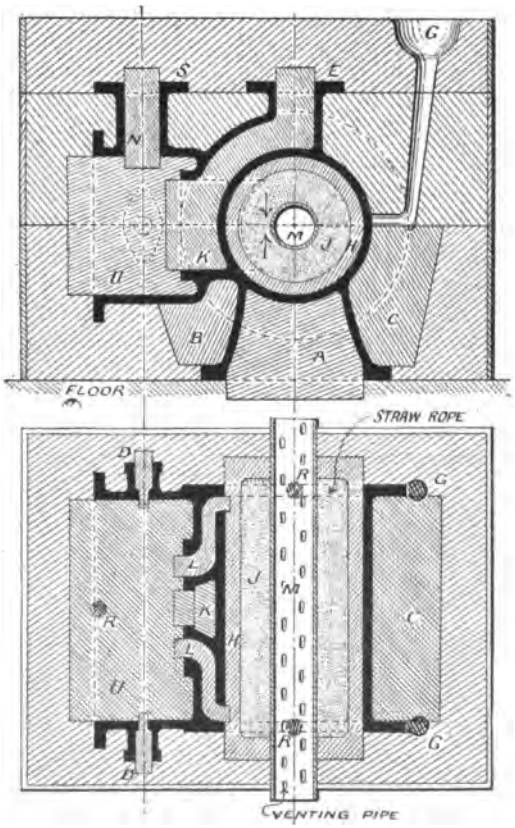

Moulding a Steam Cylinder in Greensand

Fig. 764.

are many machines suited to general repetition work, which is thus done both more quickly and more accurately. The operations of hand moulding are more or less simulated, that is, the pattern is first secured in position and fastened to the box, the sand is next rammed, usually with the box upside down, and

Digitized by Google

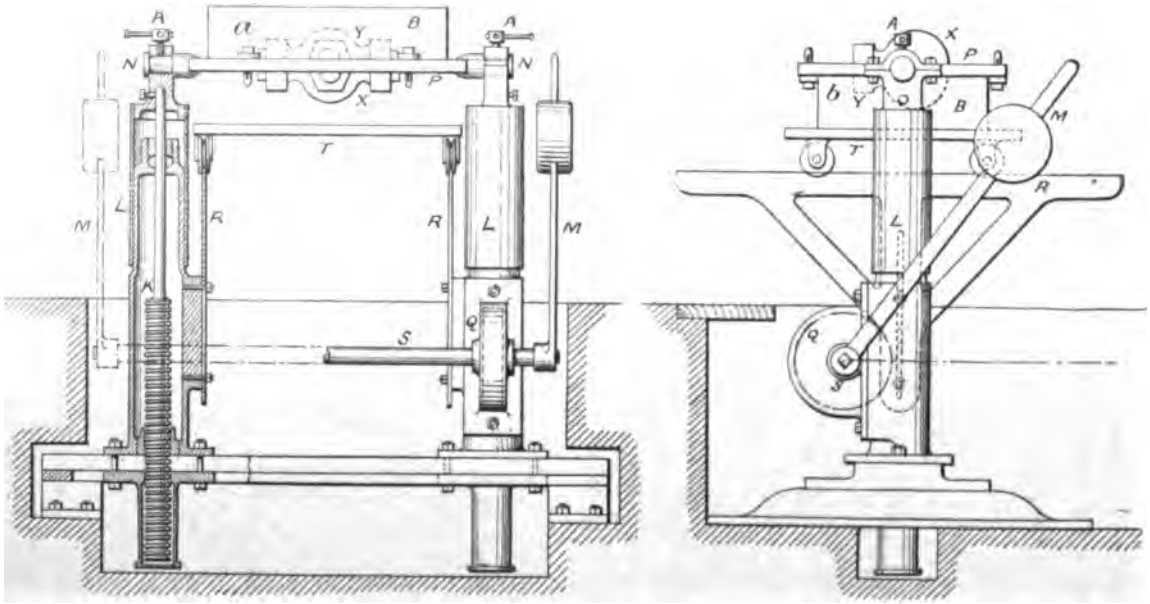

Woolnough & Dehne's Moulding Machine. *Fig. 765.*

Digitized by Google

lastly the pattern is withdrawn *upward* or the box *downward.* Woolnough and Dehne's machine, Fig. 765, provides for a raising of the pattern, a turning over, and removal of box on a short tramway. R R are the rails, clamped at a convenient height, T a table on wheels, P a pattern plate, turning over when required, and at other times clamped horizontally by screws A A. The pattern halves X and Y are first screwed to this plate in mutual correspondence, and the raising and lowering is performed by levers M M, which act on pinions Q Q through shaft S, thereby moving racks K K. The upper ends of the racks support sleeves L L, which carry trunnions N N, thus lifted or depressed as required.

The operations can now be understood. Assuming the box on the top of the plate as at *a*, it is filled with sand and rammed, the screws A A and the cotter bolts preventing rotation and lifting respectively. These screws are next released, the plate raised, and the box turned through 180° into position *b*, an intermediate raising being necessary. Lastly, the cotters are withdrawn, the plate raised, and the box removed by the tramway. This leaves the X half of pattern uppermost, and the previous operations being repeated for it also, the boxes are bolted together for casting.

To avoid the lost time due to raising and turning over, Mr. J. Maclellan has devised a machine where P is rigid, and the box, being always right side up, is filled with sand and lifted till it meets the pattern. The ramming is then performed hydraulically, by the raising of a second box of sand, which is pressed against the first one, thus squeezing some of its contents through the ribs and producing the necessary consistency.

P. 42. **Whitworth Compressed Steel.**—See p. 790.

CHAPTER II.

P. 44. **Woods.**—Passing inward through a tree section, one meets in order the bark, sapwood, heartwood, and pith. The heartwood is best, and the sapwood should be avoided if possible.

Digitized by Google

The circular marks are called ***annular rings***, while the radial ones are termed ***medullary rays***, and the process of drying tends to split the wood along the latter, as already shown. To minimise this fault the tree should be cut into balks before drying, and the latter should preferably be done naturally and gradually, over some two or three years, during which time it is protected from rain, but allowed free air-current. Artificial drying or desiccation produces more splits, or 'shakes' as they are called, and of the latter, 'cup' shakes follow the rings, and 'star' shakes the rays, but the worst shakes are those that twist as they travel along the log. Speaking generally, timber comes under one or other of two great divisions—the pine wood, and the non-resinous or leaf wood. Under the former we have all the softer woods, such as pines, firs, and spruces; while the latter includes the hard woods, such as oak, beech, elm, sycamore, ash, mahogany, &c.

CHAPTER III.

P. 74. **The Blast Furnace.**—Before iron ore is smelted it is often *calcined* or heated alone, either in open heaps or in kilns, one heap of 2000 tons being kept hot for about three weeks. Some ores, such as the Scotch, require no fuel for this purpose, they themselves containing free carbon. An interesting method is adopted in Styria, where the ore travels slowly down an inclined kiln, the fire heat passing in the reverse direction. With the use of the hot blast, calcining is not so necessary.

The design of the blast furnace depends largely on the district, that on p. 73 being from Cleveland, where poor ores and coke fuel are the rule, and the dimensions large. In Scotland, where rich ores and coal fuel are used, even a 60-feet furnace is almost too high, causing much trouble in keeping up the fuel at the boshes. A large furnace may have an output of as much as 500 tons per week. The blast air is heated to about 900° Fahr. by the waste gases from the top of the furnace, and the nature of the charge will depend very materially on the ore, that for Dowlais

Digitized by Google

clay ironstone being (according to Bloxam) for every ton of iron smelted—

Grey Cast Iron	Calcined Ore	48 cwt.
	Coal	50 „
	Limestone	17 „
White Cast Iron	Calcined Ore	28 „
	Hematite...	10 „
	Forge Slag	10 „
	Coal	42 „
	Limestone	14 „

and one-third more air is supplied in the second case. Hematite is a very pure red ore containing some 70% of iron, while the above-mentioned ore will never have more than 50%.

P. 74. **Cast Iron (Effect of Elements).**

Carbon exercises the greatest change in cast iron, and its effects have been well explained.

Silicon, after carbon, is the most useful element. If present up to 3½% it produces soft, strong, grey iron; and if added to a hard, whitish, and cheap iron, it will make it strong and grey. It is now much used to improve poor irons, but should only be present in small quantities in iron that is to be chilled.

Sulphur is prejudicial, causing blowholes: it should not exceed ·15 %.

Phosphorus is also harmful, for though giving fluidity, it produces brittleness if in excess of 1%.

Manganese tends to dissolve the graphite and promote combined carbon, and confers the property of chilling. If more than 1% it causes large crystals as in Spiegeleisen. Rapid solidification also favours combined carbon (see Chilling, p. 34).

The following foundry irons are the mean of many good specimens:

WOOLWICH, 1858.

	Graphite.	Si.	P.	S.	Mn.
Percentages	2·59	1·42	·39	·06	·58

Digitized by Google

ROSEBANK, SCOTLAND.

(Strong foundry iron.)

	Comb. C.	Si.	P.	S.	Mn.
Percentages	·46	1·31	·53	·06	·99

P. 75. **Spiegeleisen** owes its value mostly to the presence of manganese, which varies from 3½ to 11½% at different times, but less than 6% renders the material useless for steel making. There is also about 5% of combined carbon, and the fracture shows large crystals. Probably, too, the silicon present is of use, for both manganese and silicon generally improve the quality of steel.

P. 82. **Whitworth Compressed Steel.**—Apparently the existence of blowholes in steel ingots is due to the fact that low-carbon steel, when molten, is capable of occluding or holding in solution certain gases. When solidification sets in, these gases are liberated from the fluid only to be immediately imprisoned by the solidifying steel, while slower cooling only increases sponginess, for then more gases are given off. To avoid the loss occasioned by the cutting away of the ingot head, and to improve the rest of the metal, three principal methods are in vogue:

(1) Chemical treatment {addition of silicon or manganese}.
(2) Forging or Cogging {under steam hammer or hydraulic press}.
(3) Compression {when fluid}.

Silicon and manganese diminish the gas released, and collect such bubbles as are already formed, but they reduce ductility.

In the Whitworth process, a powerful hydraulic press is applied to the molten steel when in the ingot mould, producing a thoroughly sound material by the elimination of all bubbles. The press is shown in Fig. 766. The fixed head H rests on four screwed columns DD, which are again supported on the base-casting A. The pressure water is admitted under ram B, which

Digitized by Google

rises against the trolley C supporting the ingot mould R; and the load is resisted by the head F, being transmitted thereto by the fixed plunger E. The head F is supported by rods PP attached to the lifting plungers NN, and its upward movement is prevented by the nuts GG, while through it there pass two rapid-pitched screws MM, upon each of which is a wheel L gearing with the nuts GG; and lastly there is a small hydraulic cylinder J, whose piston moves a rack in gear with the wheel K, which again forms a nut on the screw M. Supposing it be required to raise F to admit the mould, the piston J is moved so as to turn K, and with it M, thus releasing nuts GG, and moving them upward to a very small amount. Then piston J is locked in the new position. Next, the rams NN are raised, lifting F and also the screws MM through wheel K, which is now a fixed nut. MM thus revolving, the nuts GG are moved upward at the same rate as F. When the proper height has been reached, the plunger J is moved back to its original position, bringing nuts GG on to their seats to receive the upward thrust.

The ingot mould consists of iron rings SS, in two concentric sets, within which are placed blocks of firebrick TT, and a lining of ganister. At each end, ring plates UU are fixed, to hold the bricks in place, and the open mould is covered with loose pistons QQ, again protected by fireclay slabs. When compression occurs, the plunger enters the mould by the rising of the latter, and the gases that escape through the bricks pass upward or downward, finally leaving by the holes in plates UU. A very high intensity of pressure is absolutely necessary, less than 15 or 20 tons per square inch being very doubtful policy. The press shown can exert a total pressure of 10,000 tons. (*See third preface.*)

P. 82. **The Basic Steel process,** known also as the 'Bessemer-Basic,' was introduced by Thomas and Gilchrist in 1886 for producing steel from phosphoric pig, which had previously proved useless for steel making. Its success is due to a magnesia lining to the converter, obtained by crushing dolomite or magnesium limestone that has been previously dried, mixing it with tar, ramming it as a lining, and heating to 'coke' the tar. When this 'basic' lining has been heated, 14 to 20 % of the charge weight is thrown in as burnt lime, after which the pig is

Digitized by Google

added, and the 'blow' proceeds till the iron is free of carbon; the 'after-blow' then takes place till the phosphorus is eliminated. The converter is now slightly tipped, some ferro-manganese

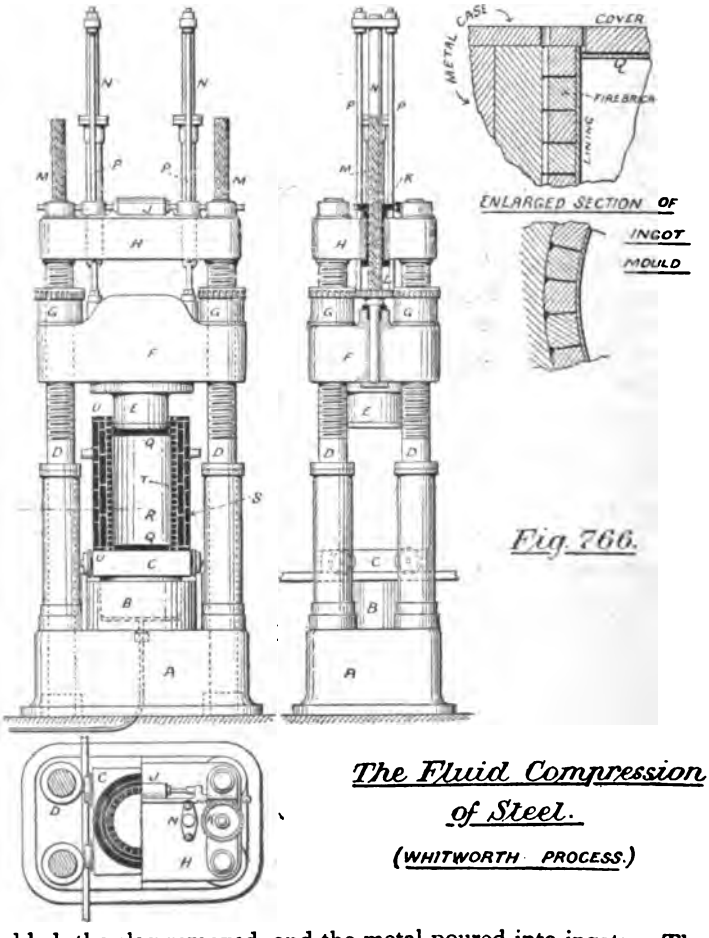

Fig. 766.

The Fluid Compression of Steel.

(WHITWORTH PROCESS.)

added, the slag removed, and the metal poured into ingots. The percentage of silicon and sulphur should be very low, and there should be from 1 to 2 % of manganese. If this be followed, the

Digitized by Google

resulting product, basic steel, is the nearest possible thing to metallic iron. Finally, in the

Acid-Bessemer Process	Silicon supplies heat for conversion	Phosphorus must be low
Basic-Bessemer Process	Phosphorus supplies heat	Silicon must be low
Open-Hearth Process.	Heat supplied artificially.	Suitable for intermediate pigs, with, say, ·2 to ·5% Phosphorus.

and the Basic process is chiefly of value on the Continent, where phosphoric ores abound.

P. 83. **Temper of Steel,** or the proportion of carbon to suit it to a particular purpose. The following table is the result of actual analyses of Siemens' steel, extending over some three or four years, and may be looked on as reliably representing present-day practice. It shows the gradual tendency to decrease carbon percentage, except in regard to steel used for cutting tools:

TEMPER OF STEEL.

		Percentage of Carbon.
Castings	Locomotive wheel centres, locomotive firebox girders, marine stern frames, &c.	·3 to ·4
Forgings	Crank pins, crank shafts, connecting rods	·25 to ·3
	Piston rods to stand wear	·35
Chains	To weld well	·15 to ·18
Springs—laminated		·4 to ·6
Boiler plates—ordinary		·17 to ·2
Boiler plates—for welding		·15 to ·17
Tool steel		1·7

The percentage in Bessemer steel is somewhat lower, if the same strength is to be retained. Wrought iron, also by analysis, contains from ·25 % of carbon down to mere traces.

P. 84. **Electro-deposited Copper.**—Ever since the discovery of electro-metallurgy it has been known that purer copper could thus be obtained, but the metal proved insufficiently dense, and very weak. These difficulties have been overcome by

Digitized by Google

Mr. Elmore's process, which is principally used for the making of pipes. An iron mandrel is placed in insulated bearings in a solution of copper sulphate, and a number of unrefined copper bars placed round it some distance off. The mandrel is connected to the negative pole, and the bars to the positive pole of a dynamo, and the copper is thus decomposed and deposited on the mandrel at a rate of about ·2 inch in 170 hours. At the same time a piece of polished agate presses on the mandrel, and travels slowly from end to end backward and forward, so as to cover the whole surface as the mandrel slowly revolves; the copper is therefore being burnished as fast as it is deposited, and is thereby made very dense and strong. When the pipe is sufficiently thick, the mandrel is taken off and steamed, which allows the pipe to expand so as to be easily removed. It is stated that copper pipes thus made are 50% stronger than those that are either brazed or solid-drawn, and have a superior ductility; while further strength can be imparted by rolling.

Manganese Steel is obtained by adding ferro-manganese to iron or low-carbon steel. The first attempt, with 2½ % Mn, at Terre Noire about 1885, resulting in a brittle metal, the experiments were abandoned; but later, Mr. Hadfield (1887), by pushing the percentage higher, obtained complete success. The results at various degrees are very curious, and are probably explained by the presence of carbon, which is inevitable.

Percentage of Mn.	Cast Manganese Steel.
1¼	: Produces no change if C be low.
3½ to 5	: Remarkably brittle cold, even with only 5% C, but not so when hot.
5½ to 6½	: About the same.
6½ to 7	: Strength and ductility increased; magnetic quality decreasing.
9 to 10	: Very ductile.
10	: If not very tough, can be improved by water quenching. Too hard for filing. Strength equals crucible steel.
12	: Entirely lacking in strength, no matter what the treatment.
13	: Practically non-magnetic.
14	: Maximum strength.

Digitized by Google

There is a rapid decrease in strength with any further increase in manganese. It should be noted that the carbon must be kept down to 1% in the 14% material, to do which the ferro-manganese should have about 82% of Mn. No doubt if the carbon could be sufficiently decreased, even 20 or 25% Mn could be added. The ingots are from 28 to 30 cwts., and the ferro-manganese is added in a molten state. Honeycombing is not bad, but the centre of the ingot 'pipes' considerably on account of the great contraction of this steel.

FORGED MANGANESE STEEL

Percentage of Mn. (Water quenched).

10 : Ductility equal to mild steel, strength much greater.
13 : Still higher strength and ductility.
14 : Limit of manufacture: beyond this toughness decreases.

Finally, manganese steel is strong, ductile, and hard; free from blowholes, and more fluid than cast steel, but pipes badly, and requires good feeding gates to mould. Its hardness prevents machining or fitting, and grinding only can be adopted. The steel is suited to dredger pins and other articles subject to great wear; and is also useful for wheel tyres in conjunction with chilled brake blocks, causing great grip. The following is an analysis:

Carbon.	Silicon.	Manganese.
·85%	·28%	14·1%

and the strength and ductility are next shown:

Percentage Mn		Breaking Stress sq. in.	
2½ to 7½	Cast	3¼ tons	very brittle
2½ to 7½	Forged	25 tons	3% elongation
14	Water toughened	56 to 65 tons	38 to 50% elongation

(as against Basic cast steel: 22 to 27 tons: 26 to 30% elongation).

In the testing machine the material is semi-plastic from the commencement, showing permanent set with low loads.

Nickel Steel is a very valuable material, discovered about 1885, in the search for combined strength and ductility, which carbon alone is unable to give to iron. But when it is said that

Digitized by Google

1% of nickel increases the cost of the steel by one-third, the difficulties of introducing it commercially will be understood, so that though the percentage Ni might rise to 20 or 30 with advantage, the practical limit is 3 or 3¼, with which there is usually ·3 to ·4% carbon. The following list, from actual specimens. will show that hardness is due to the presence of carbon:

Percentage Nickel.	Percentage Carbon.	Quality.
2·05	·22	soft
2·62	·19	soft
3·1	·96	very hard
3·2	·54	medium hard
3·25	·16	soft
3·4	·31	slightly hard
4·95	·51	medium hard

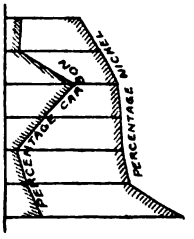

All these specimens welded well, and could be bent cold. As regards strength and ductility the following are from actual tests:

Use, &c.	Percentage Nickel.	Breaking stress tons sq. in.	Elastic limit tons sq. in.	Elongation per cent.
Boiler plates	3	35·7	22·3	25
Ship plates	3	37	26·7	20
No. 13 Ni Steel ...	2·05	37·8	—	31·5
Gun tube.....	—	41·6	26	21·2
Gun jacket	—	44·6	26·8	20·4
No. 14 Ni Steel (for propeller shafts)	3·35	45	33·5	27·5
Gun hoops	—	48·7	30·4	20·5
Wire ..... (easily drawn)	30	88·7	—	6·25

In other cases it has reached 40 tons breaking stress with 28 tons elastic limit, and an elongation equal to mild steel. Compare this with Forth Bridge steel at 30 tons breaking and 17 tons elastic, or the Eiffel Tower steel with 22 tons breaking and 16 tons elastic. In all cases the nickel steel has the same ductility as mild steel, but with 30% greater tenacity and 75% greater elastic

Digitized by Google

strength. It resists shock, is very uniform in structure, flanges well, and is less corrodible than mild steel. It is therefore suitable for shafts, propellers, ship plates, boiler plates, large guns, and lastly, when surface-hardened, for armour plates. Evidently the function of the nickel is to prevent the shortness caused by carbon, while permitting and even assisting the latter to exercise its strength-giving property ; it is, however, unable to confer hardness without the assistance of the carbon, but increases that hardening capacity.

The Harvey Process is applied to armour plate to give it such extreme surface-hardness as will resist the attack of shell. The process is essentially one of part cementation, or the introduction of carbon to a given depth, and has been practised in England by laying the plate on a shallow fireclay box filled with charcoal, luting with fireclay, and keeping at 2400° Fahr. for several weeks. As the plates weighed 30 or 40 tons each, the risk of breaking the boxes was very great. This objection is removed at the Bethlehem Steel Works, U.S.A., where two plates are hardened simultaneously, face to face, but with 8 ins. of charcoal dust between. They are then placed on supports within a furnace, thickly luted with sand and fireclay, and gradually heated up to 1700° Fahr., remaining at that temperature for 8 or 10 days, after which they are taken out and laid on supports in an empty tank, so as to keep them apart, and allow water pipes to pass between and around them. From these pipes a spray of ice-cold water is directed on the plates for about an hour, and the final cooling is done in an oil tank. The oxide on the plate surface is afterwards removed by a pneumatic chipping-chisel.

Armour plates are thus hardened to a depth of about 1¾ ins., and cannot be drilled or otherwise machined unless locally softened by an annealing process. For this purpose an electric current of large volume, from an alternating dynamo, is sent through the plate at the required place, heating it to 1000° Fahr. ; and the temperature is then let down gradually to a dull red, which is tested by the burning of a pine stick in contact with the plate. The electrical principle involved is exactly the same as that in the Thomson process of welding (p. 329), the dynamo providing a current of 100 ampères at 300 volts, which is changed

Digitized by Google

to 10,000 ampères at the plate, passing there through copper terminals ½ in. square, kept cool by water circulation. The current is very gradually applied, and very slowly shut off, by means of a rheostatic switch.

The value of nickel steel for armour plates is shown by the following figures, which prove a saving in weight of 43·8 % for equivalent resistance, over ordinary steel plates:—

Kind of Plate.	Relative penetration.	Relative resistance.
Soft Steel	2·20	·455
Compound Steel and Iron ...	1·75	·572
All Steel	1·64	·609
Nickel-Harvey	1·00	1·000

Chrome Steel is obtained by the addition of chromium to steel having about ·4% of carbon, and the resulting metal is not only extremely hard, but is 'self-hardening,' that is, it only needs to be cooled in a current of air after forging, to make it suitable for metal-cutting tools or armour-piercing shells. For the latter purpose the French Government use—

Carbon.	Chromium.	Nickel.
·4%	1%	2%

while other analyses give—

Carbon °/₀	Chromium °/₀	Manganese °/₀	Silicon °/₀	
·6	2·2	not known	not known	French.
·63	1·04	·05	·15	American.
·44	·92	·03	·12	American.

A 12 in. chrome-steel projectile has pierced a 16-in. armour plate, while a chilled chrome-steel armour plate has received a

Digitized by Google

17 in. projectile, fired with 8 cwt. of powder, the impression being but 1¼ in. deep.

Tungsten Steel (called also Mushet's Steel) is also a self-hardening steel, similarly suitable for projectiles and cutting tools and having a compositionby analysis of—

Carbon °/₀	Tungsten °/₀	Silicon °/₀	Manganese °/₀
1·36	2·58	·42	·25

Sterro Metal is a brass to which have been added small proportions of iron and tin. Its percentage composition is—

Copper...	... 55 to 60	Iron	2 to 4
Zinc ...	... 34 to 44	Tin	1 to 2

It is both cheaper and stronger than gun-metal. Speaking generally, the presence of iron reduces the tenacity, but in the proportions shown is of value. This metal has been used for hydraulic pumps.

Delta Metal, though its proportions are unpublished, seems to be simply Sterro metal in a forged or rolled condition. The mechanical treatment thus received considerably increases its strength, and it is much advocated for ship propellers. Though the presence of iron causes a slight rust, the loss after six months' immersion in an acid-impregnated water was but 1·2% as against 46% with wrought iron or steel.

Silicon Bronze is an alloy of copper and silicon, the latter acting as a flux or reducing agent, clarifying the copper and preventing oxide scale. The resulting product is very strong, as here shown:

Percentage Copper.	Percentage Silicon.	Breaking stress, tons sq. in.	Elongation °/₀
97	3	24½	55
95	5	33½	8

The second sample is deficient in toughness, and more than 5% silicon causes great brittleness. Adding ·1% of silicon to melted copper produces clean castings by removing oxide, and a little silicon to any brass or bronze is advisable. Silicon bronze

Digitized by Google

corrodes rather more than aluminium bronze, but is very close-grained, and therefore suitable for resisting fluid pressure.

Aluminium is procured from its ores by one or other of two processes. The older or Deville process has been much improved as the Castner process, and is thus practised at Oldbury, near Birmingham, being based on the displacement of aluminium from its ores by metallic sodium. Caustic soda and iron carbide are melted in furnaces at 1470° Fahr., and, thus being kept for some 1½ hours, the *sodium* distils over into iron condensers, and is afterwards cast into blocks of 2 lbs. each. Some 20 furnaces are kept going at once, each producing 60 lbs. of sodium per day, with an expenditure of 360 lbs. caustic soda and 300 lbs. iron carbide.

Next, *alumina* is prepared, by mixing the ground mineral (bauxite) with soda ash, and heating it in a furnace till silicate and soda aluminates are formed, after washing which, first with water and then with hydrochloric acid, the hydrate of alumina remains. This is mixed with common salt and charcoal into a paste, and made into balls, which are thoroughly dried and heated in earthen cylinders. While in this condition perfectly dry chlorine gas is passed over them, and *aluminium bichloride* distils over.

Lastly, 80 lbs. of the bichloride, 25 lbs. of metallic sodium, and 30 lbs. of cryolite (another ore of aluminium) as a flux, are heated together to 1830° Fahr.; and metallic *aluminium* to the weight of 8 lbs. is thereby produced, impure only to the extent of 2 %.

In the Cowles process the ore is directly reduced in electric furnaces, or rectangular fireclay pits kept hot by the current from an enormous dynamo. Each pole within the furnace consists of a bundle of five 3-inch carbons, having metallic caps or heads—of iron if ferro-aluminium is required, and of copper if for aluminium bronze. The furnace lining is made of lime and charcoal powder, the latter for localising the heat and saving the furnace materials. The charge consists of ore, metal (copper or iron as desired), and charcoal; and the resulting alloys contain 15 to 17% of aluminium.

Aluminium has only a third the specific gravity of iron, and is practically untarnishable. The addition of ½ to 1 % to cast iron

Digitized by Google

increases fluidity and makes casting possible with the whiter irons.

Aluminium Bronze, as a substitute for gold, has been long known, but has only recently been advocated as an engineer's metal. The best proportions are 5 to 11 % of aluminium, the rest being copper; and the strengths are, with

5% Al.	24·5 tons sq. in.. breaking.	40% elongation.
11% Al.	35·7 tons sq. in., breaking.	10% elongation.

If a small portion of silicon be added, the strength is increased but the ductility diminished. The 10 % alloy is much used for bearings, gear wheels. propellers, &c. Shrinkage when casting is very great, and good feeding gates are necessary.

Manganese Bronze has been mentioned at p. 85. The ferro-manganese usually added is objectionable as introducing iron, which decreases toughness and increases corrosion, so it is better to use an alloy of manganese and copper. One of the best and cheapest manganese bronzes has the following percentage proportions:

Copper	53	Manganese ...	3·75
Zinc...	42	Aluminium ...	1·25

In view of the competition between the bronzes for propeller construction, it may be noted that the relative cost for different metals is given by the subjoined figures:

Cast Iron ...	£24	Gun Metal ...	£130
Steel	£38	Manganese Bronze	£135
Delta Metal ...	£115	Aluminium Bronze	£145

Phosphor Bronze ... £170.

CHAPTER IV.

P. 98. **Steam Hammer Blow.**—For the benefit of some readers an amplification is here given of the matter on p. 98:—

Velocity due to tup weight = $\sqrt{2gH}$ (H = height of drop).

Acceleration due to steam = $\frac{\text{Total pressure}}{\text{mass}} = \frac{Pg}{w}$.

Digitized by Google

$\therefore$ Velocity due to steam $= \sqrt{2fH} = \sqrt{2\frac{Pg}{w}H}$

and Total Velocity $= \sqrt{2gH} + \sqrt{2\frac{Pg}{w}H} = 8\sqrt{H}\left(\sqrt{\frac{P}{w}} + 1\right)$

which value must be used instead of v on page 98.

Also $P = \frac{wv^2}{2gd} + w + P_s$ is more rigidly correct for mean total pressure, though the addition is only slight. Thus, a 5-cwt. hammer gives a blow of about 20 tons, half a ton of which is caused by P_s, the pressure of the steam.

P. 124. **Stamping.**—It is indeed remarkable how a difficult forging may be overcome by the use of top and bottom dies, and although the method has its limits, it may be pushed to very

Fig. 767.

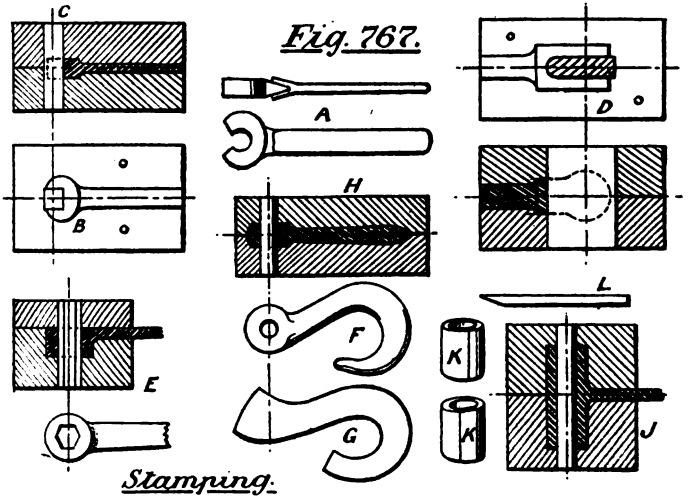

Stamping.

extreme cases, if we partly forge by hand and partly stamp under a hammer. The metal should always be roughly forged or welded to shape, however, before placing in the dies, so as to dispose the fibre in the best direction for strength. Some seven examples are shown: (1) The single-webbed crank, Fig. 121, needing no further explanation; (2) the centre for screwing stock,

Digitized by Google

C, Fig. 121*a*, which is first punched and roughed to shape, and then placed in suitable dies; (3) the spanner A, Fig. 121*a*, treated as in Fig. 767—that is, the jaw and shank are first scarfed and welded as at A, then placed in dies at B, and finally punched through at C before being removed; (4) the forked rod B, Fig. 121*a*, similarly rough-forged, and punched in dies as at D, Fig. 767; (5) the ring spanner E, Fig. 767, punched with a hexagonal punch; (6) the hook F, Fig. 767, first roughly bent as at G, and then stamped and punched as at H; and (7) the deep-eyed lever J, Fig. 767, first prepared by two rough rings K K, and a scarfed rod L, then placed in the dies and drifted as shown. Whenever welding is done in the dies, the pièces must be raised to a very good welding heat; *see* B and J, Fig. 767.

P. 125. **Steelifying Iron.**—This process is of the same character as case-hardening, and is practised by making a powder having 1½ oz. of prussiate of potash, ½ oz. potassic nitrate, and ½ oz. sugar of lead; placing it upon red-hot iron, and reheating till the powder melts. Brightening a small portion of the iron, the colour is watched for as in tempering, and the quenching done in rain water. It is claimed that the hardening is very thorough, and makes the material suitable for cutting tools.

P. 128. **Hardening Steel.**—The hardness produced in cooling steel depends very much on the rapidity with which the heat is removed. Water is a good cooler, and is most used, but much harder results are obtained by cooling in mercury, and the hardest known by means of lead; the point of the tool, after heating, being pushed into a block of cold lead.

Hydraulic Forging—Advocates of hydraulic pressure for heavy forging aver that steam hammers are done with, and that no more heavy hammers will be ordered. Yet hydraulic forging was used practically by Haswell in 1861, being proposed by Charles Fox in 1847, and many big hammers have since been built, proving that old prejudices die hard. At the same time it is fully conceded that the hammer blow merely compresses the exterior of the forging, and never satisfactorily reaches the centre, due evidently to the shortness of time occupied at each stroke. The advantage possessed by hydraulic forging would belong also

Digitized by Google

to any method that substituted a steady pressure for a blow, only that its rigidity makes water the most suitable medium. It is not, therefore, introduced on account of its storage qualities, and in fact the use of an accumulator or any possibility of a blow is disallowed at once. In most forging presses, then, the source of power—steam—lies near the press, and the water is merely a connection from there to the ram cylinder. The sole advantage of the system is that time is given for the metal to *flow* right through the forging thickness, and that this is no chimera, the statements of most celebrated engineers admit no doubt of.

Apparently hydraulic forging was suggested by Whitworth's compression of the fluid steel, and by the objection of his neighbours to the hammer noise; but it is doubtful whether the first practical press was due to Haswell, or to Gledhill, Whitworth's manager. Fig. 768 is a plan of Haswell's press, the steam piston

Hydraulic Forging Presses

Fig. 768.

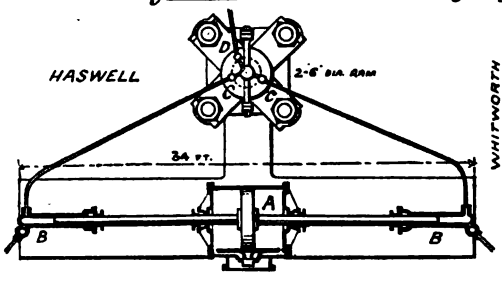

Fig. 769.

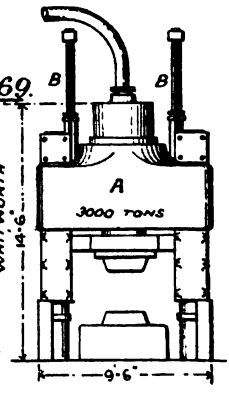

A being connected directly to the pumps; B B are non-return admission valves, and C C delivery valves, worked by powerful levers from an auxiliary steam cylinder. The piston travels a whole stroke in either direction alternately, valves C C being opened or closed as required, and the water is exhausted through a fifth valve, D. A smaller hydraulic ram placed above the main one serves to lift the latter by means of links. Whitworth's press is fed directly by steam-driven pumps, though the lifting rams are worked from an hydraulic accumulator, and his apparatus is easily

Digitized by Google

understood from Fig. 769, A being the main cylinder and B B the lifting rams.

Both methods have since been adopted satisfactorily, and two things have to be noted: (1) that immense rigidity of framing is required on account of the heavy pressures, 2 or 3 tons per square inch, and (2) that the difficulty of keeping valves and packings water-tight causes some makers to dispense with the former altogether. A very useful modern press, designed by the late Mr. Tweddell, is shown at T, plate XV, facing p. 318, where the absence of pillars is a convenient arrangement.

Cold drawing of metals has long been practised in the manufacture of wire from more or less plastic materials, a hard

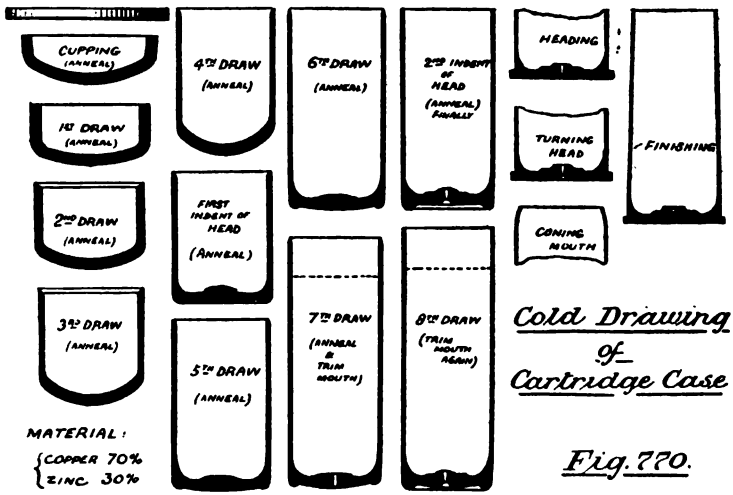

steel plate being drilled with a series of holes of gradually decreasing size, through which the material is passed in succession from largest to least. The principle is also applied to plates of the same materials, which are stamped by a regular series of dies until the required shape, often much removed from the original condition, is attained. Between every 'draw,' or nearly so, it is usual to anneal the work, for such forced flow of material produces

Digitized by Google

brittleness. The steel cylinders now used for storing compressed gases are thus made in one piece; so also are boiler tubes and cartridge cases. The last-mentioned have become of large size since the introduction of the quick-firing gun, and very heavy presses are therefore employed, the operations at Woolwich in drawing such a case for a 6 in. quick-firing gun being shown in Fig. 770, as described by Sir William Anderson before the Institute of Mechanical Engineers in 1897.

Metal-spinning is a method of moulding thin flexible metal sheets upon wood blocks fixed in a lathe chuck, by means of a wooden tool or presser. In this manner knobs, teapots, and many other domestic articles can be built from spun hemispheres or saucers.

CHAPTER V.

P. 152. **Lathe Centres.**—The American practice is to use an angle of 60° for work up to 15 ins. diameter (7½ in. centres),

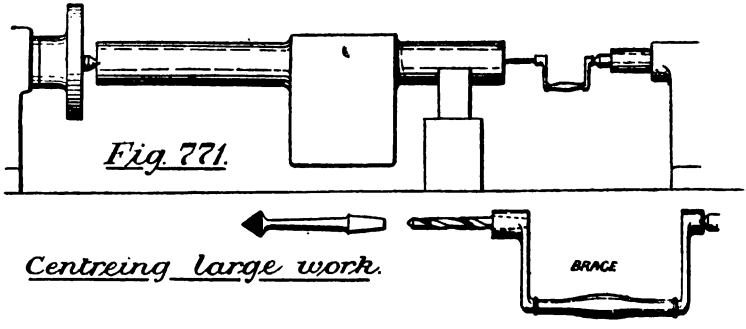

Fig. 771.

Centreing large work.

and 70° to 90° when above that diameter. Mr. W. H. Pretty, Wh. Sc., of Bedford, writes that an endeavour there to use 75° for small work (up to ¾ cwt.), and 80° for larger work, met with failure through the changing from one machine to another, and a general standard of 80° was therefore adopted. For work above ¾ cwt. he drills the ends with brace and bits, as in Fig. 771, by placing it on supports in line with lathe centres, and giving a

Digitized by Google

feed by advancing the poppet screw; the plain drill being first used, and the countersink afterward.

Centreing Machine.—This is a simple but useful contrivance for rapidly preparing work for the lathe. The work is rested in a concentric chuck A, Fig. 772, and a V support B; the

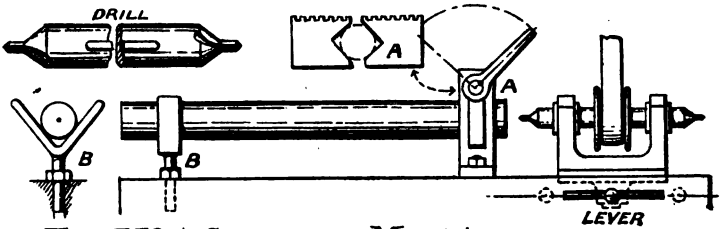

Fig. 772. Centreing Machine.

latter being raised or lowered till the bar is level. The drill, rotating rapidly, is now advanced to the work by the lever, and the countersink and plain hole both drilled at one time by means of the special drill-point shown.

Centre-grinding Wheel.—The common method of trueing up lathe centres is to soften them by heating, turn them up, and

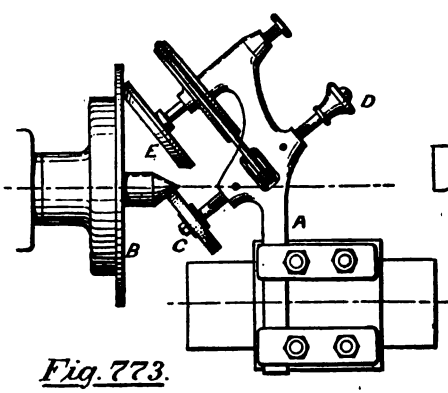

Fig. 773.

Centre-grinding Wheel.

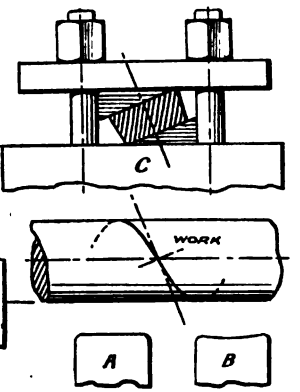

Fig. 774.

Digitized by Google

then re-harden. Fig. 773 shows a handy emery wheel for trueing up without preliminary softening. The shank A is fixed in the slide-rest so as to let a vulcanite wheel E roll upon disc B fastened to the catch plate, and the emery wheel C to just touch the centre point. The knob D, loose on the spindle, is now taken hold of to traverse wheel C, and the lathe mandrel is revolved, the connecting band between spindles E and C being a long helical spring.

P. 157. **Water-finishing Tool.**—If a high and smooth finish is to be given to iron or steel, a broad, sharp tool is used, and plenty of water fed to its point while tooling. Quick speed and large feed are also supplied, and the tool-points are shown in Fig. 774—A for a planer or shaper, and B for a lathe. The latter form can be understood by remembering that the relative path of tool to work is that of a screw, while the tipping of the tool at C permits its front to lie normally with the direction of travel.

P. 160. **Face Lathe.**—To give a clearer idea of this machine, a general drawing is provided in Fig. 775. The driving details have already been described for the break lathe, and the slide-rest needs no further description. The only point of difference lies in the bed, which, it will be seen, admits large diameters having small axial width. It is thus a *surfacing* machine.

P. 160. **Classification of Boring Machines.**—A short classification will give a better understanding of the many types of these machines. Thus, we may have:

1. Boring in the lathe: with moving work.
2. Special boring machine of lathe pattern.
3. Horizontal boring machine: with fixed work.
4. Vertical boring machine.
5. Snout-boring machine, for blind holes.

Lathe boring has been described at p. 160; but as universal tools are inadvisable, most machines being kept going with one class of work, it is better to construct a special machine (Class 2) of 'lathe-boring' pattern, than to do much boring in the lathe

Digitized by Google

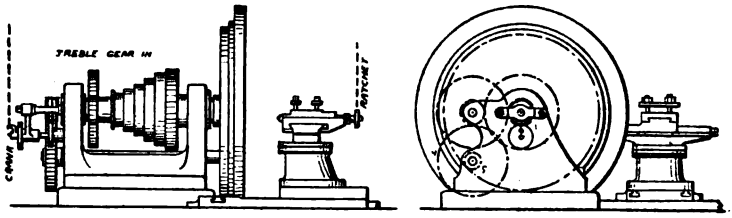

Fig. 775.

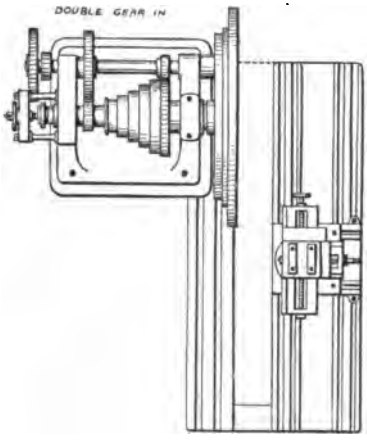

Face Lathe.

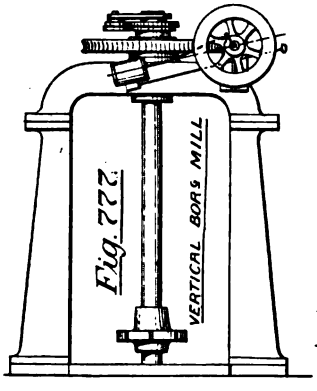

Fig. 777.

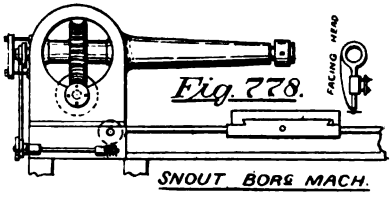

Fig. 778.

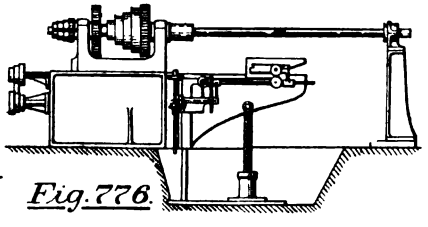

Fig. 776.

Boring Machines.

Digitized by Google

itself. Such a machine is useful and expeditious, if the work be not too heavy, and is illustrated in Fig. 776 by an example from Loudon Bros. of Johnstone, N.B. Some makers use two lifting screws when doing heavy work, and others support the boring bar on the saddle, as in Fig. 249, p. 237; but the main characteristics remain, such as deep bed and short length, and the movement of the work itself for feed.

Class 3, with fixed work, is well described on p. 161.

The fourth class, the vertical machine, has already been mentioned, and its advantages, truth of surface for large diameters, explained. The general design is shown in Fig. 777, the construction being similar to those of Class 3, where the work is fixed and the tool fed along the bar by an epicyclic train of wheels at the upper end. Of course, the bar must be lifted vertically when removing the work, but there is less risk of accident than with the horizontal machine.

The snout-boring machine, Fig. 778, is made by Messrs. J. Buckton & Co., for cases where a bar cannot be passed through the work. Very large diameters cannot well be done, but most hydraulic cylinders can be conveniently bored. The driving is by worm gearing, and the feed is giving to the saddle on which the work is bolted, lathe fashion. A facing head is also supplied.

P. 168. **The Slot-drilling Machine.**—Fig. 779 shows one

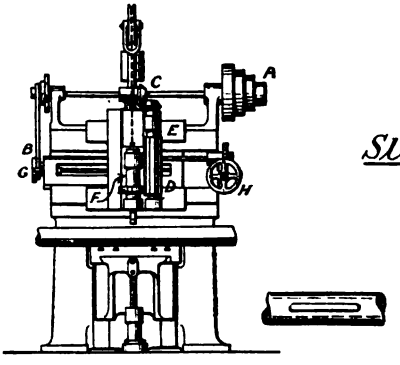

Fig. 779.

Slot-drilling Machine.

of these useful machines, to Messrs. Buckton's design. It is driven by speed cones A, from a countershaft, in order to make

Digitized by Google

surface speed constant for various-sized drills. The horizontal feed to saddle E is given by the gear on the left at B; and the driving gear consists of mitre wheels C and a long Marlborough wheel D, thus permitting the tool to be set to any arranged depth. The slide F, carrying the tool spindle, may be adjusted to give the depth required, by means of spindle G, upon which is a small pinion gearing into a rack on the back of the slide. The table has the usual setting adjustments, and a hand feed is supplied at H. The form of drill is shown at J, which first makes a hole of the proper depth, and is then traversed horizontally; but if the slot be very deep the work must be done in stages.

P. 175. **Notes on Milling.**—When work is being fed to a milling cutter, the direction of motion of the work must be the reverse of that of the cutting tooth. If this precaution be not taken, the cutter will ride upon the work with great pressure, and its teeth be broken. Thus in the left view, Fig. 181, the work

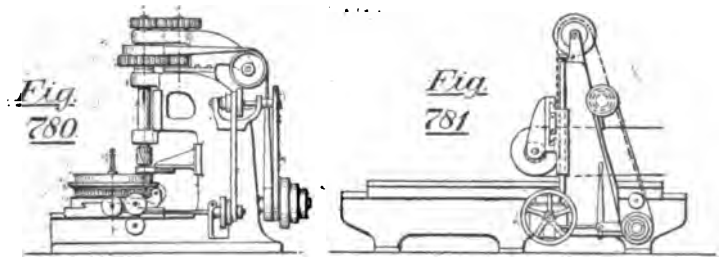

Fig. 780

Fig. 781

Heavy Milling Machines.

should be fed from left to right. Further, when using a helical cutter, Fig. 181, the direction of helix must be such as to force the cutter on and not off the spindle.

Heavy Milling Machines.—Milling is being more and more adopted for repetition work. The mechanism of the Maxim gun, for instance, is all but automatically turned out, by milling machines of the pattern on Plate XII., intricate wavy sections being cut by *gangs* of mills, or several cutters strung on one spindle. A not less interesting development is that of the heavy

Digitized by Google

milling machine intended to directly supplant planers, shapers and slotters, even for ordinary unrepeated work. Over and over again has it been proved that this can be done with economy despite renewal cost of mills, while the finish of the work is undoubtedly better. Fig. 780 is a vertical machine to do slotting machine work, and the horizontal machine Fig. 781 similarly serves for planed work; the table movements giving feed in both cases, and not cut.

Special Copying Machines.—The copying principle has an extreme illustration in such apparatus as the *copying lathe* and the *profiling machine*. The former was the invention of Blanchard, an American, and was used by him to make such articles as shoemakers' lasts, gun-stocks, &c. It is still much adopted for 'turning' the spokes and felloes of wooden wheels, and its principle will be understood from Fig. 782. There are two fixed headstocks, A and B, and two corresponding poppet heads. In B is placed a cast-iron copy, say a spoke, and in A a rough piece of wood. A sliding carriage C carries a roller D and a fly-cutter E of equal diameter, the latter being driven at high velocity by means of a belt. The roller D is pressed against the copy by the pull of weight F on the carriage, and the fly-cutter gouges out the wood in imitation of the copy. The feed must also be given. This is obtained by a *very slow* rotation of the mandrel B, which is communicated to the second mandrel through the idle wheel G, and as the roller D is moved backward or forward, the same movement occurs on the cutter E, so that the copy is accurately reproduced at any section, whatever its shape. At the same time a slow traverse is given to the carriage along the bed, thereby including all sections of the work.

The profiling machine is similar in character, but is arranged vertically, and is used for metal-cutting, its progenitor being retained for woodwork. Referring to Fig. 783, A is the copy, B the work, C the milling cutter, and D a 'dummy' to traverse the copy, the carriage E being pulled leftward as before. An enlarged view of the dummy at D_2 shows the cone shape which is required to gradually increase the depth of cut, by refixing at a lower position after each traverse. The bed is long, and similar to that of a planing machine, the feed being caused by a slow movement

Digitized by Google

of the table, as in milling machines. Flat connecting- and coupling-rods are good examples of the work done.

Fig. 782.

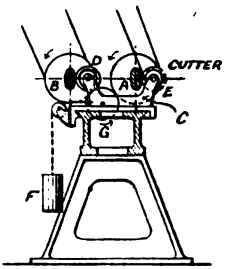

Copying Lathe.

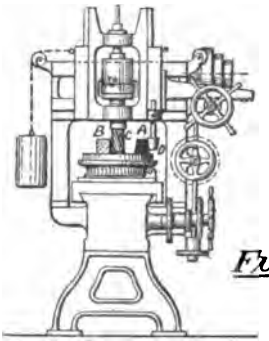

Fig. 783.

Profiling Machine.

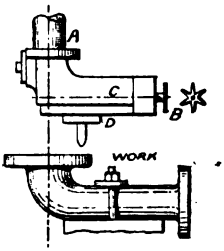

Fig. 785.

Facing Head.

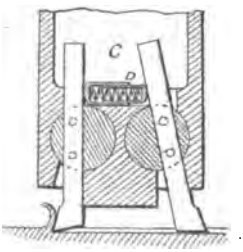

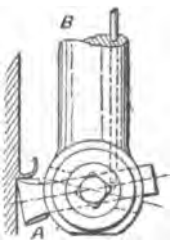

Fig. 784.

Reversible Tools.

Reversible Tools.—The endeavours of early manufacturers to increase the efficiency of reciprocating tools by making them

Digitized by Google

cut on both strokes have not been highly appreciated by users. Whitworth used a circular tool-box to his planing machines, and the tool-point was automatically moved through 180° after each stroke by cords and pulleys, much as the plate-planer tool is now moved (see C, Fig. 285, p. 295). Lack of rigidity caused the abandonment of this tool for good machines, however. Two recent double-acting tools, by Messrs. J. Buckton & Co., are shown in Fig. 784. The tool A is suited to a slotting machine, and is automatically reversed by rod B, on which are tappets. The main difficulty here, and whenever *one* tool has two edges, is the difficulty of sharpening symmetrically. The planing tool-box C is an improvement in this respect, for both tools can easily be set at their proper heights. The tools are fixed in slots made in discs, so that when one tool is at work the other trails on the return, the spring D keeping the acting tool to its cut. Both arrangements are said to work very well in practice.

Facing Head.—Small articles such as pipe flanges are very economically surfaced in a drilling machine by adopting a facing head as in Fig. 785. It is fixed to the spindle by a coned shank and collar as usual, and a radial feed is given to the tool-box D by the star B and screw C, the former striking a fixed projection at every revolution of the spindle.

CHAPTER VI.

P. 200. **Turret-head Lathe with vertical Mandrel.**—The special tool shown in Fig. 785*a* is called by its designers, the Richards Machine Tool Co., a 'Universal Turning Machine,' but is apparently better described as above. It may be understood by a reference to the description on p. 200. The mandrel is supported on a footstep, and driven by worm gear, and there are two vertical slides corresponding to a lathe saddle and slide rest. The turret is shown provided with tools for turning piston rings from a cylindrical casting, for which purpose *a* turns the top, *b* roughs the thickness which *c* finishes, and *d* parts to correct width. For the last operation the tools are gradually fed through the work by turning the hand wheel *e*.

P. 212. **Originating a Surface Plate.** — Mr. W. H.

Digitized by Google

Pretty, Wh. Sc., finds it possible to save much time and labour when originating surface plates or straight-edges, by giving the workman a tabulated statement of the order of procedure, so arranged as to systematically reduce the errors of manipulation. The plates having been stamped with numbers, (1), (2), (3), in conspicuous places, and the planing-tool marks eliminated with a smooth file, he follows this order :

(*a*) Using (1) as a standard : bed (2) to (1); bed (3) to (1); then bed (2) to (3), working equally on each.

(*b*) Using (2) as a standard: bed (1) to (2); (3) is already bedded to (2); then bed (3) to (1), working equally on each.

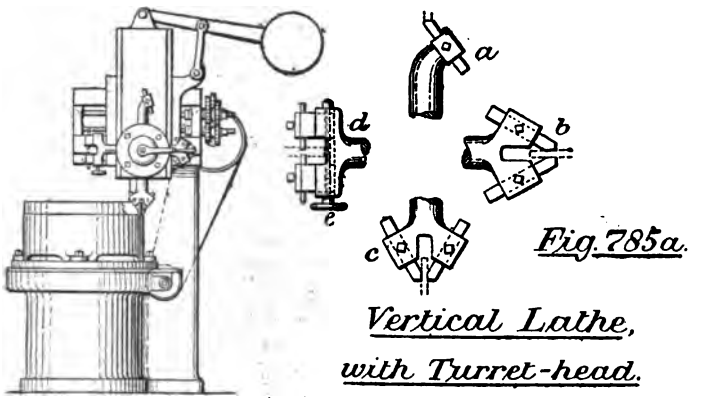

Fig. 785a.

Vertical Lathe, with Turret-head.

(*c*) Using (3) as a standard: bed (2) to (3); (1) is already bedded to (3); then bed (1) to (2), working equally on each.

(*d*) Using (1) as a standard: bed (3) to (1); (2) is already bedded to (1); then bed (2) to (3), working equally on each.

This cycle of operations is repeated until sufficient accuracy is attained. When straight-edges are being trued up they should be occasionally reversed end for end, so as to eliminate all possible errors.

P. 214. **Screw-cutting.** — There are no fewer than five

Digitized by Google

ways of cutting a screw-thread upon a spindle, which may be thus enumerated:

(1.) Cutting with *stock and dies* as described at p. 192. This principle is defective, for reasons there mentioned. The corresponding socket is screwed with *taps*.

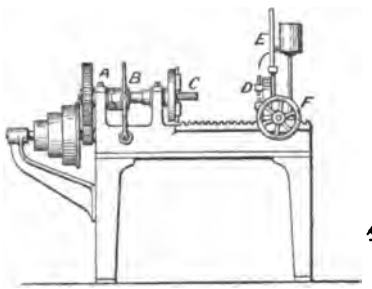

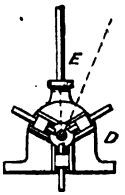

Fig. 786.

Screwing Machine.

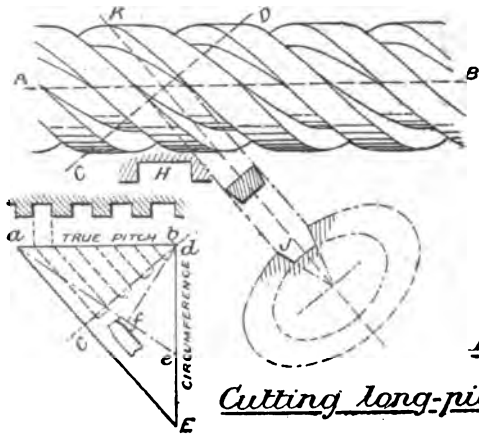

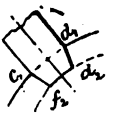

Fig. 787.

Cutting long-pitched screws.

(2.) Screwing in the *lathe*, described at pp. 147, 212, and 484. This is the only method giving a perfect screw, except that next mentioned, and is really equivalent to scale copying.

(3.) *Copying* is generally performed in a turret-head lathe as at p. 200, but is also shown at 47, Fig. 317, p. 349, for screwing stay tubes. The copy is often of a larger scale than the work.

(4.) By *Chasing* only. On p. 212 the chaser is described as

Digitized by Google

a finishing tool, when cutting screws in the lathe. It is, however, sometimes used both to start and finish the thread, being held by the hand throughout the operations. It is easily seen that such a method has precisely the same objections as stock and dies, but even to a worse extent, for 'drunken' threads, of varying pitch, are often produced by inexperienced workmen. This is because the tool has very short directing surface, even though that surface may have the correct angle.

(5.) By *Screwing Machine.*—This method is the same in principle as stock and dies, and is merely a quicker and more automatic way of doing the same work. In Fig. 786 the general form of the machine is that of a short lathe with fixed headstock A, a clutch B for putting the mandrel in and out of gear quickly, and a powerful driving gear. The work is held in a concentric chuck C, and the screwing dies are in themselves a sort of concentric chuck, operated by the lever E. The mandrel being revolved, the cutting head D is brought over the work by the pinion and hand-wheel F until the dies are in position to start: the lever E is then pulled leftward by the advancing cutters, being partly helped by the workman's hand at E. The operation may be repeated until the stud is of correct diameter, as indicated by the angle of the lever E. With plenty of lubrication the thread may be cut during one traverse, and when the dies are blunted they can be recut upon a master tap placed in chuck C.

Cutting Long-pitched Screws. — When the thread angle becomes 45° or over, it may be questionable policy to cut it in a lathe. Remembering that a screw is formed by an axial traverse and a rotation, either motion may be called the *cut*, the other being the *feed*; but the latter should always be preferably the slower or smaller motion. Thus, in the machine for rifling guns, the traverse being large and the rotation small, the tool is propelled axially, the holder being a long bar with the tool secreted in the end, in the manner known as the 'tiger's claw.' from the fact that it is sheathed on entering, and automatically shot out on the outward or cutting stroke. During withdrawal the tool bar is rotated by a rack and pinion, the amount of rotation being fixed by the inclination of a bar along which the rack arm travels. In such manner any long-pitched screw may be cut.

Digitized by Google

But whatever machine may be adopted, there are some general rules that apply to every case, though more particularly if the angle be great or the pitch large, for then any deviation from rule is more apparent. Imagine a screw A B, having, say, four threads wrapped round its elememtary cylinder. The combination of cut and feed will cause the work to travel under the tool in the direction K J, and the tool front must therefore be set normal to this line. The section at H will not show the real shape or width of tool, but that at J, which is taken across the line C D. The comparison of the two may be shown by a diagram : thus, if *a b* be the true pitch, over four threads, measured axially, and *d* E the outside circumference, *c d* will be the pitch measured normal to the threads. By setting out the threads on *a b*, and projecting them on *c d*, the true width of tool at thread top may be found,

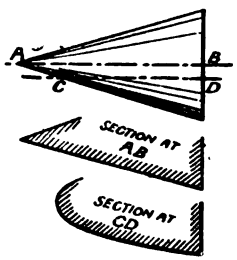

Fig. 788.

Incorrect Taper-turning.

as at $c_1 d_1$. Again, by making *d e* equal to circumference at thread bottom, we have *f d* as the normal pitch upon which the threads are to be again projected from *a b*, giving $f_2 d_2$, the width of tool at thread bottom. Finally, the curvature of tool point will be that due to the ellipse obtained as section on line C D. The same rules apply to broad traversing tools for plain lathe-work, so far as curvature of tool and angle of path is concerned.

P. 226. **Incorrect Taper-turning.** — When cylindrical work only is being turned, the *correctness* of the cylinder is not in the least marred by the height at which the tool is set, though the beauty of the surface may be very much affected. But the turning of a tapered surface or cone requires special care in this respect, and it is of the highest importance that

Digitized by Google

the height of the tool point should be exactly level with the centre line of the work; for the section A B of a cone, Fig. 788, through the axis, is a triangle, for which a straight-line feed would be suitable, but the section at C D, below the axis, is a hyperbola, and a straight-line feed would simply produce a reversed hyperbola instead of a true cone.

P. 249. **Tooling Circular Arcs.**—The methods of tooling arcs of large radius may thus be classified:—

1. Milling or slotting, with hand feed.
2. Milling in a profiling machine having a curved copy.
3. Special milling apparatus, p. 752, using a property of the circle.
4. Planing on a pivoted table controlled by a rod equal in length to arc radius.
5. Turning on a large face plate in a vertical lathe, whose short mandrel is sunk in the ground.

Numbers 1, 2, and 3 have already been described. No. 5 is practised at Woolwich on racers or roller paths of large radius. But as large arcs are not often required, it is better to fit up a planing machine in the manner shown at Fig. 789, where two

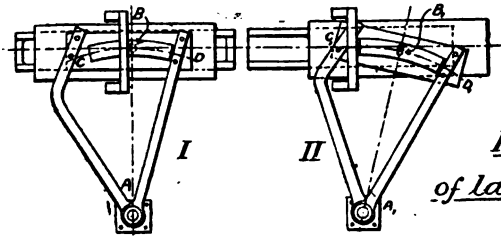

Fig 789.

Planing arcs of large radii.

positions are given. Taking position I., let a line A B be drawn immediately under the tool point, and let a stud B be fixed to the table. Next, let a triangular frame A C D, one side of which is the small table C D, be pivoted on stud B, and further pinned at A; the hole in C D being slotted to permit the planing table to travel. The work to be planed is now fastened to C D, and the planing commences; then, by referring to position II., it will be found that the curve C D, struck from A, will always lie under the tool point whatever the table position.

Digitized by Google

P. 256. **Turning Balls.**—Brass and gun-metal balls are much used for feed-pump- and safety-valves on account of absence of sticking which they ensure. To turn them in the lathe, a cup chuck in hard wood—A, Fig. 790—is provided, into

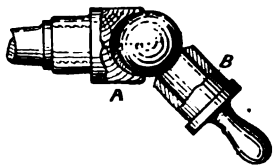

Fig. 790.

Ball turning.

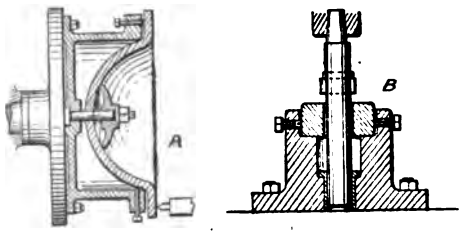

Fig. 791.

Jigs.

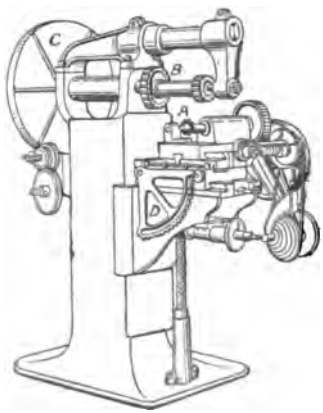

Fig. 792.

Automatic Gear-cutting Machine

which the ball is fixed. This form of chuck permits the work to be constantly changed in position; and, if this be carefully done, it will be clear that any section will be a circle, which is

Digitized by Google

the only requirement in a true sphere. After the ball is made as perfect as possible with the usual turning tools, it is finished with the tool B, made from steel tube, which is rocked to and fro as the lathe revolves, the ball being often removed.

P. 274. **Jigs.**—These appliances may be constructed so as to hold work for other operations besides drilling bolt holes, and Fig. 791 shows two arrangements—A being a special chuck for holding a dome cover while turning, and B a vice for supporting a loose collar for boring.

Cutting Wheel Teeth.—The formation of the teeth of wheels, either on paper or in the workshop, has been mentioned at various places in this book as follows:—

Kind of Tooth.	Patterns.	Moulds.	Cutting in Metal.	Describing Teeth Curves.
Spur	p. 60	p. 31	pp. 175 & 180	pp. 510 & 517
Bevel	p. 60	p. 31	pp. 256 & 753	p. 519
Worm	p. 58	p. 10	p. 274	—

A few more words on this very important subject will not be out of place.

Spur-wheel Teeth.—A milling cutter is always used to remove the interspaces, but the 'blank' to be cut may be mounted in one of various ways. On p. 180, the dividing heads are used for support, but this method is only suitable for small diameters. When wheels of large diameter form the regular work of a shop, special machines are adopted; in many cases so constructed as to automatically rotate the wheel through the pitch arc after every cut. Such a machine is shown in Fig. 792, elaborate but effective, where A is the cutter, B the work, C the dividing wheel, and D a sector for tilting the table to suit bevel gears.

Yet another method, shown in Swasey's machine, Fig. 793, is based on the fact that if a number of wheels be cut so as to each gear with a given rack, they will all gear the one with the other.

Digitized by Google

The 'rack' is represented by the gang of cutters A, which simultaneously rotate and travel slowly in an axial direction. While cutting takes place, however, the blank is also rotated on its own axis, by means of change wheels, in such wise as to accurately roll upon the 'rack,' with no slip whatever. The consequence is, that the spaces cut out are not quite of the same shape as the cutter teeth, but are so widened that a real rack of the cutter section would roll perfectly with the wheel this cut. The axial traverse of the cutters is given by the fixed cam C, which gradually

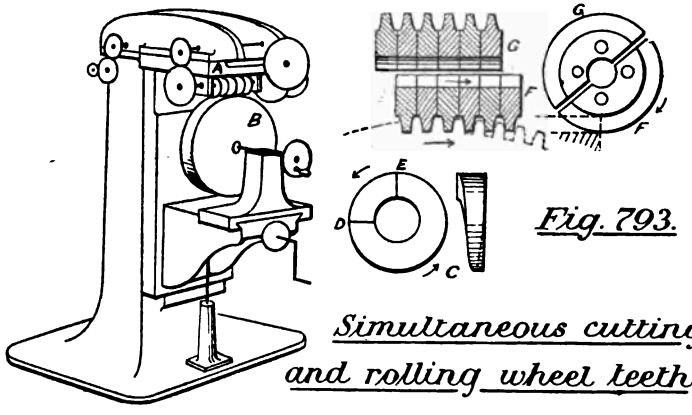

Fig. 793.

Simultaneous cutting and rolling wheel teeth.

thickens from D to E, through about three-quarters of a turn, and returns rapidly between E and D. Now the cutters are in halves, and while one set F is cutting, and *advancing* axially, the other set G, being out of the cut, is returning. The method appears complicated, but in reality is very simple, and the wheels thus cut will gear together most correctly, without backlash. By a more recent method, a single emery wheel, of correct section, rotates in one place while the wheel is really rolled along a line parallel to the grinding axis; and thus cast wheels may be trued up.

If a milling machine be not at hand, very good wheel-cutting can be done in the lathe. The lathe centres support a mandrel which carries the blank, and the milling cutter is fixed on a

Digitized by Google

vertical spindle which revolves in a bracket set upon the slide-rest, being there driven from a counter-shaft pulley overhead. The whole apparatus is seen in Fig. 794, where A is the blank, B the bracket, containing the cutter spindle C driven by the belt D, and E a dividing plate which gives the correct pitch turn through the worm wheel F.

Bevel-wheel Teeth.—It has already been explained at p. 753, that true bevel teeth can only be cut with a conical feed, and that milling cutters are useless except for approximations, or for roughing out before using an exact tool.

Worm-wheel Teeth.—These also are cut by many

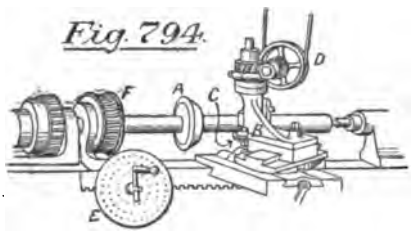

Fig. 794.

Wheel-cutting in the Lathe.

methods, which more or less approach accuracy. The simplest way, though by no means a good one, is to rough out the spaces with a milling cutter, as on p. 58, and then to apply the worm, as there shown, but using the file to trim down the thick portions of the teeth where marked by red ochre from the worm.

The second method is to use a *hob* (*see* p. 274). This tool is obtained by turning a steel worm of proper size and shape, cutting out milling teeth upon it, backing these off at top and sides for clearance angle, and finally hardening. Such a tool is highly expensive to make, and there is considerable risk when hardening; and unless finished with an emery wheel is likely to be untrue. Very few sizes can therefore be afforded, and wheels must be kept to standard pitch. Again, supposing the hob provided, there are still two methods of applying it. The spaces are always roughed out with a cutter, in order to save the hob, and the wheel being mounted freely on a stud, the hob is rotated while

Digitized by Google

being gradually brought into gear with the wheel. Usually the wheel is not turned round automatically, and then the hob has to do the double duty of rotating the wheel and cutting the teeth. The fault of this method is precisely that of stocks and dies in screw-cutting, for the worm thread has a different angle at the top to what it has at the bottom. Better results are obtained by

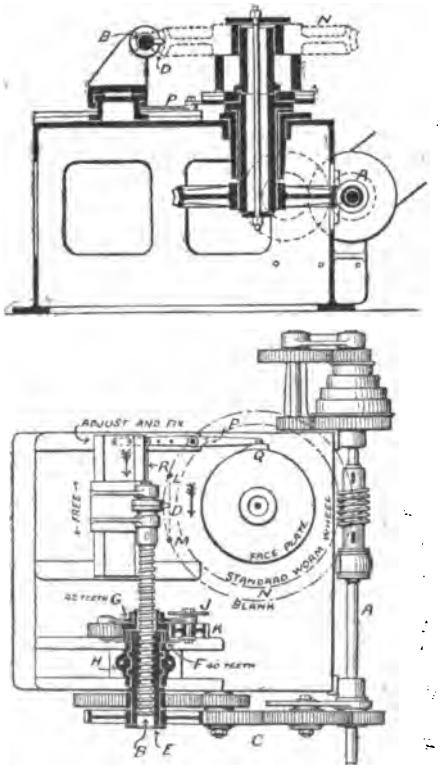

Fig. 795.

Cutting and forming Worm-wheel teeth simultaneously.

(MR J. H. GIBSON'S MACHINE.)

using a machine like a short lathe, and mounting the wheel on a vertical shaft passing through a fixed saddle, while the hob is driven between the lathe centres. The wheel shaft is then rotated at the proper velocity regarding the worm, by means of change wheels.

Digitized by Google

The machine in Fig 795 was described by Mr. J. H. Gibson, in a paper read before the North-East Coast Institution in 1897. A is the driving shaft, connected to the cutter shaft B by change wheels, arranged to give the actual relative motion between the worm and wheel. The cutter D makes a purely circular rotation, which, however, traces a helical cut on the wheel blank N. The shaft B is driven through nut E, wheel F, and wheel G, the latter riding on a feather key in the screw; but while cutting, all these pieces rotate solidly in the bearing H. Only *once* per revolution of the wheel blank N, the lever P is pressed out by the cam Q, bringing rod R forward, as shown by arrow, so that the star wheel J may catch R and cause wheel K to roll round G and F. As G has 42 teeth and F 40, these two wheels thus move relatively to one another, and the screw is shifted axially forward by the worm pitch. The blank being fixed on the face plate, and the lever P set just past the cam, the cutter is placed at L, and the machine started. The result of the various motions is to make a series of light cuts or scratches on the blank, marking out the interspaces; but, when N has turned round once, the lever P moves, and, as previously explained, the cutter takes up a new position on the helix of the imaginary worm. The cutting still proceeding automatically, the *same* grooves are simply cut a little deeper, and so the cycle of operations is repeated till the cutter emerges at M, by which time every interspace will have been completely finished; for the cutter, representing the worm, will have been presented in every one of its many positions, and the wheel will have been truly 'rolled' Finally the worm is turned, with the cutter as template, and of a pitch equal to screw B, of which various sizes are kept.

P. 277. **Standard Fits.**—Mr. Arthur G. Fuller has recently made very careful experiments to determine the proper *working fit* clearance, which should vary with the size of the object. As regards *driving fits*, the pin must be slightly larger than the hole, but the amount depends on the strength of drive required. *Force fits* require a still larger pin, but the size would again depend on whether the force applied were that of a lever, screw, or hydraulic press. The last-mentioned fits Mr. Fuller estimated from the average of all the experience he could collect,

Digitized by Google

and the results of his investigations are set out in Fig. 796 for working and force fits. Drive fits are to have from $\frac{1}{4}$ to $\frac{1}{2}$ the largeness given for force fits, the former for light drives, and the latter for heavy ones. The high and low gauges should be so

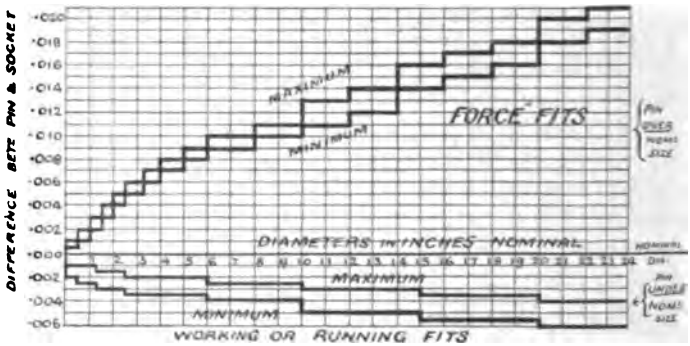

Standard Fits. *Fig. 796.*

NB. DRIVING FITS ONE-HALF FORCE FITS.

made that the clearance (or largeness) should always be within the maximum and minimum amounts shown, and the method is known as the 'limit' system. (For shrink fits *see* p. 842.)

CHAPTER VII.

P. 286. **Caulking,** if moderate, is not objectionable, but *split* caulking is as bad as it can be, and should be carefully guarded against. It consists of splitting off and then turning in at the joint a strip of iron about $\frac{1}{32}$ in. wide, and although it may stop a leak at the time, ultimately breaks out worse than ever.

P. 313. **Increased Pressure in Rivetter when closing.**—The pressure of water in a rivetter being 1500 lbs. per square in. at first, is increased by about 50% at the moment of closing the rivet or to about 2250 lbs. per square in.; the

Digitized by Google

cause being the sudden arrest of the accumulator weight and consequent absorption of inertia.

P. 330. **Electric Welding.**—There are four systems at present in use, the Thompson, Benardos, Zerener, and Voltex. The first is useful for wires or bars, heat being caused by their resistance, while the Benardos uses the arc, and is suitable to repairs generally, but both require large installations. The Zerener process avoids passing the current through the material, the arc between two carbons placed in line being deflected upon the work by means of electro-magnets. The Voltex system also adopts two carbons; but they are set mutually at about 45°, and magnets are unnecessary. Both the last-named systems are self-contained, being carried about with ease, and it is claimed that there is a saving in current of 30 % in the Voltex over the Benardos process. Also that the double carbon apparatus does not harden the parts so as to prevent machining, as in the other cases. The Voltex requires a current of 80 volts, with 120 ampères for welding, with 30 ampères for brazing, and with 5 ampères for soldering.

P. 332. **Setting for a Lancashire Boiler.**—This type of boiler not being complete without external flues, which also

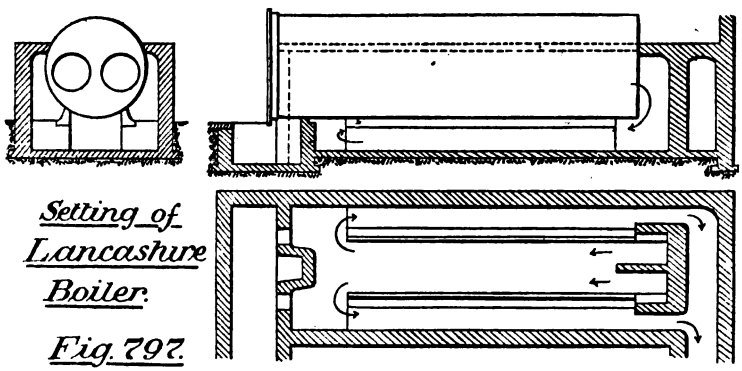

Setting of Lancashire Boiler.

Fig. 797.

act as boiler supports, sections have been shown in Fig. 797. The direction of draught is indicated by arrows: through the

Digitized by Google

furnace tubes, underneath the boiler, and returning along the side flues to the chimney. Where the brickwork touches the boiler it should be as narrow as possible to avoid corrosion or any unseen wasting, and should there be luted with fireclay instead of mortar. The whole setting is lined with firebrick and inclines slightly towards the front in order to drain.

P. 337. **The Field Boiler.**—This is principally interesting on account of the Field tube, which has been much applied where quick steaming has been required. The tube consists of an outer or blind member, A, Fig. 798, having water inside and

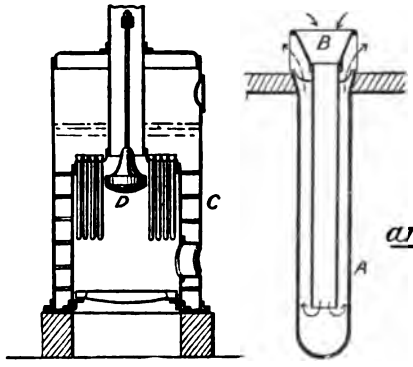

Fig. 798.

Field Tube and Field Boiler.

furnace gas outside, and the inner tube B is supported by feathers at the top, its funnel mouth entrapping the downward current, thus causing the upward current to ascend by tube A, and promoting the disengagement of steam. The boiler C shows the tubes in position, hung from the firebox crown, D being a baffle plate to retard and reflect the draught.

P. 339. **Water-tube Boilers** having been greatly favoured for certain purposes during recent years, a more extended account seems advisable. These boilers were tried in France as early as 1871, and have been used in the French Navy since 1874. In the meantime the Babcock-Wilcox boiler was introduced in various parts of the world. The necessity for a boiler for the English Navy suited to high pressures, combining light weight

Digitized by Google

with safety, and having rapid steam-raising properties, created the Thornycroft and Yarrow boilers, at least for the smaller boats; after which the Belleville boiler (originally introduced for French boats in 1879) was naturalised in England for the larger ships. Meanwhile, the simultaneous development of the cylindrical or 'Scotch' marine boiler proceeded, and now it is a question which is to hold permanent ground. The consensus of opinion seems to be in favour of retaining the Scotch boiler for passenger and cargo service, but especially for the latter, while the special advantages of the water-tube boiler fit it for war vessels. On land, the high efficiency of the Lancashire boiler and its steady steam-supplying properties make it a difficult rival: neither is it necessary to save space or weight on land. Taking now the water-tube boiler alone, we may class its advantages:

ADVANTAGES OF WATER-TUBE BOILERS.

1. Will give higher pressure steam than cylindrical boilers.
2. Repairs, though probably more frequent, are easily made.
3. Steam can be raised more quickly from cold water, there being little risk of deformation.
4. Circulation is *systematic*, rising by the tubes, and returning by 'downcomer.' Circulation, however, does not increase rate of evaporation, but the reverse: its function is to keep steam moving and avoid dry plates.
5. Lighter than other boilers for same power, because *heating* surface is largely *containing* surface as well, whereas a separate (and heavy) envelope is required for the latter purpose in other boilers. Also heating surface is lighter per square foot than in many other boilers.
6. Less space for same power.
7. Safer at high pressures. This, however, is dependent on good circulation and on a fairly small steam reservoir.
8. Portability: can be carried about in sections and fitted up afterwards.

The disadvantages of this boiler seem to be its doubtful economy in regular use, and the fact that only smokeless coal can be burned. Its greatest advantage is its favouring high

Digitized by Google

pressures, which soon reach their limit in cylindrical boilers; so, stated briefly, a less economical boiler is adopted to secure a more economical engine. It is a mistake to suppose all water-tube boilers fit for forcing: the following classifies the principal types regarding this quality:—

LIST OF TYPICAL WATER-TUBE BOILERS.

For Natural Draught only.

Babcock-Wilcox.	Oriolle.
Root.	Niclausse.
Lagrafel d'Allest.	De Naeger.

Capable of some Forcing.

Belleville.	Herreschof.

For Forced Draught.

Thornycroft.	Normand.
Yarrow.	Du Temple.

The four last-mentioned are most suitable for fast-speed war

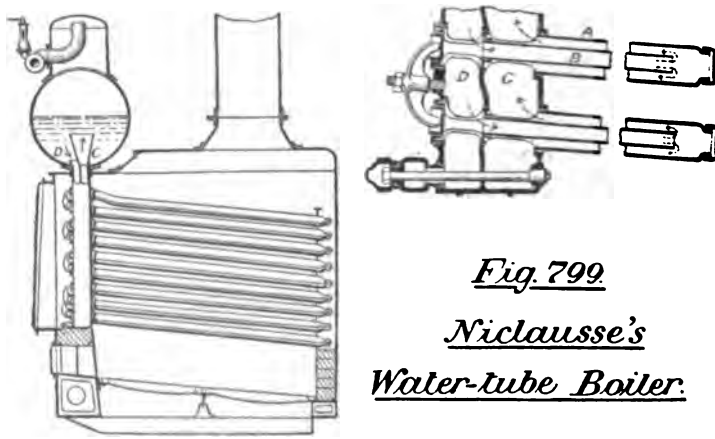

Fig. 799

Niclausse's Water-tube Boiler.

vessels, such as 'destroyers,' which require increased combustion on occasion.

The *Babcock-Wilcox* boiler has been already described, and may be taken as a type of natural-draught boiler. The *Niclausse*

Digitized by Google

deserves mention on account of its use of an inclined Field tube, the inner portion of which serves as downcomer; and there is only one header, a double one, placed at the front. In Fig. 799, A is the rising tube and B the downcomer, the rising header C entering the steam receiver at a higher point than the falling header D. The tubes are easily removed from the front.

The *Belleville* boiler, now considerably adopted on English battleships, is shown in Fig. 800. A is a non-conducting casing,

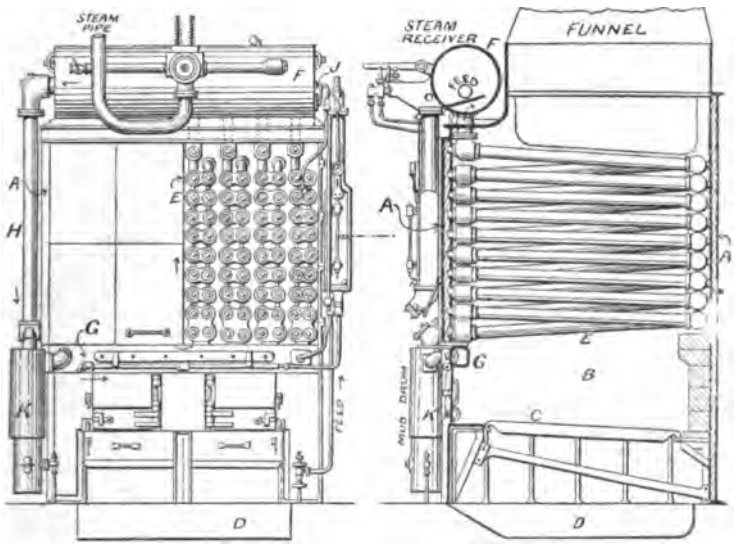

Fig. 800. The Belleville Boiler.

lined with firebrick at B, and containing firebars C, ashpit D, and tubes E. The tubes are divided into eight sets or 'elements,' each of which is a *coil* having its upper end connected to the steam receiver F, and its lower end to the feed collector G, which is a continuation of the downcomer H. The feed water, automatically controlled by a float-governed check valve, enters the receiver F at J, and is distributed along the lower portion, flowing then through pipes H and G, from the latter of which it enters

Digitized by Google

the element coils, rises, and passes into the receiver, beneath the baffle plate which separates the hot steam from the colder feed. The circulation is therefore caused by difference of density. K is a mud collector, or blow-off chamber. It is usual to make steam at a much higher pressure than is required, and let it pass through a reducing valve on its way to the cylinder; this gives drier steam by throttling, ensures a more perfect deposition of lime and magnesia, gives a steadier pressure at the engine, and permits the use of a smaller boiler for a given power.

In the *Thornycroft* boiler, Fig. 801, there is one steam receiver

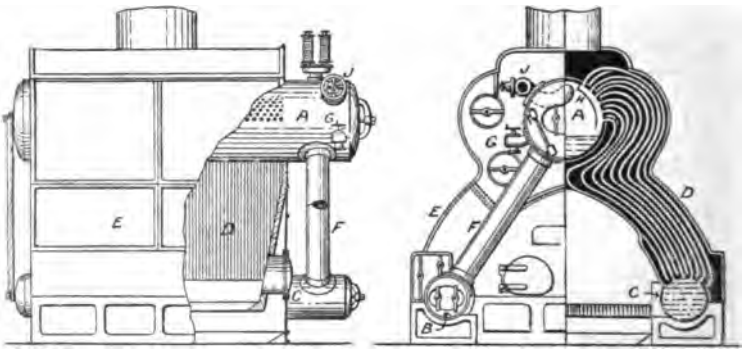

Fig. 801. The Thornycroft Boiler.

A, but two mud drums B and C, and circulation is due to a rise in the tubes D D and a fall in the downcomers F, outside the casing. The feed enters at G, the water being delivered along the receiver bottom, while two principal features are the entry of the water tubes into the steam space of the receiver, and their tortuous form for the purpose of meeting the draught normally. H is a baffle plate, and J the steam pipe.

The *Yarrow* and *Normand* boilers are similar to the Thornycroft, but the first has straight tubes, while those of the second are but slightly bent; in both cases they enter the steam drum at the bottom. The *Du Temple* is of the same type. The *Root*, *Lagrafel d'Allest*, *Oriolle*, and *De Naeger* are similar to

Digitized by Google

the Babcock-Wilcox, and the *Herreschof* is a coil boiler with pump circulation. (*See Appendix III., p.* 918.)

Fusible Plugs (see also p. 755). Fig. 802 is a section of

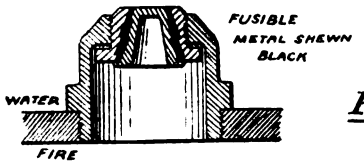

Fig. 802.

Fusible Plug.

one of these as introduced by the National Boiler Insurance Company. The white-metal should be renewed annually.

CHAPTER VIII.

P. 367. **Modulus of Resilience.**—The greatest elastic stress is often called *proof stress*. Then, from diagram 2, Fig. 326, we may define resilience as 'half proof load × proof strain,' or

$$\text{Resilience} = \tfrac{1}{2} W \Delta$$

$$\text{But } \Delta = \frac{fl}{E} \qquad \text{and } W = fa$$

$$\therefore \text{ Resilience} = \tfrac{1}{2} fa \frac{fl}{E} = \frac{f^2}{E} (\tfrac{1}{2} \text{ volume}).$$

The quantity $f^2 \div E$ is termed the *modulus of resilience*, and measures resistance to impact per cubic inch of the bar.

Example 61.—Compare the resilience per unit volume of two bolts A and B, in which for $\frac{1}{10}$ its length A has a sectional area ·8 of the remaining $\frac{9}{10}$: and B has for $\frac{9}{10}$ its length a sectional area ·8 of the remaining $\frac{1}{10}$ (Hons. Mach. Const. Exam. 1891).

In each case let f = unit stress on smaller area
and $\cdot 8f$ = unit stress on larger area.
Also let a = larger area, and $\cdot 8a$ = smaller area.

Then, taking bolt A, total resilience

$$= \left(\frac{f^2}{E} \times \frac{\cdot 8a \times 1}{2}\right) + \left(\frac{(\cdot 8f)^2}{E} \times \frac{a \times 9}{2}\right)$$

Digitized by Google

Resilience per unit volume $= \frac{3{\cdot}28 f^2 a}{E} \div \text{vol.} = {\cdot}334 \frac{f^2}{E}$

Similarly, taking bolt B, total resilience

$$= \left(\frac{f^2}{E} \times \frac{{\cdot}8a \times 9}{2}\right) + \left(\frac{({\cdot}8f)^2}{E} \times \frac{a \times 1}{2}\right)$$

Resilience per unit volume $= \frac{3{\cdot}92 f^2 a}{E} \div \text{vol.} = {\cdot}465 \frac{f^2}{E}$

$$\therefore \frac{\text{Resilience per unit vol. A}}{\text{Resilience per unit vol. B}} = \frac{334}{465} = \underline{{\cdot}714 : 1}$$

And bolt B is more economical for resisting shock, showing why it is better to turn down a bolt shank as at p. 402 to the diameter at bottom of screw thread.

P. 369. **Testing Machines.**—The *Drop-testing Machine* has always been favoured by railway companies for proving rails and car axles. The apparatus is simple, consisting merely of a large anvil on which are supports for the beam to be tested, a pair of upright guides, and a falling weight that can be raised to any definite height within them. The French railways use a 'monkey' (falling weight) of 440 lbs. with a drop of 11 ft. 6 ins., the rail supports being 3 ft. 7¼ ins. span, and the anvil weighing 10 tons. Messrs. Cammell use a weight of 1 ton, a fall of 20 or 30 ft., and a rail span of 3 ft. Rigidity and inertia of anvil are of considerable importance, but the chief difficulty is to attain constant rigidity. The Pennsylvania railroad has therefore placed its anvil, weighing 17,500 lbs., upon 12 stiff helical springs, each having two coils of 8″ and 5½″ diameter respectively, the outer one of $1\frac{3}{16}$″ steel and the inner of $\frac{13}{16}$″ steel, 9⅛″ long uncompressed and 5½″ compressed. These can support 80,000 lbs., and exert a constant resistance whatever the condition of ground. The monkey weighs 1640 lbs., its maximum fall being 43 feet, and the supports are 3 ft. apart for axle-testing. It is specified that the axles shall not deflect more than 5½″ with the first blow, delivered from a height of 23½ ft., and shall stand five blows before fracture.

Testing for Hardness.—Hardness may be defined as the resistance to permanent deformation, often a property of great importance, and a means of testing hardness with accuracy is very much to be desired. All hardness tests depend upon making an indentation in the material by means of a harder substance, but the

Digitized by Google

measurements are variously made. Mr. Thos. Turner loads a diamond point till it just scratches, and the load measures the hardness, while others have used points, knife edges or punches of hard tool steel, and have severally measured volume, depth, or length of the print. Prof. Unwin's method is more scientific, for although he uses only a knife edge of tool steel, he has, by plotting his experimental results, deduced the following formula :

$$\text{Relative hardness} = \frac{p^n}{i}$$

Where i = depth of indentation in inches.
p = pressure per inch width of knife edge.
$n = 1{\cdot}2$.

His apparatus, Fig. 803, consists of a plunger A sliding in a

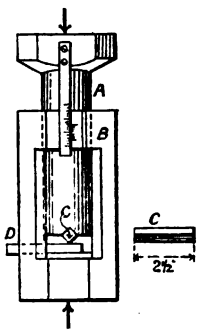

Prof. Unwin's apparatus for testing hardness

Fig. 803.

socket B, and pressing on the piece of excessively hard tool steel C placed on the specimen D. The whole is loaded in a testing machine, as shown by arrows, and both load and depth of impression measured, the former being gradually increased, and time allowed at each step. In no case must the specimen be stretched.

TABLE OF RELATIVE HARDNESSES.
(Measured by Prof. Unwin.)

Cast Steel	554
Brass	233
Mild Steel	143
Aluminium (cast)	103
Copper (annealed)	62
Zinc (cast)	41
Lead (cast)	4

Digitized by Google

P. 375. **Intensifying Compressor.**—The differential hydraulic principle shown in Fig. 727, p. 737, is a convenient means of obtaining high pressure with small load, if little quantity of water be desired, or a double-acting apparatus be permissible for continuing the stroke. It may equally well be applied to testing machines for intensifying town's water, and is so shown in Fig. 804, which represents Messrs. J. Stone & Co.'s apparatus for

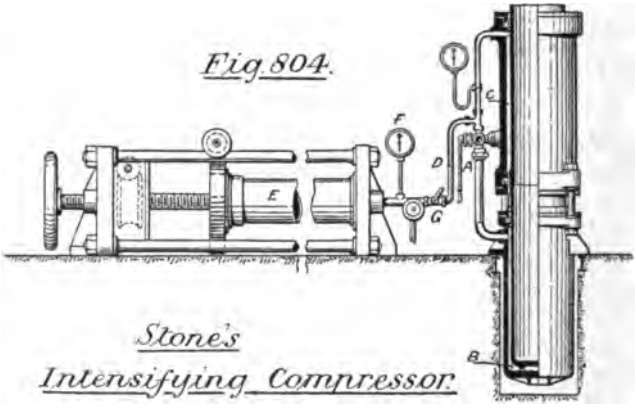

Fig. 804.

Stone's Intensifying Compressor.

testing pipe mains. The town's water is admitted through cock A, and acts at B on the larger area, thus intensifying the water in C, where the load is received on the annulus. The pressure water then passes along pipe D to the main E being tested, and the pressure is shown at F. The cock A is so arranged that town's water may be first admitted into C, D, and E, after which the flow is diverted to B and intensification takes place, the ram rising till its stroke is complete. If the test be not then finished, cock G is closed, while C and B are placed in equilibrium by means of cock A, and the ram is once more lowered. Again closing A, the pressure is intensified instantaneously in C, and G being opened, the test continues.

In a double-acting apparatus made by the same firm, a pair of rams are used, one being up while the other is down, and the cock, A, one to each ram, is opened and closed automatically by

Digitized by Google

tappets, so that the testing is continued without attention until stopped by hand.

P. 381. **Test Specimens.** — Professor Carpenter has experimented on specimens of various lengths, 2", 4", 6", and 8", from which he deduces that the ultimate strength (as shown by highest point of stress-strain curve) is independent of specimen length, and that percentage extension (ductility) at maximum load is pretty uniform. The ductility at rupture is, however, variable, being inversely as length of specimen up to 8" long, and afterwards constant. This indicates the need of a standard length of not less than 8"; but if maximum load and extension only are required, length is of no importance.

P. 385. **Stress-Strain Diagrams.**

Mechanical Hysteresis.—If tension experiments are made upon

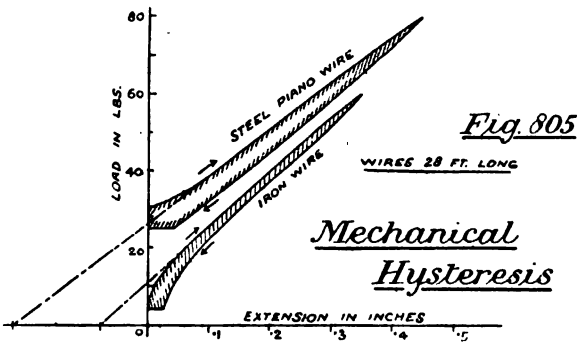

Fig. 805

Mechanical Hysteresis

rods or beams well within the elastic limit, by means of loads gradually increased from zero to a maximum and then gradually decreased to zero again, the *ascending* stress-strain curve will not agree with the descending one. The first will follow the true elastic line, but the second will slope more steeply and meet the strain base at a point somewhat to the right of the origin. The apparent permanent strain, called *lag*, will gradually disappear, however. The area enclosed by the two curves has been called *mechanical hysteresis* (from its similarity to magnetic hysteresis)

Digitized by Google

and represents a loss which is probably due to heating. Fig. 805 shows experiments on wires 28 feet long, where hysteresis is very clear. The iron wire had a diameter of ·049", and the steel wire ·045".

Influence of Temperature on Strength.—This may be separately considered for low and for high temperatures.

At low temperatures Professor Rudeloff tried seven different materials:

1. Rivet iron.
2. Rolled iron.
3. Hammered iron.
4. Acid open-hearth steel.
5. Basic Bessemer steel.
6. Spring steel.
7. Crucible steel.

And the temperatures for every material were three, 64°, − 4°,

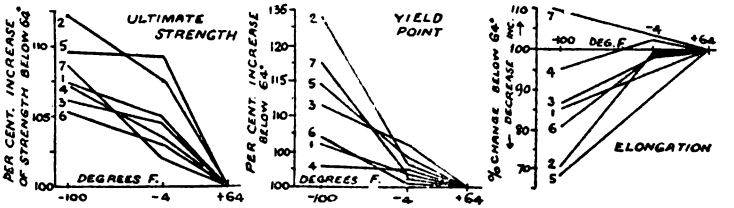

Fig. 806. Influence of temperature on strength.

and − 100° Fahr. Measurements were made of ultimate tensile strength, yield-point strength, and percentage elongation in $3\frac{1}{2}$ ins., the results appearing in Fig. 806, where each specimen is numbered. Much, apparently, depends on the chemical composition of the material, but generally the ultimate strength is raised rapidly at first and slowly afterward, the yield point slowly at first and rapidly afterward, while percentage elongation is generally decreased. The material is therefore less capable of resisting shock at low temperatures. Professor Dewar finds a strength increase of 50 to 100% at − 295° Fahr.

At high temperatures metals decrease both in strength and ductility. Copper alloys become much weaker, but cast iron is little affected. Probably Professor Unwin has given most

Digitized by Google

attention to strengths at high temperatures, and he states that iron and steel usually gain slightly in strength up to 500°, but after 600° decrease rapidly. For the copper alloys he deduces the maximum strength:

$$f = a - b\,(t° - 60)^2$$

where the values of a and b are as follows:

	a.	*b.*
Copper	14·8	·000014
Gun-metal (cast)	12·5	·000050
Phosphor Bronze (cast)	16·1	·000026
Brass (cast)	12·5	·000024
Brass (rolled)	24·1	·000028
Delta Metal (rolled)	31·3	·000041
Muntz Metal (rolled)	24·7	·000029

Experiments are made by surrounding the specimen with a box of oil heated by gas-jets, the measuring apparatus being outside.

EXPERIMENT ON WHITWORTH COMPRESSED STEEL.
BY PROFESSOR GOODMAN.

	At 60° Fahr.	At 400° Fahr.
Maximum stress per sq. in. ...	34·03	31·83
Elastic limit per sq. in.... ...	21·97	20·45
Extension in 10 ins.	16%	11·7%

P. 390. **Wöhler's Law.**—Unwin's formula, p. 390, being empirical, cannot be proved from first principles, so its application will be further shown in the next problem.

Example 62.—Two steel bars, having a static breaking load of 30 tons per square inch, are stressed in tension, the one from 5 to 6 tons and the other from 1 to 6 tons per square inch. Find the actual breaking strengths to be assumed for the respective methods of loading.

Digitized by Google

Now stress variation must be put in terms of maximum stress, and this again in terms of f_2, the new breaking stress, thus :

$$S = \frac{\text{highest stress} - \text{lowest stress}}{\text{highest stress}} \times f_2$$

Case I. Ultimate static stress = 30 tons

$$S = \frac{6-5}{6} f_2 = \tfrac{1}{6} f_2$$

$$\therefore f_2 = \tfrac{1}{12} f_2 + \sqrt{30^2 - (2 \times \tfrac{1}{6} f_2 \times 30)}$$

Solving the quadratic, $f_2 = 27{\cdot}25$ tons square inch.

Case II. Ultimate static stress = 30 tons

$$S = \frac{6-1}{6} f_2 = \tfrac{5}{6} f_2$$

$$\therefore f_2 = \tfrac{5}{12} f_2 + \sqrt{30^2 - (2 \times \tfrac{5}{6} f_2 \times 30)}$$

Solving as before, $f_2 = 25{\cdot}7$ tons square inch.

The value of n in this formula may be 1·5 for iron and 2 for steel in general, but varies considerably, the deductions from Wöhler's and Bauschinger's experiments being :

Iron	n	*Steel*	n
Bar Iron (W)	1·33	Axle Steel (W)	1·83
Bar Iron (B)	1·67	Axle Steel (B)	1·91
Bar Iron (B)	1·53	Rail Steel (B)	2·00
Plate Iron (B)	1·60	Spring Steel (W) ...	2·14
		Boiler Steel (B) ...	1·53

P. 393. **Average Stresses.**—The following additional figures are here given, all in tons per square inch :

Material.	Tensile Stress		Extension per cent.
	Breaking	Safe	
Manganese Steel (14% Mn) ...	60	10	44
Nickel Steel (3% Ni for plates) ...	37	7½	20
Nickel Steel (3·35% Ni for forging)	45	8	27½
Silicon Bronze	28	5	30
Aluminium Bronze	30	5	25
Delta Metal (forged)	30	5	—
Delta Metal (cast)	20	3½	—
Sterro Metal	27	4½	—

Digitized by Google

P. 400. **Thick Cylinders.**—It appears from Lamé's formula (p. 399) that in an originally unstrained cylinder, if the pressure from inside be greater than f the tensile strength of the material, no amount of thickness can prevent bursting. This difficulty can be to some extent overcome by the principle of initial stressing, p. 758. It has also been found that if the fluid pressure in cast-iron cylinders be gradually increased beyond the calculated limit, the *internal* diameter may be permanently stretched, and then p has been known to reach 3 tons sq. in. with safety.

The formulæ used in designing built-up guns, deduced from Lamé, is here given (see also Fig. 749).

p_0 = internal pressure on firing
p_1 = pressure between A and B tubes on firing
p_2 = pressure between B and C tubes on firing.

t_0 = maximum hoop tension in cylinder A
t_1 = maximum hoop tension in cylinder B
t_2 = maximum hoop tension in cylinder C.

r_0 = internal radius of cylinder A
r_1 = internal radius of cylinder B
r_2 = internal radius of cylinder C
r_3 = *external* radius of cylinder C.

Then, $$p_0 = \frac{r_1^2 - r_0^2}{r_1^2 + r_0^2}(t_0 + p_1) + p_1 \qquad p_1 = \frac{r_2^2 - r_1^2}{r_2^2 + r_1^2}(t_1 + p_2) + p_2$$

$$p_2 = \frac{r_3^2 - r_2^2}{r_3^2 + r_2^2} \cdot t_2$$

To obtain these results, each outer tube must be smaller than the next inner tube by an amount called *shrinkage*.

$$S_2 = \left\{ \begin{matrix} \text{Shrinkage between} \\ \text{A and B} \end{matrix} \right\} = \frac{p_0 - p_1 + t_1 - t_0}{E} \cdot 2r_1$$

$$S_3 = \left\{ \begin{matrix} \text{Shrinkage between} \\ \text{B and C} \end{matrix} \right\} = \frac{t_2 + p_0 - (p_0 - p_2)\left(\frac{r_2^2 + r_0^2}{r_2^2 - r_0^2}\right)}{E} 2r_2$$

The formula for p may be extended to four or reduced to two

Digitized by Google

tubes, for it is seen how p_0 follows from p_1, and so on, but for shrinkage a further value is given for clearness, thus:

$$S_4 = \left\{ \begin{matrix} \text{Shrinkage between} \\ \text{C and D} \end{matrix} \right\} = \frac{t_3 + p_0 + (p_0 - p_3)\left(\frac{r_3^2 + r_0^2}{r_3^2 - r_0^2}\right)}{E} 2r_3$$

The radii are first assumed, varying approximately in geometrical progression outwardly. A limit is next placed on the hoop tensions, and p_2 found. From p_2 we pass to p_1 and thence p_0 (the safe gas pressure) is deduced. Finally, the shrinkages are calculated to give these pressures. A rough shrinkage rule is given on p. 400.

P. 400. **Shrink Fits.**—There are three methods of fitting a cylinder rigidly in a socket, viz. by *driving*, *forcing*, and *shrinking*. In all three, the cylinder must be larger than the socket by an amount determined by experience. The 'largeness' for driving and force fits is given on p. 826; and for shrink fits, where the outer portion is heated before slipping over the cylinder, the following simple rules may be adopted:—

$$S = \cdot 0025 \times \text{diameter of hole}$$

if the parts are very thick and unresisting; but

$$S = \cdot 0035 \times \text{diameter of hole}$$

if thinner and more elastic. Care must be taken not to heat higher than is absolutely necessary, and to prevent endlong sliding by means of clamps.

P. 402. **Strength of Bolts.**—Engineers have disagreed considerably as to the stress which comes on fluid-tight covers, though the problem is easily determined. First, suppose the flange and seating be quite rigid, and no packing be placed between the surfaces; also that the necessary tightness is obtained by an initial 'screwing-up' stress in the bolt, as at A, Fig. 807. If now the fluid stress be exerted, the flange will tend to take the condition B, but as it is evident that (the flanges being rigid) the surfaces cannot separate till the pressure exceeds the initial stress, it follows that the bolt cannot stretch till such stress is exceeded; and the bolt stress must either be that due to screwing or to

Digitized by Google

pressure, whichever be greater, but not both. As, however, an excess of fluid pressure would cause the joint to leak, the initial stress cannot be exceeded.

Secondly, suppose an elastic packing be placed between the surfaces, and let us examine the problem by the elementary apparatus at C, Fig. 807. Between two walls *d* and *e* a light block *f* is supported, by a thin wire spring *b* and a strong india-rubber bar *a*; and let the walls be separated so as to produce a tensile stress, say, of 10 lbs. in each spring. Further, imagine

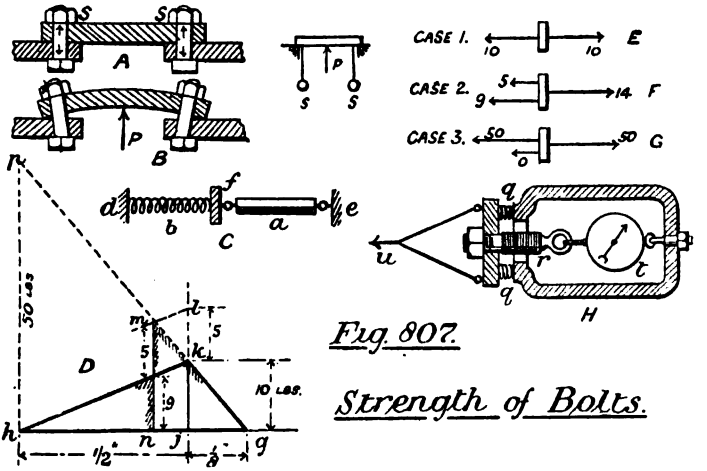

Fig. 807.

Strength of Bolts.

that the wire spring is thus caused to extend ½", while the rubber bar stretches ⅛". The stress-strain diagram is shown at D, where $jk = 10$ lbs., $hj = \frac{1}{2}''$, and $jg = \frac{1}{8}''$. Now let a force of 5 lbs. be put upon the block *f* so as to pull it leftwards, thus increasing the stress in *a* and decreasing it in *b*. Showing this on the diagram, produce *gk* and *jk*: make $kl = 5$ lbs., draw $lm \parallel kh$, and $mn \parallel lj$. The shaded portion shows the new diagrams, indicating the stress in *b* as 9 lbs., and that in *a* as 14 lbs. If now the force of 5 lbs. be gradually increased, the stress in *b* will decrease; and when a force of 50 lbs. is reached as at *hp*, the spring is entirely freed from stress. The three cases are shown by the static diagrams E, F, and G.

Digitized by Google

We next apply the elementary case to the model H. The spring *b* becomes the packing *q q*, the rubber bar the bolt *r*; and the two models C and H are therefore under similar conditions, only that *q q* are in compression instead of tension. Applying the same numbers, the screwing stress is 10 lbs., felt equally on *r* and *q*, and shown on dial *t*, and a force of 5 lbs. being exerted at *u*. there is a tensile stress of 14 lbs in *r*, while the compressive stress in *q* is reduced to 9 lbs. Thus, any real conditions may be ascertained by a diagram such as D, if the resiliences of bolt and packing be known. If the packing be practically rigid, we approach the case A, but the flanges always have a certain elasticity.

In practice, the real difficulty is to find what stress the workman will cause in screwing up; hence the rules on p. 402 are usually adopted, where the screwing stress is made a ratio of the pressure, and the latter taken as the only guide in calculation. Also the pressed area is measured to the inner edge of the bolts.

P. 422. **Shaft Couplings.**—Mr. Archibald Sharp's coupling, Fig. 808, is a combination of box and flange, and is an undoubted

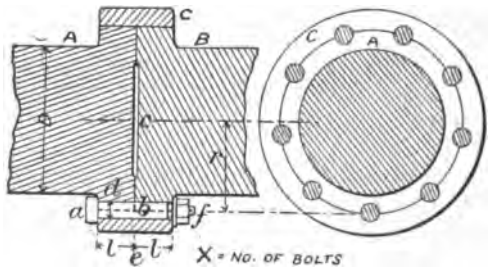

Fig. 808.

Sharp's Coupling.

improvement on the latter as regards strength distribution. The bolts receive shear stress along planes shown by dotted lines, and the twisting effort in A is transmitted through surfaces *a b*, *b c*. Similarly, B receives the twist through surfaces *f b*, *b c*. The usual flange-coupling bolt has a shear stress over the whole cross section, as *e b c*, but here ring C binds the outer halves of every bolt, passing the strength *a b* to *b f*, and the bolts are only

Digitized by Google

weakened at the half cross-section *b c*. Thus only about half the usual bolt strength is required.

Equating the strengths of shaft and bolts, and neglecting the small half cross-sectional bolt strength at *b*,

$$f_s \frac{\pi}{16} D^3 = (\tfrac{3}{4} f_s X l d) r$$

$$\therefore \quad d = \cdot 262 \frac{D^3}{X l r}$$

The number of bolts may be $X = 2 \cdot 5 \sqrt{D}$

the nearest whole number being taken. If also the ring c be made large enough to cover the bolt washers, it will have ample strength.

P. 426. **Deflection of Helical Springs.**—In his difficult and laborious investigations on the strength of square and rectangular shafts, St. Venant found that the greatest stress and strain occurred at the middle of the (longest) side of the sections. Now in formula for θ, p. 424, d is evidently the diameter of greatest stress; therefore, for square wire,

$$f_s = \frac{wr}{\cdot 208 s^3} \qquad \text{and } \Delta = \frac{2 f_s l r}{C s} = \frac{w n r^3}{C d^4} 60.5$$

while for rectangular wire (*see p.* 421),

$$f_s = \frac{wr}{\cdot 2944 \left(\frac{b^2 h^2}{\sqrt{b^2 + h^2}} \right)} \qquad \text{and } \Delta = \frac{2 f_s l r}{C b} = \frac{w n r^3}{C \left(\frac{b^3 h^2}{\sqrt{b^2 + h^2}} \right)} 42.6$$

P. 430–2. **Moment of Resistance, Moment of Inertia or Second Moment, and Centres of Gravity.**—As area has no mass, purists now object to the term 'Moment of Inertia of Area,' substituting the more reasonable '*Second Moment*;' and '*Centroid*' is similarly adopted instead of 'Centre of Gravity of Area.' Also we may define the nth *moment* of an area round a given line, as that obtained by dividing the area into very small pieces, and multiplying every piece by the nth power of its distance from the given line; or, algebraically,

$$n^{th} \text{ moment} = \Sigma (a h^n)$$

Digitized by Google

We thus have 1st, 2nd, and 3rd moments of an area, each of which has its use, and all easily found by a graphic construction. Referring to Fig. 809, let the given area P P_1, be imagined to

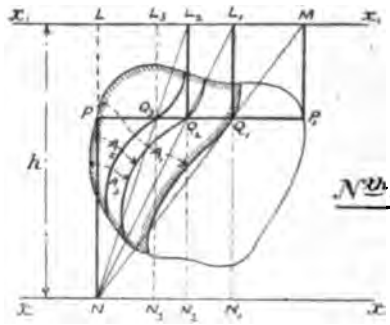

Fig. 809.

Nth Moment of Area

rotate round axis $x\,x$. Draw P P_1 ∥ $x\,x$, and take any new line, x_1x_1 at any distance h, and ∥ $x\,x$. Project P_1M and P N, and join M N, giving a point Q_1. Do this for several horizontal intercepts and obtain the shaded 1st moment area P Q_1. In like manner project Q_1L_1 and join L_1N, giving the shaded 2nd moment area PQ_2. Similarly the 3rd moment area is obtained from area PQ_2. Then, calling the areas respectively A_1, A_2, and A_3,

$$\left.\begin{array}{l} \text{1st moment} = A_1 h \\ \text{2nd moment} = A_2 h^2 \\ \text{3rd moment} = A_3 h^3 \end{array}\right\} \text{of the original area round } x\,x,$$

and any higher-powered moment can be obtained by continued process.

Proof.—Let P P_1 be an element of area having width e.

$$n^{th} \text{ moment} = \Sigma\{PP_1 \times e \times (PN)^n\}$$

$$\text{Now } \frac{LM}{PQ_1} = \frac{h}{PN} \quad \text{and } LM = PP_1$$

$$\therefore PP_1 \times PN = h \times PQ_1 \quad \ldots\ldots\ldots\ldots\ldots\ldots \quad (a)$$

$$\text{and 1st moment} = \Sigma\{PP_1 \times e \times (PN)^1\}$$

$$= \Sigma(PP_1 \times PN \times e) = h \times \Sigma(e \times PQ_1) = \underline{A_1 h}.$$

$$\text{Again } \frac{LL_1}{PQ_2} = \frac{h}{P} \quad \text{and } LL_1 = PQ_1$$

Digitized by Google

$$\therefore \quad PQ_1 \times PN = h \times PQ_2 \quad \ldots\ldots\ldots\ldots\ldots\ldots \quad (b)$$

and 2nd moment $= \Sigma\{PP_1 \times e \times (PN)^2\}$

$= \Sigma\,(e \times h \times PQ_1 \times PN)$ ... ... by substitution from (a)

$= \Sigma\,(e \times h^2 \times PQ_2)$ ... ... by substitution from (b)

$\therefore \quad = h^2 \times \Sigma\,(e \times PQ_2) = \underline{A_2 h^2}$

and higher moments may be similarly proved.

Applying the construction to beam sections, we must first find the centroid. Imagine any given section $a\,b$ (Fig. 810). Find its

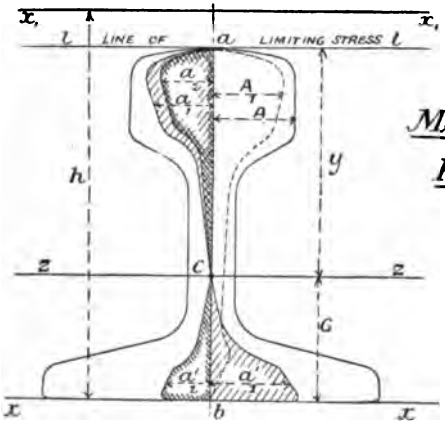

Moment of Resistance.

Fig. 810.

first moment A_1, round $x\,x$ say, using any height h. Dealing only with the right-hand half for simplicity, we have from the definition of centre-of-gravity,

$$A_1 h = A\,G \qquad \text{Hence, } G = \frac{A_1 h}{A}$$

which gives the height of neutral axis $z\,z$ by a much more simple and accurate method than those on p. 432, especially if a planimeter is obtainable. We next require I, the 2nd moment, round $z\,z$, using preferably the reference distance y to line of limiting stress, in constructing the curves. Treating the left side, to avoid confusion, every horizontal strip is referred to $l\,l$, and its projection joined to C, *producing if necessary*, till the original strip is crossed; and thus the areas a_1 a'_1 are found, on *opposite* sides of the

Digitized by Google

vertical centre line. Continuing the process on areas $a_1\ a'_1$, the 2nd moment areas $a_2\ a'_2$ are obtained on the *same* sides of the vertical. Now the real value of I will be found by doubling our results, for we have only used half of the section; hence,

$$I = 2(a_2 + a'_2)y^2 \qquad \text{and} \quad Z = \frac{I}{y} = 2(a_2 + a'_2)y$$

or generally,

$$\text{Moment of Resistance} = f\,(\text{2nd moment area})\,y$$

if the reference distance y has been adopted. In cast-iron beams y_t is always taken, which is less than y_c (see p. 435), and the resulting curves are slightly changed, but the construction explained must still be rigidly followed. It will be seen that this method is superior to that at p. 430, though the latter is still left in the text as sometimes convenient.

P. 441. **Fixed Beams.**—When beams have their ends fixed as in Figs. 399 and 400, the B_m curve may be found graphically, by supposing it the algebraic sum of two moment curves, one caused by the 'action' of the free load, and the other by the 'reaction' (a couple) in the wall itself. These opposing curves must cover exactly equal areas: for, considering the upper fibres of the beam say, the total effect of the load is to shorten them; but, remembering that the total length of the beam is unalterable on account of its fixedness, the reactionary couple must entirely eliminate the aforesaid compression. Now total strain may be shown by the same curve as total B_m, for

$$B_m = f\frac{I}{y} \qquad \text{and} \quad B_m \propto f \propto \delta$$

Hence, sum of B_m regarding l (viz. average $B_m \times l$) due to *free* load must equal that due to wall couple.

Taking beam A B (Fig. 811), loaded in any general manner: the shear is resisted by piers C D, while the wall couples are shown by arrows. Now B_m curve $a\,b\,c$ for free beam is easily found, from Figs. 402 or 404; while the wall arrows will give a constant strain and therefore a constant B_m curve $d\,e\,f\,g$. But as these areas must be equal, $d\,e$ is found. Finally, superpose the two, as shown below, and the resulting shaded portions give the final B_m curve, the contra-flexures occurring at h and j.

Digitized by Google

Taking next the special cases of Figs. 399 and 400, the first is easily solved, but the second or uniformly loaded beam will be further explained by Fig. 812. Now the B_m curve for a free beam is a parabola, where $b\,d = Wl \div 8$; and the wall moment is $e\,f\,g\,h$, where $e\,g = \frac{2}{3}(b\,d)$, to make areas A and B equal. The final B_m curve is shown shaded at C. Lastly, to find contra-flexure points, take any distance x between k and l.

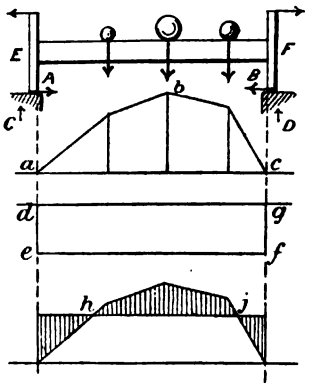

Fig. 811.

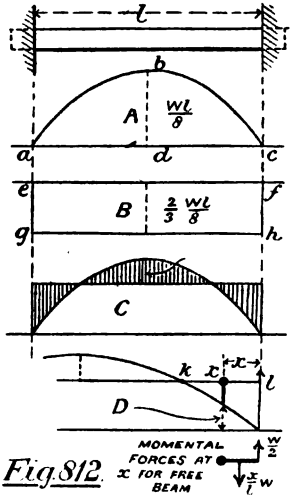

Fig. 812.

Fixed Beams.

$$B_m \text{ at } x = \frac{Wl}{12} - D = \frac{Wl}{12} - \left(\frac{W}{2}x - \frac{x}{l}W \cdot \frac{x}{2}\right)$$

$$= \frac{W(l^2 - 6xl + 6x^2)}{12l}$$

Let x be increased till it equals kl. Then B_m = zero, or

$$l^2 - 6xl + 6x^2 = 0,$$

from which, solving the quadratic,

$$x \text{ or } kl = \cdot 211l.$$

Case VIII., Fig. 401, p. 443, is best deduced from Clapeyron's theorem, *pp.* 445 and 762.

P. 445. **Bending Moments for Continuous Girders.** —The previous methods may be further extended to these cases.

Digitized by Google

Four examples are given in Fig. 813, where for two spans we merely have a duplicate of Fig. 401, p. 443. In all cases the parabolas $Wl \div 8$ are first drawn for *free* beams, and these are next opposed by a curve of reactionary moments, consisting of straight lines showing zero at the extreme ends. In the figure the actual moments are drawn and stated, as found from Clapeyron's formula, the shaded curve giving the final B_m; but the second or

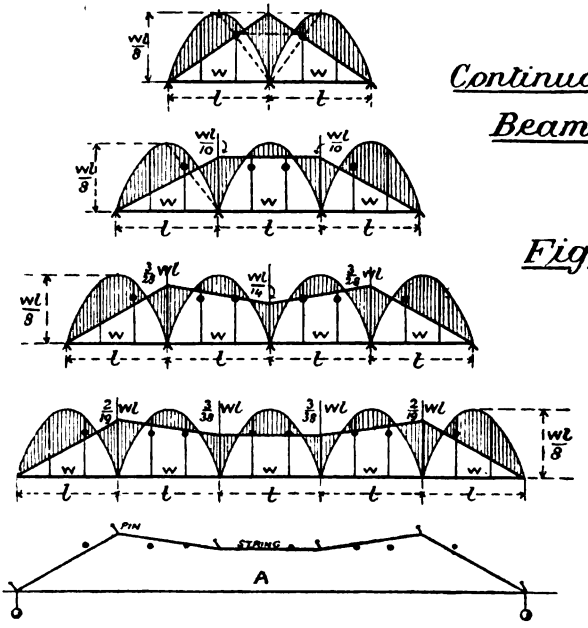

opposing curve may be very closely obtained in a graphic manner. Divide every span in thirds, drawing vertical lines, and on every vertical except the outside ones put a mark at $\frac{2}{3}$ of $Wl \div 8$. Then pass the second curve through these points so as to give the best average results, which is easiest done by string, pins, and weights, as at A. This method, which is due to Claxton Fidler, is clearly an extension of the principles already explained, and has the advantage of being applicable to any mode of fairly uniform loading, however much it may vary from span to span.

Digitized by Google

Graphical Calculus.—Let a curve be drawn with given ordinates and abscissæ, and be called a *primitive curve.* A second curve may be constructed to the same base, which will show the gradually increasing value of the area under the first curve, as we travel say from left to right; and this second curve we shall call the *sum curve.* It represents the integration or summation of the first curve. A third curve can next be drawn showing the rate of rise or fall of the primitive curve, and this we shall term the rate- or *slope-curve*, being simply a graphic differentiation of the first curve.

Let the primitive curve A B, Fig. 814, rise from y_1 to y_2, while

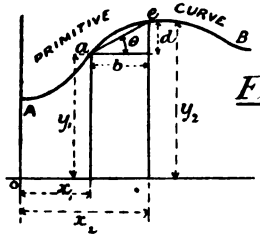

Fig. 814

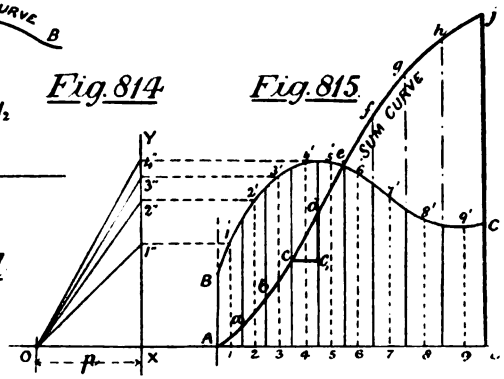

Fig. 815

Graphical Calculus.

the abscissæ change from x_1 to x_2. Then y increases $y_2 - y_1$ units of y for $x_2 - x_1$ units of x, or

$$\left.\begin{matrix}\text{Rate of growth}\\ \text{of } y, \text{ for one unit of } x\end{matrix}\right\} = \frac{y_2 - y_1}{x_2 - x_1} = \frac{d}{b} = \tan\theta$$

This is the mean rate of growth between a and e, and may be assumed to occur at f, the midway point. The instantaneous rate may be found by supposing b to *gradually* become indefinitely small, when the line $a\ e$ will finally assume a position tangential to curve A B, at the point considered. Hence the rate of growth of a curve is always shown by the trigonometrical tangent, or the slope, of a line drawn tangential to the curve.

To draw the Sum Curve, that is, to find area A B C D under

Digitized by Google

any primitive curve, Fig. 815: erect several vertical lines, unequally spaced, there being more where the curve varies greatly, also further mid verticals 11′, 22′, &c. Take any pole O, at a known distance p from a vertical X Y: project points 1′, 2′, 3′, &c., horizontally to X Y, and join each projection to O. Next draw A a ‖ O1″, $a\,b$ ‖ O2″, $b\,c$ ‖ O3″, &c., till the whole sum curve A to k be formed, whose ordinate at any point will show area under primitive curve up to that point, measuring from A; while D j will represent the whole area A B C D.

To Draw the Slope Curve, the reverse process must be performed, and thus the primitive curve in Fig. 815 will show by its ordinates the slope of the sum curve. For example, suppose we want the slope between $c\,d$, we draw O4″ ‖ $c\,d$, and produce 4″ to 4′, giving a point in what will be the slope curve.

For proof draw $c\,c_1$ horizontally. Then

$$\text{slope of } c\,d = \frac{d\,c_1}{c\,c_1} = \frac{44_1}{p} = \frac{\text{vertical of slope curve}}{p}$$

If we make $p = 1$, the steepness of any primitive curve will be measured by the slope curve ordinate. Again, by cross multiplication,

$$c\,c_1 \times 44' = p \times d\,c_1$$

But $c\,c_1 \times 44'$ is the area between two verticals of primitive curve. Hence if $p = 1$, $d\,c_1$ or rise of sum curve will show increase of primitive curve area, and ordinate of sum curve at any point will show area of primitive curve to that point. Also the value p may be so arranged that the new curves may be read off directly to any chosen scale.

Bending Moment and Vertical Shear by Graphic Summation.—The shear on any beam section is due to total load on one side of section less the support reaction (if any) on that side. The beam A C, Fig. 816, is stressed by a load whose intensity per foot run is shown by curve A B C, drawn to a scale of 100 tons per inch. Base scale being 1 foot per inch or $\frac{1}{12}$, let $\frac{1}{8}$ in. show 100 tons on shear scale. Supposing an increase of 100 tons on the shear curve, over a base of 1 foot; d = 100 tons, b = 1 in., and y (load) = 100 tons = 1 in.

Digitized by Google

$$\text{But } \frac{f}{y} = \frac{b}{d} \qquad \therefore\ p = \frac{by}{d} = \frac{1 \times 1}{\frac{1}{8}} = 8 \text{ in.}$$

and the polar distance is fixed. Taking base D M, summate A B C from pole O, obtaining D E F M, showing total load on the left of any vertical. Next make D H = M F, and with H as pole summate D E F to base D J, obtaining D G. A vertical through G will pass

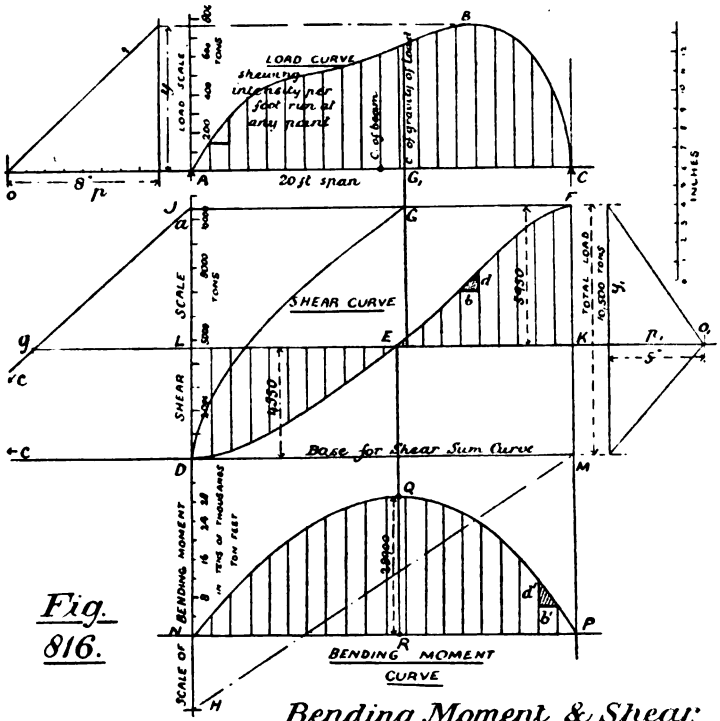

Fig. 816.

Bending Moment & Shear

through the centre-of-gravity of the load. Set off $a\,c$ = A C, $a\,g$ = A G, and draw g K horizontally. Then D L and F K are right and left reactions respectively. The deduction of area D L K M from D E F M gives the two triangular areas, whose verticals indicate shear, or total load on left of section less left reaction.

Digitized by Google

From a study of pp. 438 to 442 it will be seen that the B_m curve is simply the sum of the shear curve, the point of origin of the former being where $B_m = 0$, viz., at the supports of a girder, and the outer end of a cantilever. B_m will be a maximum where shear changes sign, and will decrease with minus shear. In Fig. 816 let B_m increase by 1000 ton-feet over a base of 1 foot, caused by a shear of 1000 tons intensity over 1 foot base; and let a B_m scale of $\frac{1}{4}$ in. = 1000 ton-feet be proposed. Then $d' = 1000$ t.f. = $\frac{1}{4}$ in., $b' = 1$ in., $y' = 1000$ tons = $\frac{1}{8}$ in. × 10, and

$$p' = \frac{b'y'}{d'} = \frac{1 \times \frac{1}{8} \times 10}{\frac{1}{4}} = 5 \text{ in}$$

The B_m curve can now be drawn, on base N P, by summating D L E K F from pole O_1. Commencing at P, the curve rises to Q

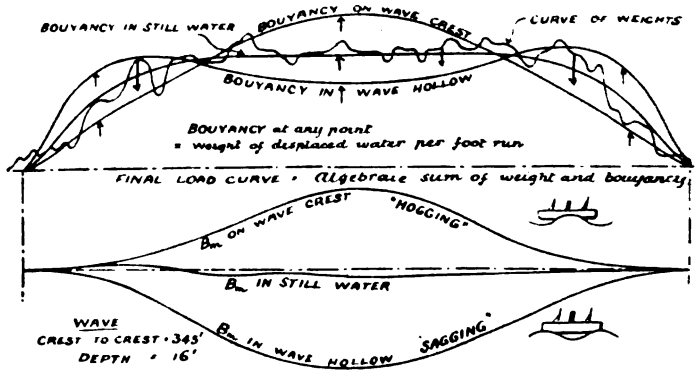

Fig 817. Ship's Bending Moments.

the maximum, and then decreases from Q to N, the shear being minus. These constructions are especially useful for ships. A curve of weights being drawn, is opposed by a curve of buoyancy or the weight of water displaced at every section, and the net result is the load curve, from which shear and B_m may be deduced as before. Two extreme cases are taken, one with wave crest amidships, causing 'hogging' strains; and the other with crests near the ship ends, causing 'sagging' strains. Lastly the sections are treated as built up beams. Fig 817 is an actual example.

Digitized by Google

P. 446. **Culmann's Diagram.**—To prove this construction refer to Fig. 818. Taking any section as B, we shall show that $B_m = LU \times H$. Reaction $x = GJ$, triangles K L M and O J G are

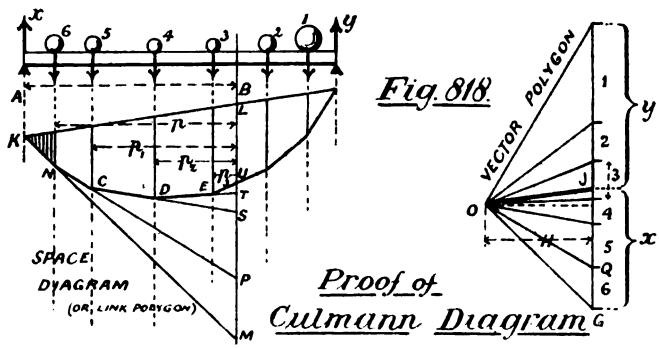

similar, as also are N P M and O Q G; and so on with C S P, D T S, and E U T.

$$\frac{QG}{H} = \frac{PM}{p} \quad \text{and} \quad QG \times p = PM \times H \ldots\ldots = \text{moment of 6.}$$

Similarly $5 \times p_1 = SP \times H \ldots\ldots = \text{moment of 5.}$

and $4 \times p_2 = TS \times H \ldots\ldots = \text{moment of 4.}$

and $3 \times p_3 = UT \times H \ldots\ldots = \text{moment of 3.}$

Again, $\frac{GJ}{H} = \frac{ML}{AB}$ and $GJ \times AB = ML \times H = \text{moment of } x.$

$$\therefore \text{Resultant moment} = Mt_x - (Mt_6 + Mt_5 + Mt_4 + Mt_3)$$
$$= ML \times H - (PM + SP + TS + UT)H = \underline{LU \times H.}$$

It is wise to call L U distance and H force, thus keeping space and force diagrams quite separate. Shear is easily proved from previous statements.

P. 450. **Deflection of Beams by Graphic Summation.**—Let a beam A V, Fig. 819, be bent to the curve A B C V, by means of a load of any kind, the beam section being of any shape, but here considered uniform at all sections. Imagine a small portion A B, in which the external fibres D D will be extended or compressed by the amounts d and d_1 respectively; and if δ = strain,

$$d = \delta D = y\frac{d}{y} = y\theta$$

Digitized by Google

Let lines a and b be tangents to the curve at A and B respectively. Then $\theta = a$, and $\tan a = a$, as a is small. Also $\delta = f/E$.

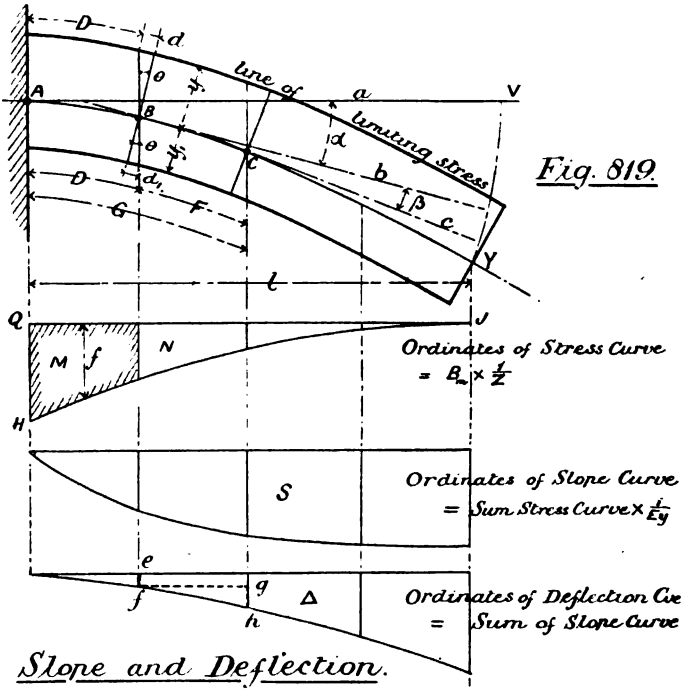

Fig. 819.

Slope and Deflection.

$$\therefore \delta_D = \frac{f}{E}{}_D = y\theta = ya = y \tan a$$

and $f_D = Ey \tan a = Ey$ (slope accumulated from A to B)

Let Q H J be a B_m curve for the load, which we can transform into a limiting-stress curve, for $f = B_m \div Z$. Then

f_D = area M = (slope accumulated from A to B) Ey
also, area N = (slope accumulated from B to C) Ey
$\therefore$ areas M + N = (slope accumulated from A to C) Ey.

Hence, $\left.\begin{matrix}\text{sum of stress} \\ \text{curve to any point}\end{matrix}\right\} = \left\{\begin{matrix}\text{total slope at} \\ \text{that point}\end{matrix}\right\} Ey$

Digitized by Google

$$\text{And, slope ordinate} = (\text{stress sum-curve ordinate}) \frac{1}{Ey}$$

Thus the slope curve S may be drawn by summating the stress curve, and then dividing by Ey.

Again, if A B be made very small, the angle α = V A B, and tan α = average slope between A B. Then, *due to bending* A B *only*,

Deflection at B = D tan α = D (average slope A to B).

Deflection at C = G tan α = G (average slope A to B).

And, *due to bending* B C *only*,

Deflection at C = F tan β = F (average slope B to C).

$\therefore$ Total deflection at C = G (slope A B) + F (slope B C) = $ef + gh$

$$\text{And, sum of slope curve to any point} = \text{Total deflection at that point.}$$

The problem is therefore completed by drawing the deflection curve Δ as the summation of slope curve area, and the general formula is deduced for a beam of uniform section:

$$\text{Deflection} = \frac{\Sigma(\Sigma B_m)}{Z E y} = \frac{\Sigma(\Sigma B_m)}{E I}$$

To prove that the maximum deflection of a cantilever with concentrated load = $W l^3/3 E I$ (p. 451): the B_m curve is triangular, whose sum = $W l^2/2$, and this is the maximum slope. But the slope curve is a parabola, whose area is therefore $\frac{2}{3} W l^2/2 \times l$ viz., $W l^3/3$, which is the second summation of the B_m; and by above general formula, deflection = $W l^3/3 E I$.

Some care is required in fixing scales, but previous explanations may be consulted. When beam section varies, Z will alter also, and the *stress* curve must be found: then continue as before. Note that *load*, *shear*, B_m, *slope*, and *deflection* curves are a continuous series, where each is the sum or integral of the preceding one.

P. 458. **Pillars and Struts.**—In the paper cited on p. 458, Prof. Fidler assigns various reasons why pillar strength cannot be shown practically by Euler's formula, such as an inconstant E, even in the same strut, and initial curvature in line of thrust, the latter altering W considerably. In Fig. 820 the crosses show Christie's experiments on T bars, and the small circles

Digitized by Google

Hodgkinson's results for hollow round W.I. columns, co-ordinates being f and r, as on p. 459. As the plottings scarcely approach the Euler curve, the problem is to find what curve will suit. Gordon's curve G with $a = 16$ and $b = \frac{1}{3000}$, evidently strikes an average, which he intended it should. Fidler objects to this treatment, holding that the curve should be made to fit the lower or worst results, and he has therefore devised a formula, too complicated for regular use, and shown by curve F F. Apparently,

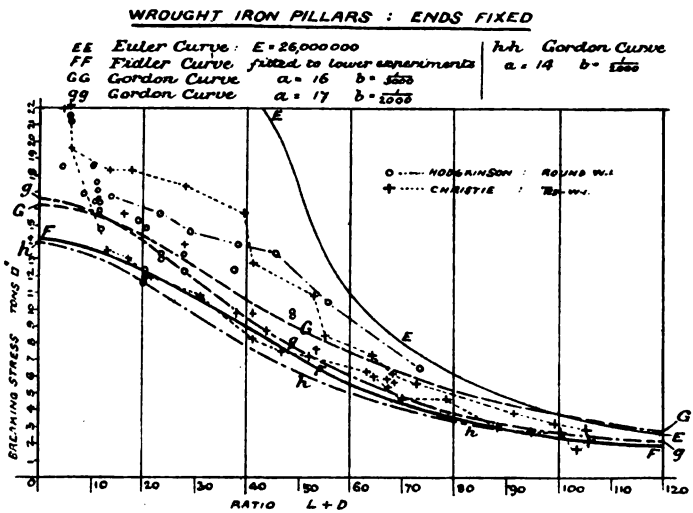

Comparison of Pillar formulæ.
Fig. 820.

however, a judicious alteration of Gordon's constants should approach Fidler's curve, for when $a = 17$ and $b = \frac{1}{2000}$, line gg is drawn; but if $a = 14$ and $b = \frac{1}{2000}$, the lower and safer line hh is obtained. Another way is to take f some 80 or 85% of Gordon, which would meet the experience of engineers.

P. 461. **Combined Torsion and Bending.**—We shall here show how the two stresses f_t and f_s are combined into one equivalent stress f_e. If a pair of shear stresses $F_1 F_1$, Fig. 821, act on an imaginary solid A B C D, within a structure, they cannot

Digitized by Google

exist alone, for they cause a turning effect. They must, therefore, be balanced by a second pair of stresses F_2F_2, where $F_1 \times AB = F_2 \times AD$, or $(f_1 \, AD) \, AB = (f_2 \, AB) \, AD$, and $f_1 = f_2$.

Let us next imagine a second block ABCD, Fig. 822, acted on by a shear stress f_s and a direct stress f_t. These may be balanced by the dotted stresses, but we shall consider them resisted by f_e and f_o on plane CB. Now if the value of θ be properly chosen, f_o may be entirely eliminated, and the forces

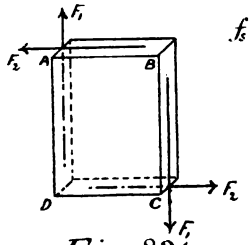

Fig. 821.

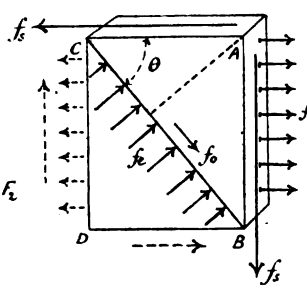

Fig. 822.

Combined Torsion & Bending.

on BC be solely direct, as f_e. Assuming this condition, and resolving $f_e \, CB$ on CA:

$$(f_e \, CB) \sin\theta = (f_t \, AB) - (f_s \, CA)$$

Dividing by CB: $f_e \sin\theta = f_t \sin\theta - f_s \cos\theta$

and $(f_e - f_t) \sin\theta = -f_s \cos\theta$ ..... (1)

Resolving $(f_e \, CB)$ on AB:

$$(f_e \, CB) \cos\theta = -f_s \, AB$$

Dividing by CB: $f_e \cos\theta = -f_s \sin\theta$ ..... (2)

Multiplying (1) and (2) together: $f_e^2 - f_e f_t = f_s^2$

and solving the quadratic: $f_e = \frac{1}{2}(f_t + \sqrt{f_t^2 + 4f_s^2})$

Inserting the values of f_t and f_s on p. 461:

$$f_e = \tfrac{1}{2}\left(\frac{B_m}{\frac{\pi d^3}{32}} + \sqrt{\left(\frac{B_m}{\frac{\pi d^3}{32}}\right)^2 + 4\left(\frac{T_m}{\frac{\pi d^3}{32}}\right)^2}\right)$$

whence $f_e \frac{\pi d^3}{16} = B_m + \sqrt{B_m^2 + T_m^2}$

Digitized by Google

which is the so-called equivalent twisting moment, although f_e is a direct stress and not a shear. The result is only true for round shafts, but can be used for other sections by adopting proper values of Z.

CHAPTER IX.

P. 474–8. **Velocity and Energy Curves.** Let any velocity curve, A, Fig. 823, be plotted to a base of equal times; then the acceleration f will be shown by the slope curve

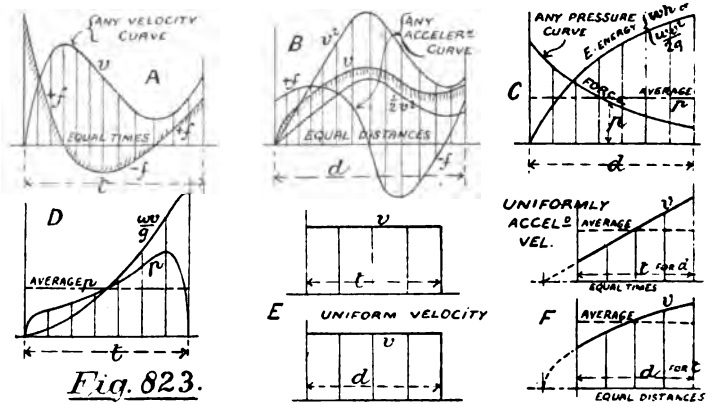

Fig. 823.

Velocity & Energy Curves.

(*see* p. 852) of v, and v will be the sum curve of f, for velocity growth $v = ft$. Hence *acceleration is rate of velocity change regarding time.* Again, at B, if an acceleration curve f be plotted to equal distances, $fd = \frac{1}{2}v^2$ (for $v^2 = 2fd$). Therefore curve $\frac{1}{2}v^2$ is the sum of f regarding d, and the double of these ordinates is v^2, from which v may be found. Conversely, v being known, f may be obtained directly, as on p. 492.

A curve of force at C will give an energy curve by summation, for energy $= pd$. Many applications occur: thus, if p be an indicator card, E will show foot pounds (Wh) given to piston, and

Digitized by Google

if E show energy as delivered from a rifle bullet ($Wv^2/2g$) while penetrating a target to depth *d*, the pressure exerted at any point will be shown by the *p* ordinates. Therefore *force is rate of energy change regarding distance.* If, however, the curve *p* be drawn to a time base as at D, summation will give momentum, or (Wv/g), for momentum = impulse or *pt*. Then, for a second definition, *force is rate of change of momentum regarding time.* These principles may be carried much further: thus, kinetic energy is the sum of $\frac{1}{2}v$ regarding momentum and so on.

Speaking next of curve averages, it will be easily seen that average velocity, for example, will depend on the base units, and that a time-base average can only equal a distance-base average in the case of uniform velocity, for their distances are proportional to times, and the curves are exactly alike (*see* E). Uniformly accelerated velocity is shown at F for both time and distance bases, and the average *v* is evidently less in the former than the latter. In like manner there are time- and distance-base averages of force, as at D and C respectively, a steam-engine-indicator mean pressure being a distance average.

P. 478. Energy Curves.

Example 63.—A steam piston of a horizontal engine is 30 ins. diameter, and the net propelling forces due to the steam in lbs. per sq. in., at 6 in. intervals of stroke, are as follows: 100, 98, 97, 96, 95, 79, 67, 57, 49, 43, 38, 34½, 31, 28, 25, 23, 21, &c. The resistances of load and friction are 19 tons, assumed constant, and the weight of the moving parts is taken at 6 tons. Find the correct length of stroke and draw the velocity curve. (Hons. Applied Mechs. Exam., 1897, slightly altered.)

Draw any horizontal base A B, Fig. 824, and set out the 6 in. spaces as shown. Erect verticals, plot total net steam pressure in tons = *p* (piston area ÷ 2240) = ·315 *p*, and draw hyperbolic curve C Q D. As the piston advances from left to right, the area under this curve shows total energy up to a given position. Summate then curve C Q D, and obtain curve A M F of total energy (*see* p. 860). The scale for B F is obtained from previous explanations Draw G H so that A G = P the total load resistance, = 19 tons. Now, energy absorbed by load is P × D, where D is the stroke swept out up to any point, and the summation of G H, with same pole P, gives A L J, the curve of load energy measurable to same scale as B F. But generally—

Digitized by Google

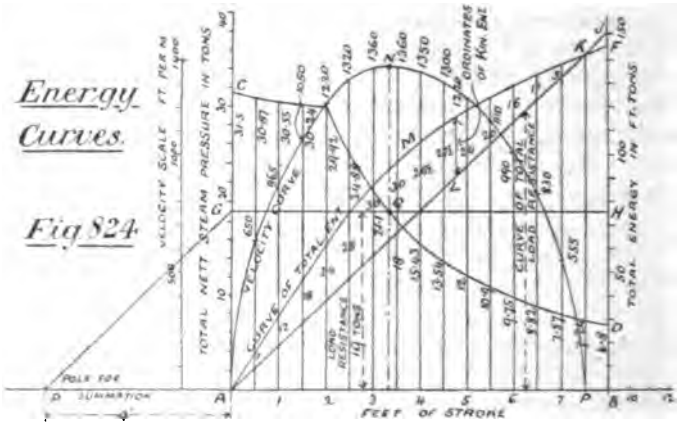

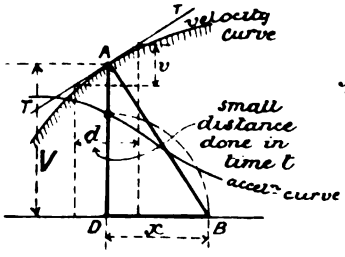

Acceleration curve by Proell's method.

Fig. 825.

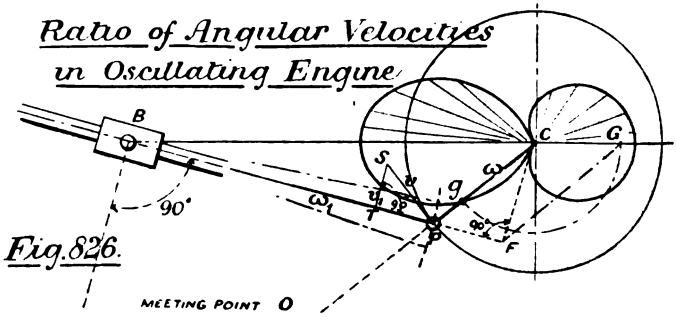

Fig. 826.

Digitized by Google

Total energy = Potential energy + Kinetic energy, and

$$\text{Total steam energy} = (\text{P} \times \text{D}) + \frac{wv^2}{2g}$$

where w = weight of moving parts. Hence, as ordinates A M F B show total energy, and A L J B the load energy absorbed, the remaining ordinates, by deduction, viz., those of A M K L, will indicate kinetic energy of moving parts. Now,

$$\frac{wv^2}{2g} = \text{K.E.} \quad \therefore v = \sqrt{\frac{\text{K.E.} \times 2g}{w}} = \sqrt{\text{K.E.}} \times 4{\cdot}14$$

$$\text{and V} = \sqrt{\text{K.E.}} \times 24{\cdot}8$$

where energy is in foot tons, and $w = 6$ tons. Next, ordinates of K.E. are measured on A L K, and velocity curve found by calculation. The stroke will finish at P, directly under K, where v equals o; and the maximum velocity is at N, vertically over Q, where load and steam curves cross. Cut off occurs at $\frac{1}{15}$ of stroke A P.

P. 492. **Acceleration Curves.**—It was shown at p. 492 how to construct an acceleration curve to a distance base. The proof will here be given by reference to Fig. 825. Let V be a velocity ordinate, whose growth v in a small portion of time t takes place at A; also let a small distance d be traversed during time t. T T is a tangent to the curve, and A B a normal; then D B or x will show the acceleration f, for

$$f = \frac{v}{t} = \frac{v}{d} \times \frac{d}{t}$$

But $\frac{d}{t}$ = velocity V, for space = tv

and $\frac{v}{d} = \frac{x}{\text{V}}$ by similar triangles. Substituting

$$f = \frac{v}{d} \times \frac{d}{t} = \frac{x}{\text{V}} \times \text{V} = x$$

The construction cannot be reversed to find v, but $\frac{1}{2}v^2$ may be found by summation, and v be therefrom deduced.

P. 496. **Comparison of Angular Velocities in Linkwork.**—In pp. 490–496 are found the *linear* velocities of points in linkwork. But it is often convenient to know the ratios of *angular* velocities in a pair of links, and two cases will here

Digitized by Google

be investigated, as examples of slider-crank and quadric-crank chains respectively.

Fig. 826 is the linkwork of an oscillating engine, where C P is the crank and B P the piston rod, and the ratio ω of C P to ω_1 of B P is required. Linear velocity of P, normally to C P $= v$, and normally to B P $= v_1$. Now if $v =$ S P, $v_1 =$ S T, and

$$\omega_1 = \frac{S\,T}{B\,P} = \frac{S\,T}{B\,P} \cdot \frac{v}{v} = \frac{S\,T}{B\,P} \cdot \frac{v}{S\,P}$$

But by similar triangles $\dfrac{S\,T}{S\,P} = \dfrac{B\,P}{O\,P}$

$$\therefore\ \omega_1 = \frac{B\,P}{B\,P} \cdot \frac{v}{O\,P} \quad \text{and } v = \omega_1 \cdot O\,P$$

Again, $v = \omega \times$ rad. $= \omega \cdot C\,P$

$$\therefore\ \omega \cdot C\,P = \omega_1 \cdot O\,P$$

Produce B P to F, and draw C F at right angles to B F.

Also draw G F $\parallel$ C P, making triangles B F G, B P C similar.

Finally $$\frac{\omega}{\omega_1} = \frac{O\,P}{C\,P} = \frac{B\,P}{P\,F} = \frac{B\,C}{C\,G}$$

or, if B C be angular velocity of crank, C G is that of piston rod. Then, if C G be turned round to g, a point is found in a polar curve of angular velocity of B P when ω is constant.

In the quadric crank, Fig. 827, let O be the virtual centre. Then $\omega \cdot A\,P = v$, and $\omega_1 \cdot B\,Q = v_1$. Draw A L $\parallel$ B Q, making triangles O P Q and A P L similar. Also produce Q P to S, making triangles S A L and S B Q similar.

$$\frac{\omega \cdot A\,P}{\omega_1 \cdot B\,Q} = \frac{v}{v_1} = \frac{O\,P}{O\,Q} = \frac{A\,P}{A\,L}$$

or $$\frac{\omega}{\omega_1} = \frac{A\,P \cdot B\,Q}{A\,P \cdot A\,L} = \frac{B\,Q}{A\,L} = \frac{B\,S}{A\,S}$$

If the chain be that of a beam engine, ω is constant and represented by B Q, while ω_1 is shown by A L. Turn A L round on to line A P, and a point l is found in a polar curve which shows ω_1 for any position of crank A P.

P. 502. **Efficiency of Transmission by Shafting.**—The

Digitized by Google

work lost in shafting varies greatly, the limits being 25 to 50% of the power given; but one should distinguish between instantaneous efficiency and that averaged over, say, a whole day.

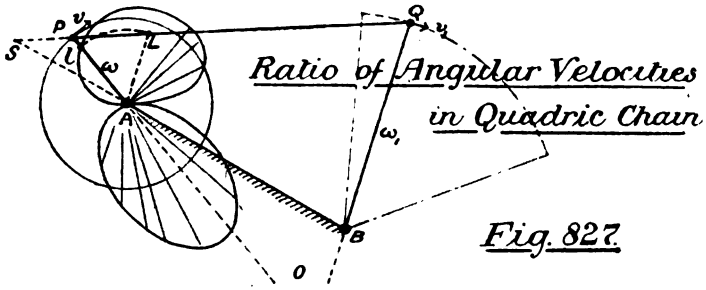

Ratio of Angular Velocities in Quadric Chain

Fig. 827.

An extreme case of loss is recorded in Fig. 828, which shows the H.P. curve of an American workshop during one day.

Neglecting engine friction,

		Utilised.	Lost.
Best results for shafting	=	43%	57%
Average results	=	36%	64%

The highest H.P. given to shafting and machines was 44, and the average 39. The machines were next driven by electric motors, with the result shown, the highest H.P. given to dynamos,

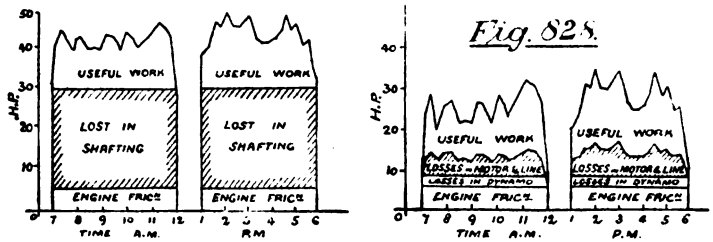

Fig. 828.

Shafting v. Electric Transmission

motors, and machines being reduced to 29 and the average to 21.

Neglecting the engine loss, as before,

		Utilised.	Lost.
Best results for electric driving	=	64%	36%
Average results	=	62%	38%

Digitized by Google

The advantage of the alteration is self-evident, being largely due to the fact that with electric driving the principal losses vary with the load, and are not constant as with shafting.

P. 504. **Velocity-ratio in Hooke's Joint.**—Given a universal or Hooke's joint, its construction is essentially that of two forks pivoted to a cross, as in Fig. 829. Now let circle P T Q show plane of motion of P and Q, while P R Q (an ellipse in elevation, but really a circle) indicates that of S and R. Let P move to P_1 while R moves to R_1; then angles P O P_1 and R O R_1

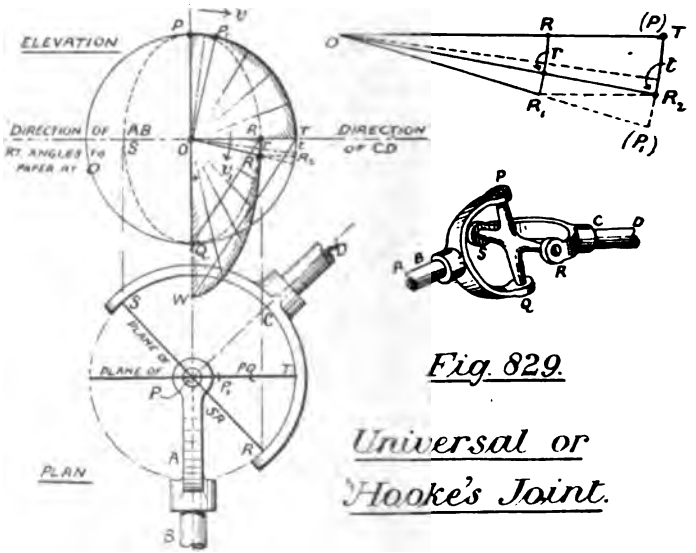

Fig. 829.

Universal or Hooke's Joint.

are equal, the latter being that apparent in elevation and not the real one on plane S R. Draw $R_1 R_2 \parallel R T$, and join O R_2. T O R_2 is the real angular motion of R, while that of P is P O P_1. Calling P's velocity v, and R's velocity v_1:

$$\frac{v}{v_1} = \frac{P P_1}{T R_2} = \frac{P P_1}{R R_1} = \frac{O t}{O r}$$

When P arrives at T, and R at Q, the velocity relations are exactly reversed, for the fork positions have simply interchanged. Join R Q and draw T W $\parallel$ R Q, thus making O R : O T :: O Q : O W; and complete the quarter ellipse R W. Then the radii vector O P

Digitized by Google

to O T shew angular velocity of driver A B, taken constant, while O R to O W show varying angular velocity of follower C D. For, work done being equal, area O P T must equal area O R W, which is only true for circle and ellipse respectively. Thus, area of circle $= \pi (\text{O T})^2$, and area of ellipse $= \pi (\text{O R}) (\text{O W})$, which is $\pi (\text{O T})^2$ by construction.

P. 517. **Rolling Curves.**—Other curves may be produced in the manner described at p. 517. Thus, when a parabola is rolled on a straight line, its focus describes a *catenary*, the curve in which a chain hangs, and whose equation is

$$y = \frac{m}{2}\left(e^{\frac{x}{m}} + e^{\frac{-x}{m}}\right)$$

where $e = 2{\cdot}718$, and m is a constant depending on the depth of hang. The ordinate is y and the abscissa x. The *tractrix*, or anti-friction curve, is the involute of the catenary.

P. 528. **Tension of Belts.**—Let the arc θ, Fig. 830, of

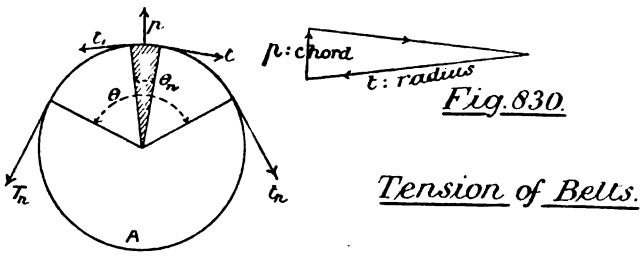

Fig. 830.

Tension of Belts.

the pulley A, be wrapped by a belt, the greatest pull T_n being balanced by t_n + friction. Considering a small elemental strip θ_n, the tensions t_1 and t are balanced by pressure p, and $t_1 = t$ approximately. By force diagram

$$\frac{p}{t} = \frac{\text{chord}}{\text{radius}} = \theta_n \qquad \text{and } p = t\theta_n$$

Frictional resistance on small arc $= p\mu$

$$\therefore p\mu = \mu t \theta_n$$

Digitized by Google

which is the small increase of tension for arc θ_n. Hence we may write

$$dt = \mu t \theta_n \qquad \text{and} \quad \frac{dt}{t} = \mu \theta_n$$

Summating each side of the equation separately, over the whole angle,

$$\text{Log}_\varepsilon \left(\frac{T_n}{t_n}\right) = \mu \theta$$

But if $\left.\begin{array}{l} \log_b x = a \\ x = b^a \end{array}\right\} \quad \therefore \frac{T_n}{t_n} = \varepsilon^{\mu\theta}$ and $\text{Log}_{10}\left(\frac{T_n}{t_n}\right) = \cdot 4343\, \mu \theta$

P. 555. **Friction.**—Experiments on solid friction may be classified under six heads:—

1. Static friction.
2. Friction at low speeds.
3. Friction at high speeds.
4. Journal friction.
5. Collar friction.
6. Pivot friction.

And in every case the surfaces may be wholly or partially lubricated, may be dry, or may be coated with a resistant. The first three are usually taken with flat surfaces, and the results known as 'flat friction,' unit pressure being constant over the surface. In the remaining cases the surface pressure may be very unequal.

The friction at starting, called friction of repose or static friction, has been but little examined, but some good results were obtained in 1895 by Mr. Broomall, of America, being the averages of twenty or thirty trials with each load.

VALUES OF μ FOR STATIC FRICTION.

Material.	Dry.	Wet.
Cast iron on cast iron	·3114	·3401
Steel on steel	·4408	
Steel on cast iron	·2303	
Cast iron on tin	·4541	
Steel on tin	·3648	
Cast iron on pine	·4702	
Pine on pine	·4738	·6350

Digitized by Google

The extreme cases were from ·96 to 1·04 times these numbers, but at certain loads the values became constant. As p increased μ decreased, except with dry pine on pine, when the reverse occurred. The effect of long contact was to slightly increase μ with the dry experiments, and markedly so with wet pine on pine.

For low-speed friction, Morin's results may be accepted. The method of experiment is to find a load P which will just keep a weight W moving at a slow uniform speed on a level

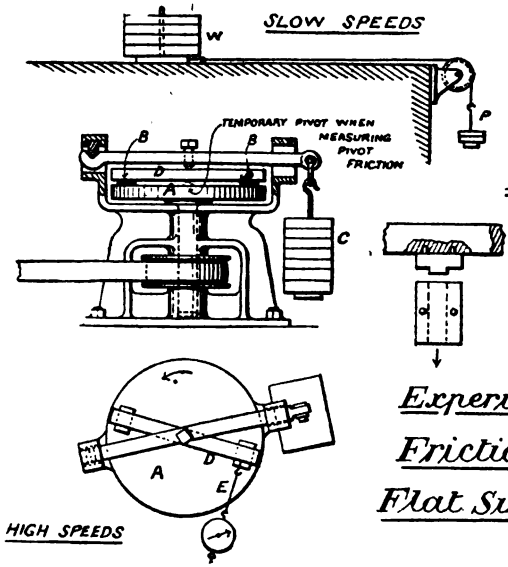

Fig. 831.

Experiments on Friction of Flat Surfaces.

surface, Fig. 831: then the ratio $P : W = \mu$, and very regular results are obtainable.

At high speed somewhat conflicting figures are found. Apparently there is a decrease in friction with increase of speed if the surfaces are dry (p. 556), or rather, at high speeds the friction seems to approach the lubricated cases, most probably due to a cushion of air drawn in between the surfaces. High-speed lubricated experiments are troublesome, because the

Digitized by Google

lubricant alters with the temperature, every oil having a best condition, but the results of flat friction at linear velocities from 400 to 1600 ft. per m. show a constant μ of ·23 at 50 lbs. per sq. in.: for cast-iron surfaces. The apparatus is shown in Fig. 831, where A is a rotating disc, and B B two rubbing surfaces (shown in detail on the right) pressed upon it by the load C. The turning effort of D is resisted by string E, and F_n measured by spring-balance or scale-pan weights.

Beauchamp Tower's journal experiments for the Inst. of Mech. E. were made at high speeds with heavy loads, and the projected area ld adopted for measurement of unit pressures, d being width of journal embraced, and l its length. The nominal p was thus conventional, the real p often rising to twice its amount. The load was carried on a knife-edge K, Fig. 832, and C K would assume some position C L. Then

$$\text{Moment of friction} = \text{Moment of weight}$$
$$F_n r = Pa$$

The movement was multiplied by levers A and B, but still being small, was measured by weights in a scale-pan D sufficient to bring B back to zero. The starting stickiness was overcome by a small weight E, and the lever thus kept horizontal for zero load, the amount being decided by revolving in each direction and taking the average. Briefly, total friction was found constant at all loads, and μ varied as $1 \div P$. Oil-bath lubrication proved best, sponge lubrication some four times as resistant, and siphons gave still worse results. Temperature materially altered the friction; thus by lowering from 300° to 120° Fahr. the friction with lard oil was as 1 : 3. By means of pressure gauges it was shown to be useless to introduce the lubricant where pressure was greatest, for the latter often rose to 200 lbs. per sq. inch and forced out the oil. Oil should therefore enter at the top of shafts and the bottom of axles, and grooves be cut to assist it. (*See Third Preface.*)

With collar bearings (Inst. Mech. E. experiments) the friction varied more nearly with the pressure, the apparatus being shown in Fig. 832*a*. A ring C supported on rollers J J, was pressed

Digitized by Google

between discs A and B by the force of a screwed-up spring H, the amount of pressure being measured by pointer H, and the bolt F having a spherical seat. Both discs being connected by keys K K,

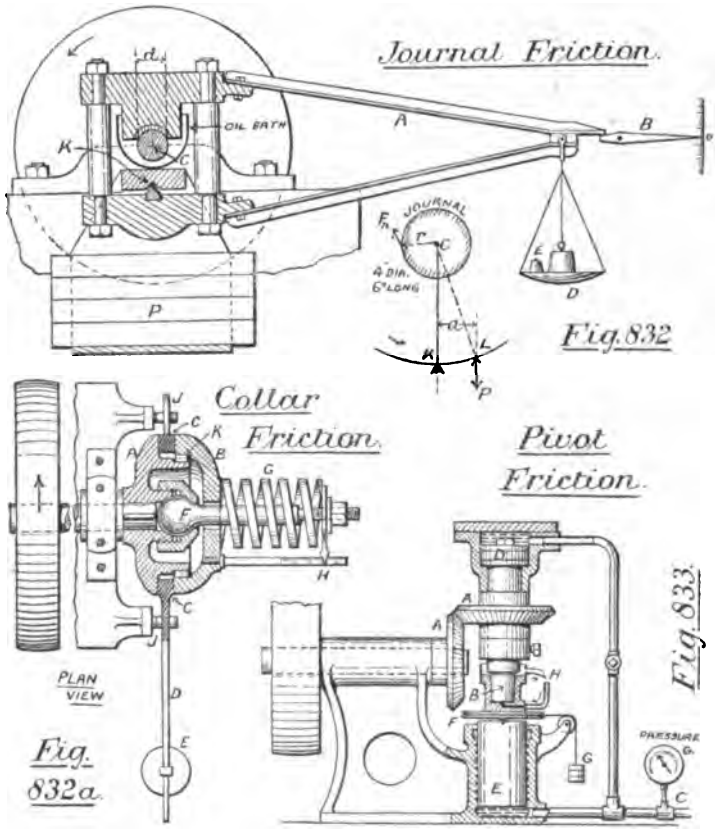

are revolved by belting, and the friction between the two surfaces is measured by weight E, in the manner of a dynamometer (see also p. 558). In marine practice pressures of 50 lbs. per sq. in. are allowed on thrust-block collars, and the H.P. transmitted to

Digitized by Google

the screw taken at $\frac{2}{3}$ the I.H.P. The direct thrust may be found from speed, for

$$\text{V of ship} = \text{knots} \times 101{\cdot}3$$

$$\text{Thrust} \times \text{knots} \times 101{\cdot}3 = \text{effective H.P.} \times 33000$$

$$\text{or } P = \frac{(\text{eff. H.P.}) \times 33000}{K \times 101{\cdot}3} = 217\ \frac{\text{I.H.P.}}{K}$$

$$\therefore \text{ Collar surface required} = \frac{217\ \text{I.H.P}}{50\ K} = 4{\cdot}34\ \frac{\text{I.H.P.}}{K}$$

It must be noted that these surfaces are now horseshoe in form (see p. 691) and more collars are required than if circular.

For pivot bearings the experimental apparatus in Fig. 833 was adopted, where B is the pivot or footstep fed by oil entering at pipe H. The shaft D being rotated through bevel gearing A A, the frictional moment was measured by weight G. which, acting on pulley F, prevented the bearing at B from rotating. At the same time, the load was obtained by oil pumped against surfaces D and E, its intensity being measured by pressure gauge C.

P. 568. **Balls and Live Rollers.**—It is found that with ball or roller bearings the frictional loss is $\frac{1}{8}$ or $\frac{1}{7}$ of that of a plain journal, and in large bearings the rollers are kept apart by rings, as in Fig. 584.

P. 575. **Efficiencies of Machines.**—The example on pp. 571 to 575 shows the methods usually followed in mechanical laboratories to find frictional loss in machines. Two further cases may be given by way of illustration. Fig. 834 is a chart of experiments on rope-pulley blocks, a simple fixed pulley being called a 1 : 1 system, one movable and one fixed block a 2 : 1 system, and so on. Thus 3 upper and 3 lower pulleys make a 6 : 1 system. Plotting P : W the inclined lines are obtained, and efficiency curves are further calculated for each load. A curve of *maximum* efficiency is also drawn below, on a base of velocity-ratio, which usefully indicates the rapid loss with increased theoretical advantage. The sheaves were $2\frac{1}{2}''$ diameter and the rope $\frac{1}{2}''$.

Investigating, we have in a 1 : 1 system :

$P = W(1 + m)$ where m is a proper fraction.

Digitized by Google

Then, in a 3 : 1 system, say :

$$P_1 = P_2(1+m) \ldots\ldots P_2 = P_3(1+m) \ldots\ldots P_3 = P_4(1+m) \quad \ldots\ldots(1)$$

Adding each side*:

$$P_1 + P_2 + P_3 = (P_2 + P_3 + P_4)(1+m)$$

$$\text{or} \quad P_1 = m(P_2 + P_3 + P_4) + P_4$$

But since all the rope tensions together = W

$$P_2 + P_3 + P_4 = W$$

$$\text{and} \quad P_1 = P_4 + mW \quad \ldots\ldots\ldots\ldots\ldots\ldots(2)$$

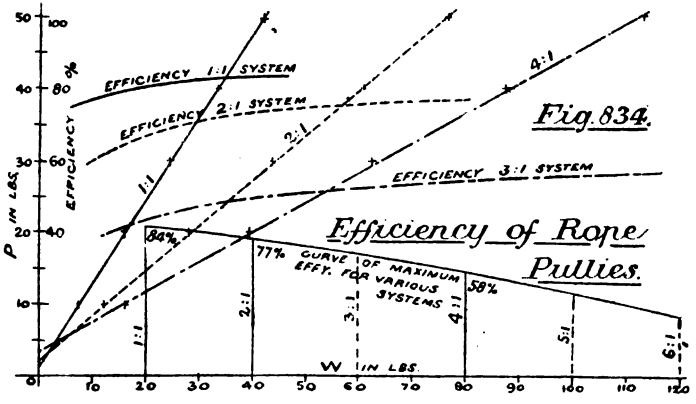

Again, multiplying sides together in (1):

$$P_1 P_2 P_3 = P_2 P_3 P_4 (1+m)^3 \qquad \therefore P_1 = P_4(1+m)^3$$

$$\text{and} \quad \frac{P_1}{(1+m)^3} = P_4 \quad \ldots\ldots\ldots\ldots\ldots\ldots(3)$$

Substituting this in (2)

$$\left.\begin{aligned} P_1 &= \frac{P_1}{(1+m)^3} + mW \\ \text{or} \quad P_1\left(1 - \frac{1}{(1+m)^3}\right) &= mW \end{aligned}\right\} \quad \text{for a 3 : 1 system} \quad \ldots\ldots(4)$$

$$\text{or generally} \quad \frac{W}{P} = \frac{1 - \frac{1}{(1+m)^n}}{m}$$

* P_1, P_2, P_3 are the rope parts taken in order from P to W. See Fig. 439.

Digitized by Google

where the exponent n represents the number of cords; and the *real* advantage is thus shown. The assumption, however, that pulley friction and rope-bending resistance vary similarly is not quite true, the latter increasing more rapidly than the former. Comparing with experiment,

$$1:1 \text{ block}; \quad m = \frac{P-W}{W} = .195 \quad \text{at max. effy.}$$

$$2:1 \text{ block}; \quad \frac{W}{P} = \frac{1-\frac{1}{(1+m)^2}}{m} = 1.54$$

which, by experiment = 1·52 at max. effy.

$$4:1 \text{ block}; \quad \frac{W}{P} = \frac{1-\frac{1}{(1+m)^4}}{m} = 2.62$$

which, by experiment = 2·25 at max. effy.

In the case of a screw jack, well oiled, the friction of the un-

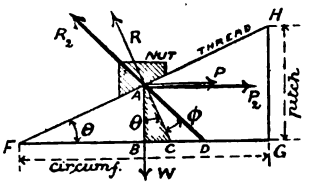

Efficiency of Screw.

Fig. 835.

loaded machine was scarcely perceptible, and the P : W line passed through the origin. The efficiency was therefore constant at all loads, being ·3535 with a screw 1·92″ mean diameter and pitch ½″, the velocity ratio being 59·33 : 1. The lever was represented by a pulley mounted on the screw axis. Here again the efficiency can be found by calculation. Let F G, Fig. 835, be the mean screw circumference, and H G the pitch, the nut being moved by force P. Neglecting friction, there are three balancing forces, P, R, and W; and the force diagram is A B C.

$$\frac{W}{P} = \frac{AB}{BC} = \frac{\text{circumference}}{\text{pitch}} = \frac{1}{\tan\theta}$$

Digitized by Google

With friction, the real resistance is R_2, and the force diagram A B D, where ϕ = friction angle.

$$\frac{W}{P_2} = \frac{A B}{B D} = \frac{1}{\tan(\theta+\phi)}$$

$$\text{and efficiency} = \frac{P}{P_2} = \frac{\tan\theta}{\tan(\theta+\phi)}$$

showing that large pitch is economical. Returning to the experiment,

$$\tan(\theta+\phi) = \frac{\tan\theta}{\text{effy.}} = \frac{\cdot083}{\cdot3535} = \cdot235$$

$$\therefore \phi = (\theta+\phi) - \theta = 13\cdot27^\circ - 4\cdot76^\circ = 8\cdot51^\circ$$

$$\text{and} \quad \mu = \tan\phi = \underline{\cdot1494}$$

P. 576. **Absorption Dynanometer.**— The apparatus in Fig. 596 is called an Appold brake. If P = pull on stud D, r = radius of brake wheel, and F_n total friction on brake strap, the sum of moments being necessarily zero,

$$(W - S)\,R \pm (P \times A\,D) = F_n r$$

or the total moment exerted by the engine. P may be measured by two spring balances, one on each side of D, a pull on the right balance being plus, and on the left minus. The work absorbed per revolution would be

$$2\pi\{(W - S)R \pm (P \times A\,D)\}$$

whence B.H.P. is found. If the H.P. be under 15 and the lubrication sparing, there is little pull on D, but the lever is generally a bad arrangement, and a simple strap is now advised, where only W and S are measured.

P. 580. **Distribution of Power.**—We may distinguish between mere transmission, and distribution from a central station to many consumers. Professor Unwin has shown the advantages of the latter over individual installations, and gives the following requirements :

1. Indefinite subdivision and measurement.
2. Minimum first cost and running loss.
3. Freedom from danger.

Digitized by Google

4. Consumer's motor to be simple and efficient.
5. Facility for adaptation to numerous uses.

Only two great natural sources of power have been much used up to the present, gravity and heat, the former being the water power of streams, and the latter the latent energy of coal or petroleum. The distributors have been electricity, wire rope, compressed air, hydraulics, or coal gas; of which probably compressed air meets the above requirements most perfectly. Intermittent use means the necessity for storage if a part of the plant is not to lie idle at times, and electric accumulators are very costly for large stations, but hydraulic power may be efficiently stored. A low-pressure water power is used in Switzerland, drawn from reservoirs 400 ft. high kept filled by turbines, and lately the storage of heat has been accomplished by admitting surplus boiler steam to a large vessel of water under high pressure, the liquid thus heated being converted into steam when needed, at a small reduction of pressure.

CHAPTER X.

P. 583. **Conduction of Heat through Plates.** — The boiler furnace having a temperature of about 1500°, and the steam of 300°, it may be taken that there is a 'skin' drop of 500° on each side, and another drop of 300° in passing through the plate.

P. 587. **Le Chatelier's Pyrometer** is undoubtedly the finest modern apparatus for measuring high temperatures, and, as improved by Roberts-Austen, is shown in Fig. 836. A is a thermo-electric couple of two wires, twisted together, one of platinum and the other of platinum alloyed with 10% of rhodium. Being protected with refractory material, they are placed in a source of heat, and connected to the mirror galvanometer B, within the camera C. A ray of light from an oxy-hydrogen burner D is deflected and focussed on to the mirror E, from which it returns to a photographic plate F. Now the horizontal movement of the light ray at F will indicate temperature: but a better way is to cause the plate F to move vertically by clockwork while the heat changes occur at

Digitized by Google

A, thus recording a time-temperature curve. The temperature scale is graduated by reference to well-known phenomena, whose

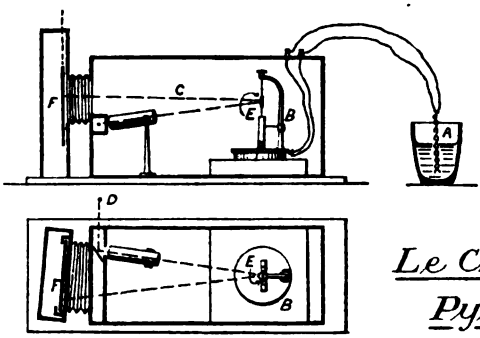

Fig. 836.

Le Chatelier's Pyrometer.

temperatures have been accurately obtained by the methods on p. 587, and the junction at A should directly touch the source of heat.

P. 593. **Steam Drier or Separator.**—This apparatus is now considered essential to an engine steam-pipe, especially if the

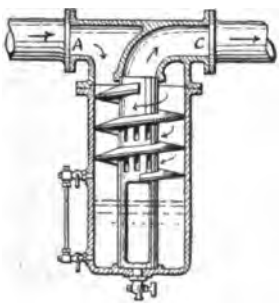

Steam Drier or Separator.

Fig. 837.

length of the latter be great, and the principles embodied in various forms may be illustrated by Fig. 837. Steam enters at A, and in passing round the helix to escape at C, deposits all the moisture on the casing wall by centrifugal action, only dry steam passing away.

Digitized by Google

P. 594. **Dryness of Steam.** — The finding of dryness value from indicator diagram has already been shown at p. 764. Professor Carpenter plots a further curve beneath the expansion line to represent the fractions thus obtained, and calls this the 'quality' curve of the steam. It appears that condensation continues after cut-off A, Fig. 838, till re-evaporation is reached at B,

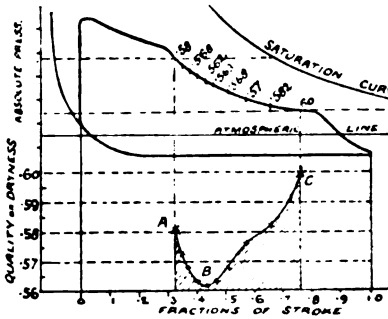

Fig. 838.

Dryness- or Quality-curve.

while the final dryness C is often higher than A. To measure the condensation due to cylinder walls we must know the original condition of the steam. Several methods are used, but Carpenter's apparatus, Fig. 839, is probably simplest, while being very

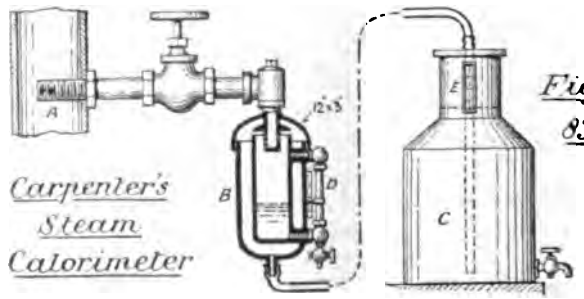

Carpenter's Steam Calorimeter

Fig. 839.

accurate. Steam passes from the pipe A into a jacketed separator B, where all the moisture is deposited. Continuing to the water vessel C, the dry steam is there condensed, and the graduations

Digitized by Google

at E and D will respectively show weights of dry steam and entrained water.

P. 605. **Problems on Energy Changes in a Working Gas.**—When a gas is expanded or compressed in any manner behind a working piston,

Heat supplied = change of internal energy + external work

and any of the three terms may be plus, minus, or zero. Thus, when expanding isothermally, the internal change is zero, and the gas must be given a positive heat equal to the total work done (p. 605); and in isothermal compression the heat supply is negative, that is, must be abstracted to the same amount as before.

Example 64. Assuming the $p\,v$ curve to be hyperbolic, let steam enter the cylinder at 120 lbs. absolute pressure per square in., temperature 348° F., and expand to 30 lbs. absolute, temperature 250° F. Find heat supplied per lb. weight. (Hons. Steam Exam. 1894.)

Spec. vol. at 250° = 13·5 cub. ft. and P = (144 × 30) lbs.

$\therefore$ P V = 144 × 30 × 13·5 = 58320 ft. lbs.; which is constant.

$$r = \frac{V_2}{V_1} = \frac{P_1}{P_2} = \frac{120}{30} = 4 \qquad \text{and } \log_e r = 1{\cdot}3863$$

Total heat at first, $H_1 = S_1 + L_1 = 348 - 32 + 871 = 1187$ B.T.U.

Total heat at end, $H_2 = S_2 + L_2 = 250 - 32 + 940 = 1158$ B.T.U.

Loss of internal energy = 772 $(H_1 - P V) - 772\,(H_2 - P V)$

= 21616 ft. lbs.

$\therefore$ Heat supplied = external work − internal change

= PV $\log_e r - 21616$ = (58320 × 1·3863) − 22388

= 59233 ft. lbs., or 76·72 B.T.U. per 13½ cub. ft., or per 1 lb. weight.

[N.B.—The real result should be 87 B.T.U., the discrepancy being due to assuming the expansion of dry steam as hyperbolic.]

Example 65.—Find expressions for the thermal efficiency, when atmospheric air at 60° Fahr. is compressed adiabatically, then cooled under constant pressure to 60° Fahr., and afterwards exhausted adiabatically while doing work, till it reaches the atmospheric pressure again.

Referring to Fig. 840, O D and O F are scales of absolute pressure and volume respectively. Air is drawn in along A B, compressed to C

Digitized by Google

and discharged along C D, the pressure again falling to A. The work done *on* the air is the area A B C D. Similarly, in the motor, we admit along D G, expand from G to H, and discharge along H A, the pressure rising again to D. The work done *by* the air is D G H A.

$$\therefore \text{ Efficiency} = \frac{\text{work returned}}{\text{work expended}} = \frac{\text{D G H A}}{\text{A B C D}}$$

and these areas are to be measured. For any pressure P, $PV^{\gamma} = C$

$$\therefore \frac{PV_a^{\gamma}}{PV_b^{\gamma}} = \frac{C_a}{C_b} \quad \text{and} \quad \frac{V_a}{V_b} = \text{a constant}$$

which is true anywhere on the adiabatics. Imagine the areas cut into horizontal strips, each of a very small width c, and let a = area of

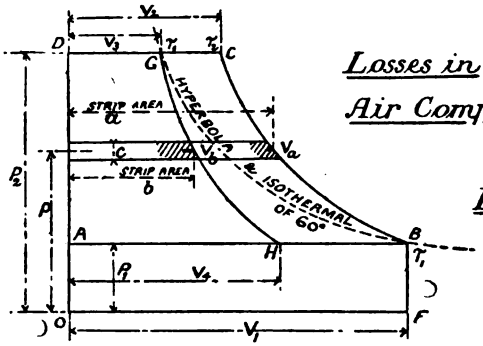

Losses in Air Compression.

Fig. 840.

one strip to V_a, while b is that to V_b. Then $a = c V_a$ and $b = c V_b$. Sum the strips for the whole areas, and let $V_a = R V_b$.

$$\frac{\Sigma b}{\Sigma a} = \frac{c \Sigma V_b}{c \Sigma V_a} = \frac{\Sigma V_b}{\Sigma V_b R} = \frac{1}{R} = \frac{V_b}{V_a}$$

$$\therefore \frac{\text{Area D G H A}}{\text{Area A B C D}} = \frac{V_b}{V_a} \quad \text{and} \quad \eta = \frac{V_3}{V_2} \quad \text{or} \quad \frac{V_4}{V_1}$$

Now suppose ratio of compression $\frac{V_1}{V_2} = r$

Then by p. 607 $\frac{\tau_1}{\tau_2} = \left(\frac{1}{r}\right)^{\gamma - 1}$

But, by changing from τ_2 at C to τ_1 at G by constant pressure, we have, by Charles' law:

$$\frac{V_3}{V_2} = \frac{\tau_1}{\tau_2} = \left(\frac{1}{r}\right)^{\gamma - 1} \quad \text{and} \quad \eta = \left(\frac{V_2}{V_1}\right)^{\gamma - 1}$$

Digitized by Google

Again, suppose the air to be compressed from 1 to x atmospheres,

$$\frac{P_1}{P_2} = \left(\frac{V_2}{V_1}\right)^{\gamma} \qquad \text{Raising to the } \frac{\gamma-1}{\gamma} \text{ power,}$$

$$\left(\frac{P_1}{P_2}\right)^{\frac{\gamma-1}{\gamma}} = \left(\frac{V_2}{V_1}\right)^{\gamma-1} \qquad \therefore \eta = \left(\frac{P_1}{P_2}\right)^{\frac{\gamma-1}{\gamma}} = \left(\frac{1}{x}\right)^{\frac{\gamma-1}{\gamma}}$$

We may deduce some important results from the last two examples. If a gas be compressed or expanded in any manner, and then returned to the original temperature, the heat supplied or removed must equal the work area as indicated, for the internal energy is then unchanged. Fig. 841 is a general diagram for air-

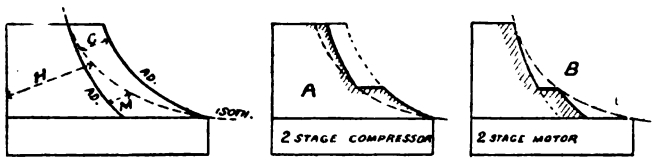

Fig. 841. Air-Compression Systems.

compressor and motor, and we may take three cases:—

I. { Adiabatic compression: cooling back to isothermal: heat lost... = H + C
Adiabatic expansion: work gained (from gas) = H − M

$\therefore$ Total loss in system = (H + C) − (H − M) = C + M

II. { Isothermal compression: no cooling: heat lost = H
Adiabatic expansion: work gained ... = H − M

$\therefore$ Total loss in system = H − (H − M) = M

III. { Isothermal compression: heat lost... = H
Isothermal expansion: { heat to be supplied = H, work gained ... = H } loss = 0

$\therefore$ Total loss in system ... = H

The isothermal line is most closely approached by two-stage compressors (p. 547), and by two-stage motors, whose diagrams are given at A and B respectively, Fig. 841; but in the second it must be understood that all the external work must be supplied

Digitized by Google

by re-heaters, the only reason for whose success lies in the remarkable economy of heat thus supplied, some six times as efficiently as when used in a steam boiler.

P. 605-8. **Plotting the Curve $pV^n = C$.**—The pressure for given volume, or volume for given pressure, can be found by using a table of logarithms, for

$$\log p + n\log V = \log C$$

$$\therefore \quad \log p = \log C - n\log V$$

$$\text{and} \quad \log V = \frac{\log C - \log p}{n}$$

[Note that common logs. are used.]

The values p or V may then be deduced, being the numbers corresponding to their logarithms. Or, again, the values n and C for a given curve, may be found by construction. Taking the given expansion curve, Fig. 842, measure every pressure and

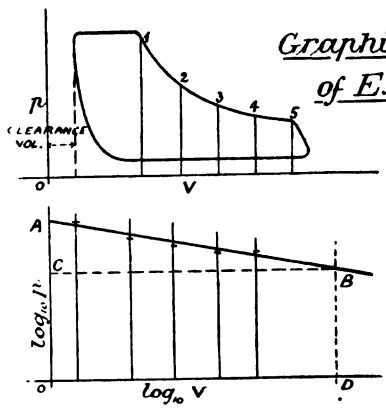

Graphic determination of Expansion-curve Equation.

Fig. 842.

volume at any points 1, 2, 3, 4, 5, and, on a new diagram, shown below, plot their logarithms, drawing the best straight line A B through the plotting. Then

$$n = \frac{A\,C}{C\,B} \qquad \text{and} \quad \log p + \frac{A\,C}{C\,B}\log V = \log C$$

Putting in the values for $\log p$ and $\log V$, taken anywhere, $\log C$

Digitized by Google

is obtained; and C, the corresponding number, is taken from the tables.

P. 611. **Thermal Efficiency of Steam Engines.**—It is now practically agreed that engine efficiency should be measured apart from the boiler, and the two efficiencies multiplied if the whole economy be required. There having been some disagreement as to measurement of the first, a committee formed in 1897 by the Inst. C.E., after consideration, reported that the efficiency of a steam engine should be stated by

I. Number of B.T.U. per I.H.P. per hour:
II. Number of B.T.U. per B.H.P. per hour:
III. Comparison of heat consumption with that of an ideal cycle, and called 'Comparison ratio' (see rel. effy. p. 772):

all three being given if possible. The B.T.U. are to be measured by taking steam temperature before entering engine stop-valve, and again when entering exhaust pipe; then reckoning the heat required to raise the weight of steam used, from water at exhaust to steam at initial temperature, under constant pressure. The ideal cycle for steam is to be taken as the 'Rankine' cycle, which is only different from Carnot, p. 772, in having no compression, and being therefore non-reversible. There is little difference between the two when using saturated steam, but with superheated steam the Rankine efficiency is much less. As the Carnot formula is much simpler, it may be used for approximation in many cases. Then

$$\text{Comparison ratio} = \frac{\text{B.T.U. by Rankine or Carnot}}{\text{B.T.U. actually used.}}$$

P. 612. **Reversible Cycles.**—Cotterill shows that when the exhaust steam is used to heat the boiler feed, the cycle is much more nearly reversible. Further, that if Weir's system of feed heating in stages be adopted, by steam drawn from the intermediate receivers of multiple-stage compounds, a still better cycle is obtained, reaching ideal conditions if the number of stages be infinite. The method is then exactly similar to Stirling's, p. 771, the receivers acting as regenerators or temporary heat stores.

Digitized by Google

P 614. **Calculation of Initial Condensation and Leakage.**—The weight of steam used in addition to that shown by the indicator is a loss spoken of as the 'missing quantity,' and is ascribed to cylinder condensation and leakage. The researches of Hirn, D. K. Clark, Willans, Cotterill, Thurston, Donkin, Adams, English, and Callendar have been directed towards the rationalisation of this loss, in order to predict it in any case where the conditions of pressure, speed, clearance, expansion, &c., are known. Donkin, Adams, and Callendar have experimentally obtained temperature cycles of the steam and the cylinder walls, which fully show the interchanges that have been generally admitted. They also show that steam temperatures may be accurately deduced from the indicator diagram by converting pressures into corresponding temperatures. Cotterill devised a semi-empirical formula, based on barrel surface, as follows:—

$$\text{Total steam consumption} = \text{weight of dry steam} \times \left(1 + \frac{C \log_e r}{d\sqrt{N}}\right)$$

where d = cylinder diameter. Callendar's experiments appear to show the greatest loss to be due to clearance surface, while leakage may be responsible for from 5 to 50% of the total loss. The constant C is about 6 to 8 in simple unjacketed engines, and 4 in jacketed slide-valve engines, 2 to 4 in Corliss engines depending on the presence or absence of jackets, and 12 in very bad engines; but rarely rises above 8. Cotterill calls the bracketed terms 'liquefaction factor,' and another method of statement is

$$\frac{\text{Missing steam}}{\text{Indicated steam}} = \frac{C \log_e r}{d\sqrt{N}}$$

The missing quantity may vary from 25 to 60% of total steam supplied, and is about 30% on the average. Fig. 755 shows the loss graphically.

P. 614. **Methods of Reducing Condensation.**—There are four methods of decreasing the loss just mentioned: quick running, steam-jacketing, superheating, and compounding.

Quick running.—The advantage of high rotational speed (not

Digitized by Google

necessarily high piston speed) was demonstrated by Mr. Willans in 1888, when he got very economical results with a simple engine greatly by that means. The time of each stroke is then too short to allow of the temperature changes which cause condensation loss, and the expansion is approximately adiabatic. Lagging the cylinder increases its non-conducting capacity, and is an additional help.

Steam-jacketing is different to lagging in that heat is actually given to the steam, to assist re-evaporation. In every case there is some advantage in its use, though not always a large one. Its good effect is greatest with simple engines, slow speeds, large rate of expansion, and wherever considerable condensation would otherwise occur: it is of less value in compounds and in non-condensing engines, while at high rotational speeds it is useless.

Superheating the steam, that is raising its temperature above saturation point before entering the cylinder, is the most direct and effective means of reducing and even eliminating condensation loss. This is not achieved by increased boiler heating surface, nor by improved thermal efficiency due to higher temperature, both of which false explanations have been made; but simply by supplying the saturated steam with such heat as will partly or entirely prevent condensation, thus keeping the steam dry, or nearly so, throughout the stroke. The curious anomaly occurs that a 5% extra heat supply will often eliminate a 20% loss. Hirn demonstrated a saving of 22% in 1855, and in 1859 Penn and others saved as much as 30%; but as steam pressures increased, a reasonable 'superheat' could not be obtained without danger at the superheater, and the cylinder lubricants were also burned up, so the process was abandoned in 1870. A revival has taken place since 1890, the original objections having been removed by the substitution of petroleum for animal oils, and safer superheaters having small parts. The gain varies from 10% to 50% with 50° to 100° superheat respectively, and according to the perfection of the engine itself; but averages 25%. The effect on the indicator diagram is to raise the expansion curve, while lowering the saturation curve due to feed, and thus the dryness fraction approaches a maximum.

Fig. 843 shows the Schmidt superheater, consisting of a coil

Digitized by Google

of pipes through which the steam passes, and placed as near the boiler as possible. Leaving the boiler at A, the steam enters the two lower coils at B, then goes to the 'after-evaporator' C, and the uppermost coil D, from which it makes its way coil by coil to leave at E for the engine. In this way wet steam circulates where the heat is greatest, while the main and final superheat are more

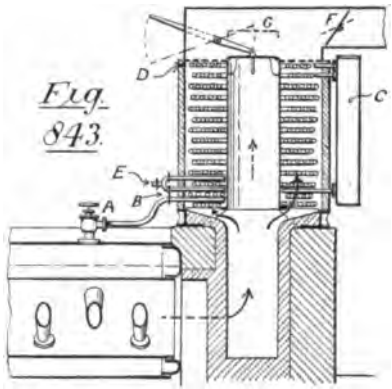

Fig. 843.

Schmidt Superheater.

effective by placing steam and gas currents in contrary directions. The damper G adjusts the superheat, which is a maximum when G is closed, and nothing when open. This important attachment thus meets changes in steam demand or stoking variation.

Compounding was explained at pp. 621 and 623. It has very satisfactorily decreased initial condensation by diminishing the range of temperature in each cylinder, but is undoubtedly expensive regarding first cost, a fact which presses less heavily on large powers than on small ones. The gain is due to placing re-evaporation at earlier positions in the *total* expansion.

Entropy and Temperature-entropy Diagrams.—Let the mechanical energy given to an overshot water wheel be $w\,(H'_1 - H'_2)$, where H'_0 is the zero of head and energy, and w the gravity weight of the water used. Applying the analogy to heat engines, we there have the heat energy given as $\phi\,(\tau_1 - \tau_2)$, where τ_0 is zero of temperature and of energy, and ϕ is what Zeuner calls

Digitized by Google

heat-weight, Rankine the *thermodynamic function*, and Clausius the *entropy*; the last term being now universally applied.

We may now draw a diagram of heat changes by plotting τ to a base of ϕ as in Fig. 844, from which we may deduce

$$\text{Heat supplied or rejected} = \phi \times \text{mean } \tau.$$

Just as the $p\,v$ curve shows work done, and is a cycle of mechanical operations, so the $\tau\phi$ curve shows heat change, and is a cycle of thermal operations. It was first practically developed by Mr. J. McFarlane Gray, and its great value is apparent when one remembers how much heat is unrepresented on the $p\,v$ diagram; though both diagrams have their uses. Isothermals, having constant temperature, are horizontal straight lines on the $\tau\phi$ diagram; and adiabatics are vertical straight lines, for no heat being supplied and yet τ changes, $\phi\,(\tau_1 - \tau_2) = 0$ and $\phi = 0$, or entropy is unaltered (see Fig. 844).

Applying to the Carnot cycle, Fig. 844, heat supplied is the area H_1, and that rejected the area H_2, for A B, C D are isothermals, and B C, D A adiabatics. Also the work done is $H_1 - H_2$

$$\therefore \text{Efficiency} = \frac{\text{work done}}{\text{heat exepnded}} = \frac{H_1 - H_2}{H_1} = \frac{\tau_1 - \tau_2}{\tau_1}$$

To draw the $\tau\,\phi$ diagram for water and steam, showing heat supplied per lb. weight, we commence with an arbitrary zero of entropy at 32° Fahr. = 492° absolute. Then

$$\text{Entropy of water at } 492° = 0$$

and at any other temperature τ

$$\phi_w = \log_e \tau - \log_e 492 = \log_e \tau - 6{\cdot}198 \,*$$

from which Table I. (next page) is calculated, and the results plotted as curve A B, Fig. 845, the area under which shows heat supplied up to any temperature.

* Hyperbolic log. = common log. × 2·3026.

Digitized by Google

I. ENTROPY OF WATER FROM 32° FAHR. PER LB. WEIGHT.

$t°$	τ	ϕ_w
32	492	·000
50	510	·036
100	560	·129
150	610	·215
200	660	·295
250	710	·367
300	760	·438
350	810	·504
400	860	·566

We have next to find the additional entropy due to the conversion of water into steam. Now at any temperature τ_1 the sensible heat from 32° is the area S_h, and the heat to be supplied in making this into steam being area L_h, the entropy added $= L_h \div \tau = \phi_s$. In this manner the second curve C D has been drawn and the figures in Tables II. and III. obtained:

II. ENTROPY OF STEAM PER LB. WT.

τ	$\phi_s = \frac{L}{\tau}$
492	2·219
510	2·116
560	1·865
610	1·655
660	1·476
710	1·322
760	1·188
810	1·070
860	·965

III. ENTROPY OF STEAM AND WATER PER LB. WT.

τ	$\phi_w + \phi_s$
492	2·219
510	2·188
560	1·994
610	1·870
660	1·771
710	1·691
760	1·626
810	1·574
860	1·531

The next problem is to convert an ordinary $p\,v$ indicator diagram into a $\tau\phi$ diagram, which we shall here solve by the

Digitized by Google

method of Prof. Boulvin, shown in Fig. 847. Draw four axes: temperature vertically upward to any scale, from 100° to 400°

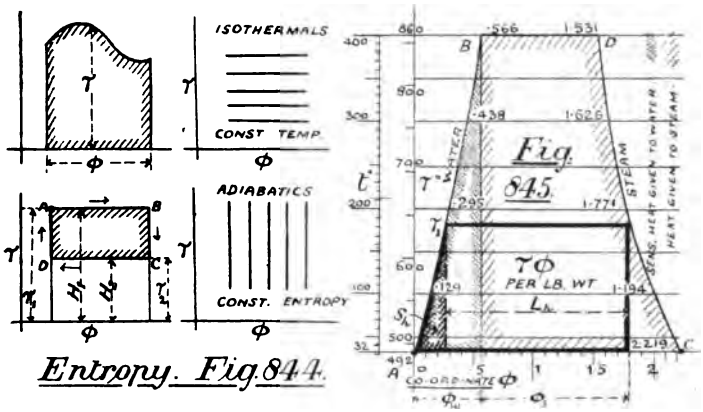

Entropy. Fig. 844.

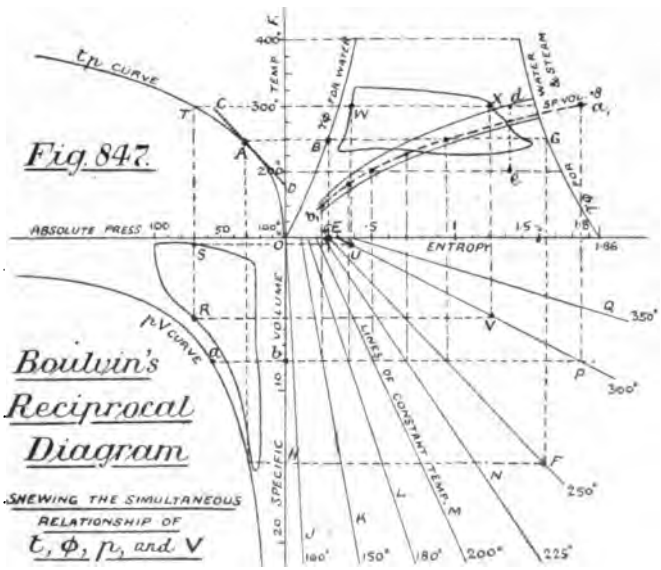

Digitized by Google

Fahr., absolute pressure leftward to any scale, entropy rightward to any scale calling ϕ at 100° = 0, and specific volume downward by a method to be described. Construct the $t\phi$ curve from p. 777, and $\tau\phi$ curves as already explained; then take any point A on the $t\phi$ curve and draw a tangent C D. Project A B G horizontally and B E vertically; and make E F ∥ C D. Next project G F downward

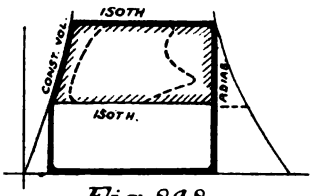

Fig. 848.

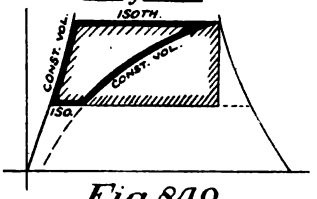

Fig. 849.

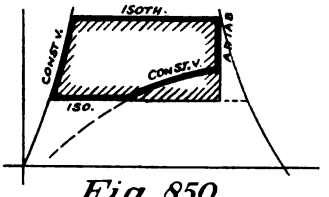

Fig. 850.

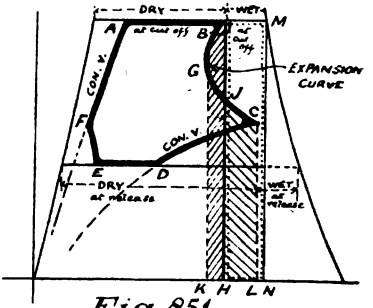

Fig. 851.

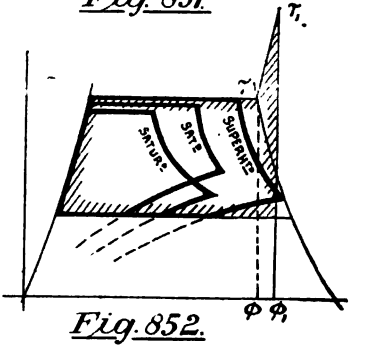

Fig. 852.

Temperature-Entropy Diagrams.

to cut E F, and draw F H horizontally. O H is now to be divided according to the specific volume at the given temperature, and thus a scale of volumes is obtained from which the saturation curve pV can be drawn. Following the construction described, the radial lines J, K, L, M, N, P, Q are next found, which are lines of constant temperature. Now take any indicator card, as at

Digitized by Google

p. 764, whose relation to the dry curve has been found, and plot it, point for point, so that it bears the same relation to pV. The transformation from $p\,v$ to $\tau\,\phi$ ordinates is next made: thus R and S are projected vertically to T, and horizontally to U and V respectively, on the proper constant-temperature line, and lastly U and V are projected vertically to W and X, giving points on the $\tau\phi$ diagram.

Note that a *constant volume* line $a\,b$ on the $p\,v$ diagram, when projected rightward and upward at various temperatures, becomes the curve $b_1\,a_1$ on the $\tau\,\phi$ diagram; and the adiabatic $d\,e$ on the $\tau\,\phi$ diagram can be similarly projected back to the $p\,v$ diagram. Constant pressure lines are always parallel to base lines.

Finally, before leaving this important heat diagram, a few further applications will be shown. Fig. 848 is the Rankine cycle, where heat supplied is shown by thick lines and the work done by shaded area; then, ideal efficiency is calculated by taking the base line at absolute zero. If the dotted figure be a card plotted out, its included area divided by the shaded area will be the *comparison-ratio*. Fig. 849 shows steam used non-expansively but without the usual losses. Dividing the black area by the shaded portion will give the comparison-ratio. Fig. 850 is the usual indicator card with incomplete expansion, but without cylinder condensation. Fig. 851 is a good indicator card with sharp corners, and the decrease of work done is easily seen; due to wetness from B to C, drop at release from C to D, compression at E F, and clearance at E A. As B H is an adiabatic, the area B G K H is additional liquefaction loss after cut-off, H J C L the gain by re-evaporation, and H B M N the loss before cut-off. Fig. 852 is for steam superheated before entering the cylinder, where ϕ is the entropy of the saturated steam, and ϕ_1 that of the superheated steam, the addition $\phi_1 - \phi$ being found from the formula

$$\cdot 48\ (\log_e r_1 - \log_e r)$$

There is nothing to be got by considering superheating by pure theory. The only way is to compare the indicated heat, shown by black lines, of an actual engine, with the shaded area, when the direction of saving is shown, being a decrease of the missing quantity when superheating.

Digitized by Google

P. 618. **The Indicator.**—Certain errors are possible in all indicators and their gears, which should be eliminated or allowed for. (1) The pressure springs should be tested by connecting the indicator to a mercury gauge, and admitting steam to both simultaneously, up to full load. A coefficient is thus deduced to correct indicator readings. (2) The drum spring being light, is sufficiently corrected by the use of wires instead of strings. (3) The decreasing gear should be mechanically accurate and rigid. (4) The connecting pipes P R Q, Fig. 621, are best dispensed with for very accurate purposes, and two indicators used, one at P and the other at Q.

P. 627. **Willans' Law** was discovered by the late P. W.

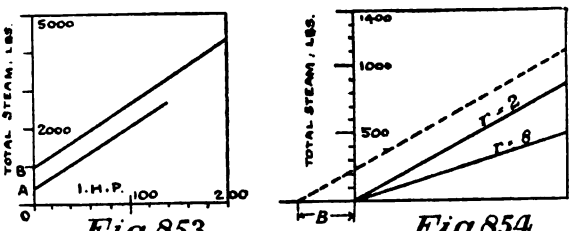

Fig. 853. *Fig. 854.*

The Willans Line.

Willans when testing his engines. It occurred to him to plot total steam consumption per hour to a base of H.P. (brake, indicated, or electrical) and as the latter was varied by throttling the steam at *constant expansion*, he found the plottings to follow an inclined straight line passing above the origin, showing total steam consumption to be proportional to H.P. plus a constant. In Fig. 853 is a pair of these lines for Willans engines, where the heights O A and O B represent steam consumption for no work, viz., condensation and leakage. Gas-engine lines pass nearly through O, but oil engines have similar losses to steam engines. Another method of plotting is to use piston mean-pressure as base, Fig. 854, and two lines are shown for different expansion ratios in a good condensing engine, the steam consumption being reckoned theoretically as on p. 627, but neglecting factors D_f and L_q; there is, therefore, no loss at the origin. Similarly the dotted line is the

Digitized by Google

theoretical statement of a non-condensing engine, where B is back pressure of atmosphere.

P. 633. **High-speed Engines.**—These cannot be dismissed without mentioning two important examples.

The Willans Central-valve Engine has shown exceptional economy. Fig. 855 is a section through a compound type, where

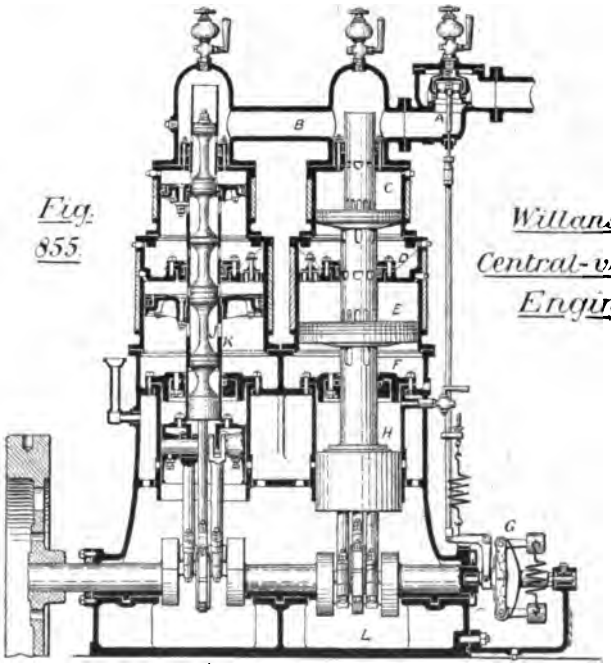

Fig. 855. *Willans' Central-valve Engine.*

A is the throttle valve controlled by a governor G, B the steam chest, C the high-pressure and E the low-pressure cylinders, D the intermediate receiver, F the exhaust chamber, H the air cylinders, and J the slide valve with piston trunk K. The eccentric being on the crank pin, J and K move relatively by the amount of eccentric travel, and the cranks are 180° apart. Steam passes from B to C by the trunk, then similarly to D, E, and F; but work is only done on the down stroke, the pistons being in equilibrium

Digitized by Google

on the up stroke as in the Cornish cycle, p. 628, thus dividing the temperature drop in each cylinder on a semi-compound principle. Some air being caught in H on the up stroke, serves as a cushion compelling none but compression stresses on the crank, thus avoiding the reversal knock and unnecessary alteration of steam distribution. The piston and gland rings are all steam packed. The advantages of such single-acting high-speed engines are (1) balance due to opposite cranks, (2) economy of the Cornish cycle or 'transfer system,' (3) constant direction of stress, (4) less cylinder condensation, and jackets unnecessary, (5) more regular

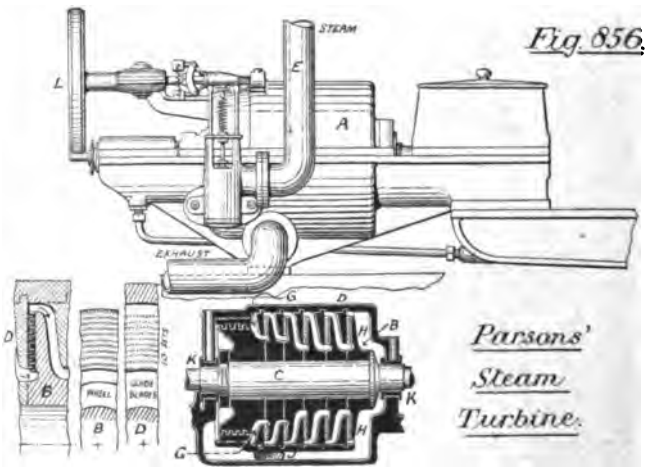

Fig. 856.

turning effort due to high speed, (6) direct adaptation to dynamo driving, (7) lighter engine for given power.

The Parsons Steam Turbine is best introduced by a reading of the matter on water turbines in Chap. XI. The first steam turbine had parallel flow, and was virtually an impulse machine where the wheel travelled at 40 % of the steam velocity; the latter being 380 ft. per second, and the former making 9000 revs. per m. Per H.P. hour 42 lbs of steam was used, entering at 84 and leaving at 15 lbs. absolute pressure. The present motor has often outward or inward flow, and by compounding or causing the steam to pass successively through five or seven wheels, the

Digitized by Google

steam *pressure* is used rather than mere impulse, resulting in a consumption of 16 lbs. per I. H. P. hour, while running at 4800 revs. per m.; and the absolute pressures are 115 lbs. and 1 lb. when entering and leaving respectively. In Fig. 856 the casing A contains five wheels B B fastened to shaft C, and five fixed discs D D carrying the guide blades. As the steam, which is superheated, passes between B and D in each case, it is deflected by the guide blades against the wheel blades, causing rotation. Entering by pipe E, through throttle valve F, into space G, it passes between every set of blades till it emerges at H, exhausting at J. The pressure at G being high, there is a special thrust-bearing to prevent leakage, and at K K are stuffing boxes. The governor shaft L is driven by friction gearing, and a conical cam upon it depresses the throttle valve at regular intervals, thus admitting steam intermittently. The governor therefore regulates amount of opening by sliding the cam longitudinally on shaft L.

P. 664. **Zeuner Diagram for Meyer Valve.** — This construction has already been shown, where opening of main

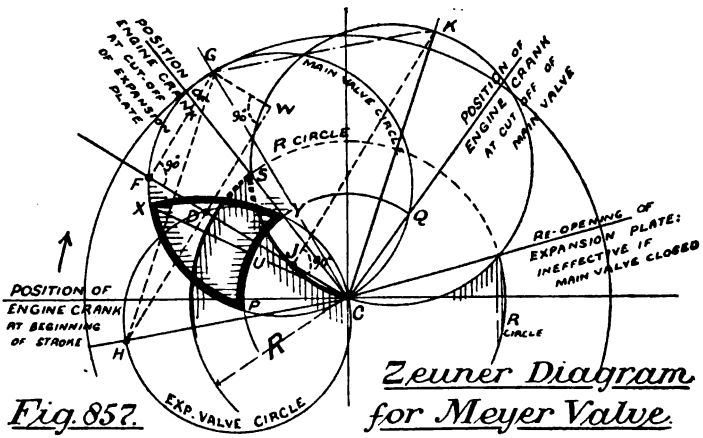

valve is given by the usual circle, and the closing of expansion plate by a circle of relative motion. The construction may be proved from Fig. 857, where H C is the expansion-valve circle, G C

Digitized by Google

the main-valve circle, and C K that showing relative motion of the two valves. Join H D, and produce to W, making G W ∥ F D, and join K J. We must prove J C = F D, the difference- or relative-motion. Now F, D, J, and W are right angles (*Euc.* III. 31), and G H = K C; therefore J C = G W = F D. Hence the radii-vector of the vertical shading shows diminishing opening of expansion plate, which becomes zero when C S = the R circle radius or circle of negative steam lap of expansion plates. Also the horizontal shading, radially intercepted, gives opening of main valve. Combine the two areas by drawing radial lines through C, taking the shorter intercept of the two, and placing radially on base P Y, and thus obtain the curve P X Y, showing that opening from P to X is governed by main valve, and closing from X to Y by expansion plate: the two spaces being equal at X U.

P. 686. **Condensers.** — Wherever the supply of cooling water is limited, the *Evaporative Condenser*, Fig. 858, may be adopted. The exhaust steam A passes through a large number of pipes F, cooled externally, and the condensed steam is returned to hot well by pump B. The upper trough C is kept filled with water, which trickles over the pipes into the lower trough D, and is then returned by circulating pump G to C, the evaporation loss being made good from the main at E. Whereas in the usual condensers the steam heat is simply used to raise the temperature of water, requiring about 20 lbs. water per lb. of steam (see p. 598), this condenser *evaporates* a large portion of the cooling water, thus causing each lb. of evaporated water to abstract the heat in 1 lb. of steam or thereabouts; hence the weight of cooling water may be merely *equal* to that of the condensed steam. In practice it is often less, for radiation and conduction do some of the work. The evaporation is increased some 50% if fan draught is used; and 10 sq. ft. of pipe surface per I. H. P. is adopted, as against 1 or 2 with surface condensers. The joints must be specially good, but a 24 in. or 26 in. vacuum may be obtained, and still better results if the steam and water currents be opposed in direction. External incrustation must be removed at times.

Various cooling systems are also adopted to economise condensation water. In Fig. 859, A is an 'independent' Worthington jet condenser, where B is the steam cylinder and C the air

Digitized by Google

pump. The injection water being drawn through D, and the exhaust entering at E, the condensed steam and water is delivered through F, and distributed by the revolving pipe G. Trickling down the drain pipes at H it finally arrives at the tank J, having been cooled by the draught of fan K.

Evaporative Condenser

Fig 858.

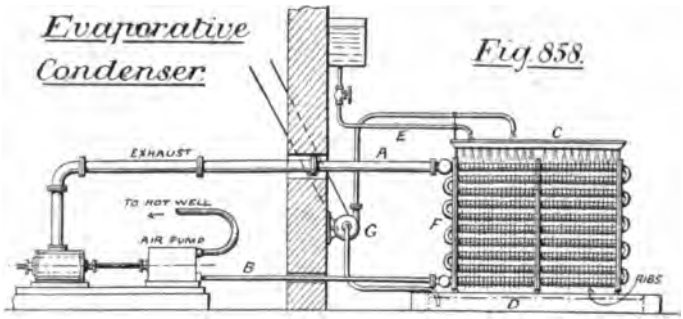

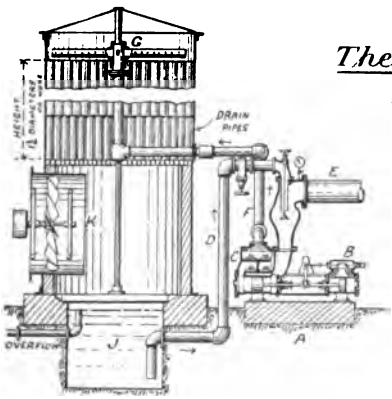

The Worthington Independent Jet Condenser

WITH COOLING TOWER

Fig 859

Balancing.—When an engine is perfectly balanced there will be no shock to the foundations, nor indeed are they in that case necessary; but without such balance, a heavy foundation must be provided to absorb the momenta of moving parts. Balancing may be obtained in more than one way, but the principle is always the opposition of the motion of some heavy mass to that of the engine parts, in such wise as to make the opposed momenta changes, or accelerations, nearly equal at all

Digitized by Google

times. The first difficulty is that some parts rotate while others reciprocate. Now the rotating weights are easily balanced by others having equal moment, but the reciprocating weights should be opposed by other reciprocating weights, as Mr. Yarrow did in small marine engines, by means of 'bob-weights' driven by eccentrics, A, Fig. 860. Large engines could scarcely be so treated, so they are still left greatly unbalanced. One of the best methods, B, Fig. 860, is that of the double-cylinder single-acting engine with opposite cranks, which leaves only one unbalanced moment, whose arm is the distance between cylinder centres; but

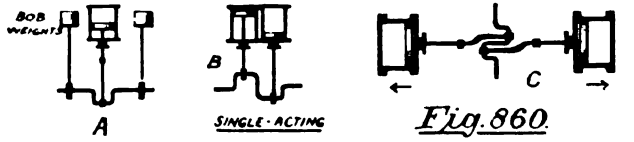

Fig. 860.

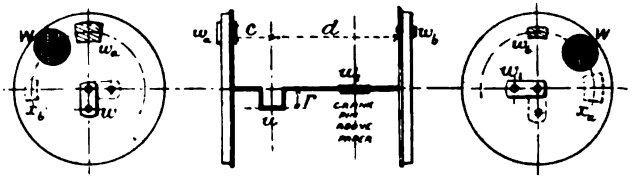

Balancing. *Fig. 861.*

even this can be eliminated by placing the cylinders as at C, Fig. 860.

Locomotives, unless fairly well balanced, experience dangerous oscillations, so the whole of the rotating weights, and $\frac{1}{3}$ or $\frac{1}{2}$ of the reciprocating weights, are considered as collected at the crank pins, where they are opposed by weights on the driving wheels. Supposing this done, as in Fig. 861, take w alone and balance it by w_a and w_b so that

$$w_a r_a + w_b r_b = w r \qquad \text{also } w_a c = w_b d$$

Next treat for w_1 similarly, finding x_a and x_b. Lastly combine w_a and x_b into one weight W at their common centre of gravity, and do the same for w_b and x_b. It is customary to bolt weights W W temporarily, and drive the engine while slung in chains, so as to observe unbalanced oscillations and make corrections, when it

Digitized by Google

will be found that a complete balance of reciprocating parts at *crank pin* will induce a large unbalanced vertical shock or 'hammer blow.'

P 693. **Care of Boilers.**—The possible defects in steam boilers may be thus classified :

Construction.	External.	Internal.
Design	The Setting	Corrosion
Materials	Wasting	Grooving
Workmanship	Bad Fittings	Incrustation

and the result of such defects is emphasised in the following table :

BOARD OF TRADE RETURNS FOR 14½ YEARS, ENDING DEC. 1896, and showing numbers of explosions and collapses, with their causes :

Causes.	Explosions.	Collapses.
Internal corrosion	11	22
External corrosion	55	25
Corrosion on both sides ...	1	3
Corrosion, side not stated ...	9	28
Grooving	26	3
Excessive pressure	18	18
Failure of stays...	10	3
Deficiency of water	12	46
Structural weakness	11	21
Fractures	6	0
General deterioration	5	0
Seam rips	5	0
Deposit	4	8
Not ascertained	1	4

Digitized by Google

Constructive defects occur less often nowadays, the necessity for both strength and elasticity being fully recognised, good mild steel employed with larger plates and fewer seams, drilled holes, and hydraulically-closed rivets, and bad caulking eliminated. Many small details still need insistence, however, such as the strengthening of manholes by riveted rings, and the use of riveted bosses for all coverings so as to avoid unseen leakage. The setting should be on a dry and strong site, and should have large flues to facilitate examination.

External wasting causes many explosions, being usually concealed by brickwork or other covering, thus retaining moisture if in a damp situation, and teaching the importance of narrow surface where brickwork meets the boiler. Smooth wasting is due to intermittent use, and is caused by moist soot, its action being so slow and uniform as to be undetected without a drilling of the plate. Wasting also occurs at the lower part of boilers, on account of moist ashes. The fittings cannot be too carefully watched and tested: there should be two water-gauges, and the safety valves be direct-loaded if possible, while the fusible-plug metal should be renewed annually.

Corrosion or pitting is caused by the chemical action of gases in the water, or to electric action, the plate becoming electro-positive to the impurities, and the water, if acid or salty, forming an electrolyte between the two. Slightly muddy water may thus be a distinct advantage, and a little lime deposit prevent chemical action. If the boiler needs to stand a long time it should be emptied and dried, while electric action is sometimes prevented by suspending zinc blocks, connected by soldered wires to the plate, which they protect by taking its place and wasting instead.

Grooving is a surface cracking due to abrupt bending under alternate heating and cooling, and is generally found near rigid stays. When first appearing it is called 'mechanical' grooving, but, as it widens and deepens by corrosion, it is termed 'corrosional' grooving, and the obvious remedy is sufficient elasticity with strength, while rounding stay edges at the plate.

Incrustation or scale is the hard deposit in boilers resulting from boiling water at high temperatures. It depends on feed-water composition of which the following are typical analyses:—

Digitized by Google

	Spring Water.	River Water.	Sea Water.
1. Calcium Carbonate ...	13·53	8·96	2·76
2. Magnesium Carbonate ...	1·11	1·04	Trace
3. Calcium Sulphate... ...	4·46	2·49	77·36
4. Magnesium Sulphate ...	0·77	0·00	120·03
5. Sodium Chloride	2·19	1·49	1536·11
6. Magnesium Chloride ...	0·56	3·49	183·06
7. Silica, Alumina, &c. ...	0·19	0·22	Trace
Grains per gallon ...	22·81	17·69	1919·32

The first and second exist in solution with the gases in the water, as bicarbonates, and are precipitated as monocarbonates. *Calcium bicarbonate* is less soluble in hot water, and is therefore reduced by boiling; but the best method is the Clark process, where slaked lime is added to the feed settling tank, causing a precipitate of calcium carbonate *before* entering the boiler. Only the exact amount should be added and the feed then be filtered through stretched cloths. Another method is to add soda (caustic or carbonate) in the boiler. The former is preferable, as more energetic, but attacks brass fittings, and leaks through otherwise tight joints. The resulting loose precipitate is calcium monocarbonate, and some soda carbonate in solution, easily blown off. *Magnesium bicarbonate* is best treated by the 'Clarking' process, which causes precipitates of magnesium and calcium monocarbonates. *Calcium sulphate* is very troublesome, giving water what is known as permanent hardness. The lime process is useless, and soda must be applied, precipitating calcium carbonate, and putting a sodium sulphate in solution, which must be blown off. *Magnesium sulphate* occurs infrequently in fresh water, and is only troublesome with lime salts; it may also be treated with soda, preferably in the caustic form. *Sodium chloride* (common salt) needs no mention, for fresh water is now always used in marine boilers, loss being made up by water from 'evaporators.' *Magnesium chloride* is objectionable by giving off

Digitized by Google

free hydrochloric acid, thus causing corrosion; but it may be neutralised with lime. If the preceding precautions be not adopted, viz., applying the right chemicals as indicated by feed-water analysis, a good deal of chipping must be done to remove scale and prevent overheating.

P. 693. **Boiler Covering.**—To reduce radiation from boilers or pipes, pasty coverings are usually applied, which are more or less effective. The following results were obtained by Mr. Laird, of St. Louis, who made analyses and heat tests of the materials indicated:—

WEIGHT COMPOSITION PER CENT.

Name of Article.	Plaster of Paris.	Magnesia.	Asbestos.	Carbonaceous Matter.	Insoluble Silicates.	Soluble Mineral Matter.	Powdered Limestone.	Comparative Condensation Loss.
Plastic magnesia ...	...	93	7	...	...	...	...	334
Sectional magnesia	...	92·2	7·8	...	...	...	...	335·3
Asbestos fire-felt ...	...	82	...	18	...	...	...	367·5
Asbestos sponge, moulded	95·8	...	4·2	...	...	...	...	371·3
Fossil meal	...	...	...	12	80	8	...	376·2
Plaster of Paris and sawdust	?	...	...	?	...	...	...	438
Asbestos fire-felt cement	3·5	...	32	...	...	...	64·5	563·7
Asbestos sponge cement	10	...	31	...	...	...	59	604
Bare pipe	...	..	...	...	...	...	...	1085

P. 693. **Boiler Fittings.**—*Safety valve* area may vary considerably: thus, the Board of Trade (p. 694) require only two-thirds of the area used in America. The former, based on experiments up to 60 lbs. pressure, should be smaller at high pressures, but larger again for forced draught. The lift is always small, varying from ·2″ at 10 lbs. to ·02″ at 30 lbs. blow off, but is proportionately larger with a small than a large valve.

Steam Traps are for automatically removing condensed water in steam pipes, in one of two ways: either the rise of water lifts

Digitized by Google

a float which opens a valve periodically, or the deposition of cooler water contracts a plate or rod which opens the discharge valve. Fig. 862 is a trap of the former type. The float D,

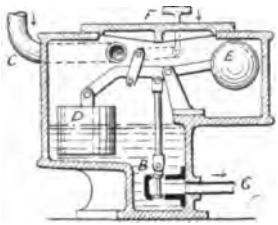

Steam Trap

Fig. 862.

balanced at E, is gradually lifted, and when it reaches a certain height, the valve B opens, and pours the condensation water through G. F is a trial handle.

The *Steam Loop* is an interesting contrivance by which the water from a separator is returned to the boiler. The usual supply pipe A, Fig. 863, connects boiler B with cylinder C, and the steam

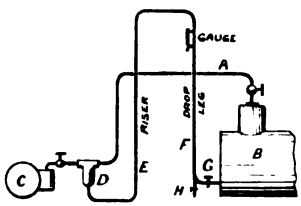

The Steam Loop.

Fig. 863.

is dried by separator D. From the separator drain, the water is returned by riser E and drop-leg F, through the check valve G. Now let the drain cock H be opened, so as to blow out the pipes E and F: when closing again, water will accumulate in the drop-leg until there is sufficient weight to open the check valve G, while the steam behind it balances the boiler pressure. In this manner there will be an intermittent flow of water back to the boiler, for the priming water will be carried up E as spray, and when a sufficient weight has condensed in F, the check valve will re-open.

Digitized by Google

To avoid the evils of varying boiler pressure, a ***reducing valve*** is now often used between boiler and cylinder, giving a lower pressure, but steadiness and dryness. Reid's valve, Fig. 864, is a

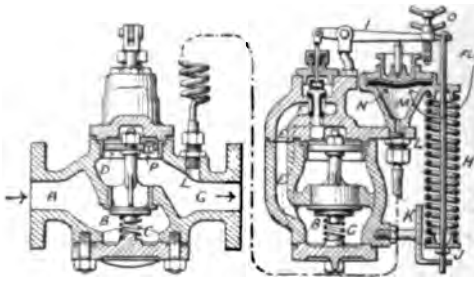

Reids Reducing Valve.

Fig. 864.

good example. The steam entering at A, finds valve B closed by spring C, so passes along E, and lifting the throttle valve F, acts on the piston D and overcomes the compression of spring C, thus allowing a free flow through D to G at a lower pressure. Now the coiled pipe L is connected to vessel M, which is always full of condensation water, and the low pressure acting on diaphragm N tends to lift lever I and close valve F, thus throttling the pressure on D to the right amount. The lifting tendency is also resisted by the spring N, which can be screwed up against a dial K to give and show the required reduction.

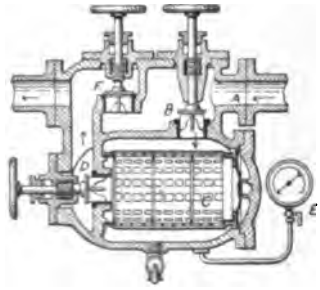

Rankine's Marine Filter.

Fig. 865.

When the hot-well water is returned to boiler, there is danger due to the deposition of cylinder oils on the furnace crowns, causing possible overheating. , ***Feed-water Filters*** have been therefore introduced, of which Rankine's, Fig. 865, is an example.

Digitized by Google

The water is pumped through at A and passes by inlet-valve B, through the filtering cartridge C, then by the outlet-valve D to the boilers. At first the gauge E registers boiler pressure, but as the filtering cloth on grid C becomes charged with grease, the pressure rises, and, when some 20 lbs. higher than boiler pressure, valves B and D are closed and bye-pass F opened, permitting the removal of the grid to apply a new cloth.

Feed-water Heaters are contrivances for saving waste heat, by giving it to the feed water on its way to the boiler. There are three ways of doing this: (1) by intercepting some of the heat of the furnace gases when leaving the boiler, (2) by letting the feed pass through a vessel jacketed with exhaust steam, and (3) by a similar use of live steam. The first apparatus, called an

Green's Economiser

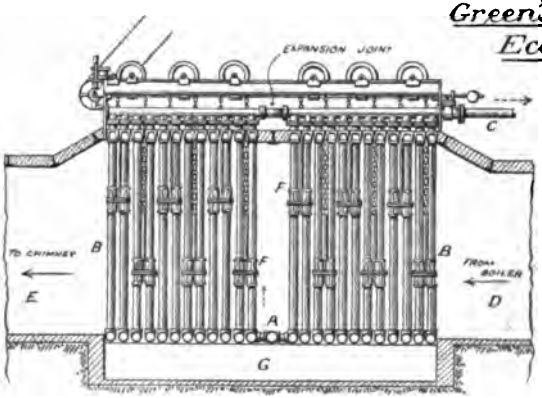

Fig. 866.

'*economiser*,' is shown in Fig. 866, standing in the flue between boiler and chimney. The feed-water enters at A, rises simultaneously in pipes B B, and leaves at C on its way to the boiler feed-valve, while the hot gases pass in the contrary direction, D to E. There being a large accumulation of soot, the scrapers F F, Mr. Green's invention, are used from time to time, and the débris is dropped into chamber G. Fig. 867 is an *Exhaust-steam Feed-heater*, the water entering at A and passing through the tubes, then leaving at B for the boiler; while simultaneously the exhaust steam travels by C to D, surrounding the tubes. Live-steam feed-heaters have no advantage in theory, but in practice they save

Digitized by Google

the boiler by avoiding unequal expansion due to cold feed, and also promote circulation. Injectors belong to this class.

The *Superheater*, as a boiler apparatus, has already been explained.

P. 696. **Fuel.**—The calorific value per lb. of a given fuel can be obtained as on p. 697, or may be expressed as a simple formula, where the weights of other elements are given in terms of the carbon. Thus (p. 697, lines 7 and 8) 1 lb. of H produces 4·28 times the heat 1 lb. of C does; and again (p. 697, line 20) 1 lb. of H must be deducted for every $\frac{1}{8}$ lb. of O present.

$$\therefore \quad \left.\begin{matrix}\text{Calorific value in} \\ \text{B.T.U. per lb.}\end{matrix}\right\} = 14500 \left\{C + 4{\cdot}28 \left(H - \tfrac{1}{8} O\right)\right\}$$

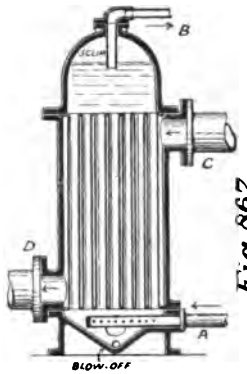

Fig. 867. Exhaust-steam Heater.

Fuel Calorimeter

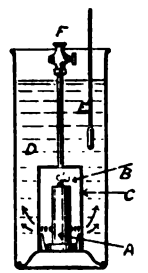

Fig. 868.

where C, H, and O are the respective weights of these elements per lb. of fuel. Now as 966 B.T.U. evaporate 1 lb. of water from and at 212°,

$$\text{lbs. of water evaporated per lb. fuel} = \frac{\text{calorific value}}{966}$$

given in what are called evaporation units. For the sample on p. 697 this would be 15·3 lbs. of water.

A directly practical test is, however, always advisable, and for this we may refer to Thompson's fuel calorimeter, Fig. 868. A fuel chamber A is placed on a stand, immersed in a vessel of

Digitized by Google

water B, and covered by a combustion chamber C having holes for escape of gas. E is a thermometer, and F a cock for the first rush of gas when testing, but otherwise shut. The method of use is to weigh a small quantity of dry powdered fuel, and with it the necessary amounts of potassic chlorate and potassium nitrate to produce complete combustion. These are next placed in vessel A, the fuse lighted, covered with vessel C, and the whole immersed in a known weight of water B. The fuel gradually burning, heat is given to the water, whose temperature is raised, and it is then a simple matter to find the B.T.U. per lb. of fuel.

Liquid Fuel, commonly the residue 'astatki' due to the distillation of lighter oils from petroleum, is more used than formerly. The method now adopted is to induce and inject the oil as spray, by means of a steam jet, and the system has many advantages, such as very complete combustion, absence of stoking, one-third less chimney-heat loss compared with coal and twice the evaporative value, as well as a further increased evaporation for the same grate area through decreased dilution of the gases. A good 'sprayer' should give fine spray, little noise, and be quickly separable for cleaning, which requirements are well met (according to Mr. R. Wallis in his N.E. Coast Inst. paper, from which these notes are taken) by the Rusden and Eeles apparatus, Fig. 869. Both oil and steam jets are annular and regulated by hand wheels, and the complete installation, Fig. 870, consists of a pump A to raise the oil to a service tank B, thence to the sprayers, a steam pipe C for the oil feed-pump A, and another D for the sprayers, the steam being superheated on its way to secure higher efficiency and economy. The furnaces are partially lined with firebrick to distribute the heat, and to retain it for some time after the jet is extinguished. Before lighting, the furnace should be blown out by steam, and the torch applied *before* turning on the spray, otherwise an explosion is possible.

P. 698. **Artificial Draught.**—*Forced Draught* has already been explained in principle. It is practised in three different ways. The closed stokehold, with air from fans under a water head of $\frac{3}{4}''$, and air-locks for the passage of stokers, is still in operation with economical results, and without apparent injury to

Digitized by Google

Rusden & Eeles' Liquid-fuel Sprayer.

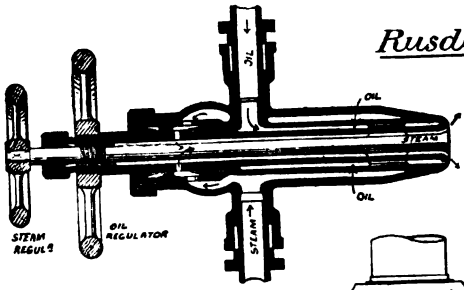

Fig. 869.

Liquid-fuel Firing Installation

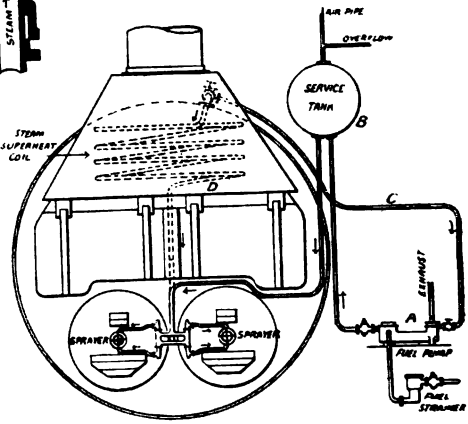

Fig. 870.

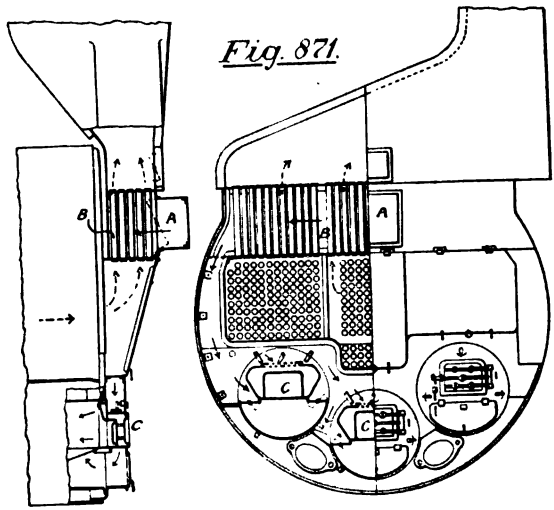

Fig. 871.

Forced Draught.

(HOWDEN'S SYSTEM)

Digitized by Google

the boiler; but it is dirty, and the stokehold temperature is as high as 116° F. The closed ashpit is shown by the Howden system, Fig. 871, where the air is forced in at A by a fan, and passing over tubes B B that are heated by hot gases from the boiler, enters the fire through the fire-door C, both above and below the firebars. The results are more economical than in the last system, but the temperature of the stokehold is still high. In the third method, shown by the Meldrum furnace, Fig. 871*a*, air is introduced at the blowers B, by means of a jet of steam from the pipe A, and the ashpit is closed, but the ordinary firing arrangements are not interfered with. The system is especially suitable for dust fuels.

Fig. 871a.

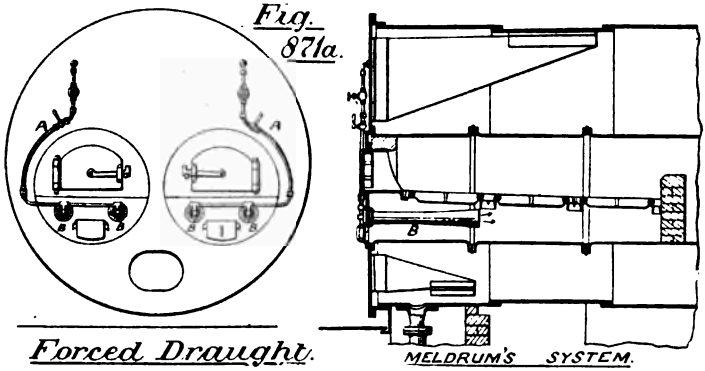

Induced draught has many advocates. It is effected by a fan in the uptake, which removes air from the boiler tubes and causes a partial vacuum into which the combustion air enters by passing over the fire. Its best representative is the Ellis and Eaves system, Fig. 872. The air enters by tubes A, where it is heated by furnace gases, and then through the ashpit door as before. Upon reaching the uptake it is deflected through the suction fan B, or may ascend directly to the chimney if damper C be opened and D closed. Its efficiency is greatly increased by the Serve tubes shown, and retarding plates, and the stokehold is both clean and cool. There is said to be decreased injury to boiler tubes through the air entering at their centres instead of impinging on their edges, and an evaporation of 60 lbs. per sq. ft. of grate is easily obtained.

Digitized by Google

Locomotive draught is induced up to 10″ of water-head, and forced up to 2″ by the current entering the front of ashpan.

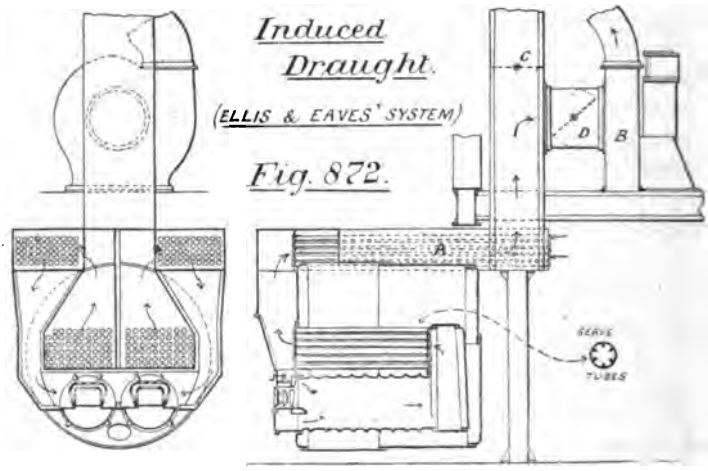

P. 698. **Mechanical Stoking.**—It is well known that hand firing is responsible for a large quantity of imperfectly-burned fuel, as well as the emission of much smoke, and some form of machine stoking is therefore desirable, whose expected advantages would be (1) smoke-prevention by uniform firing and constantly closed doors, (2) economy of fuel by using cheap coal and obtaining more perfect combustion, (3) economy of labour, (4) higher, more uniform, and more easily regulated evaporation. There are two forms of these machines: *coking stokers*, where the coal is first fed to a dead-plate or its equivalent, for preliminary distillation; and *sprinklers*, where the fine coal enters at the centre of the bars and is distributed by fans or beaters. We have only space for an example of the first, Fig. 873, as made by the New Conveyor Company. The hoppers A A contain small coal, placed there by mechanical elevators. This coal is fed slowly forward by the screw B, then coked at C, and pushed forward gradually by the movement of the firebars, which are connected to the crank shaft D. Finally the fuel arrives at E completely burnt, and simply drops down as ash.

Digitized by Google

P. 699. **The Gas Engine.**—Beau de Rochas showed the necessity for large cylinder volume and small circumference, high piston speed, large expansion, and high initial pressure, proposing

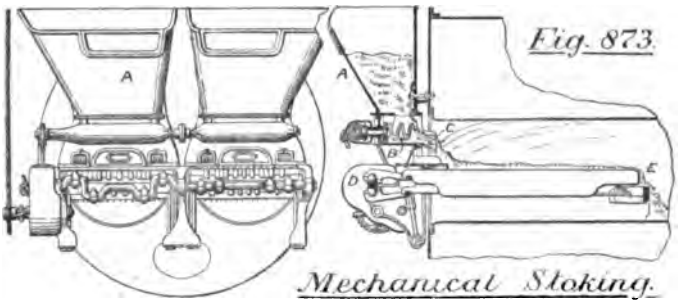

Fig. 873.

also his four-stroke cycle, where he used compression to give opportunity for sustained expansion. The defects of this cycle are irregular crank effort, dilution of charge with burnt gases, and expansion-ratio no larger than compression-ratio

Other Cycles.—In Clerk's engine of 1880, Fig. 874, the charge

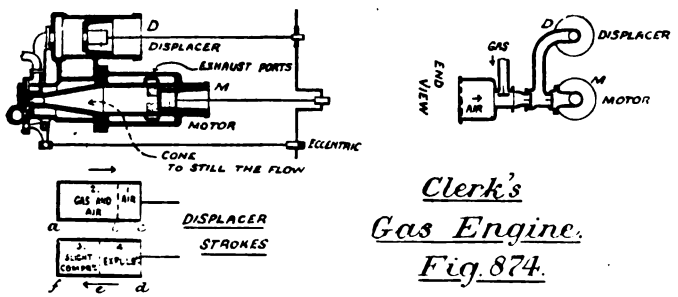

Clerk's Gas Engine. Fig. 874.

is first prepared in the displacer cylinder whose strokes are:

admission of charge, first gas and air, afterwards air.

slight compression, and expulsion to motor.

The motor crank follows that of displacer by 90°, and the motor-cylinder operations are:

Digitized by Google

End of outward stroke: Exhaust and sudden admission of charge, causing scavenging.

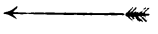

: Compression of charge.

: Ignition, expansion, and exhaust, as before.

A slight loss of charge occurs when scavenging, but higher ignition pressure is obtained, and one impulse per revolution. The Beck Engine, 1888, used a six-stroke cycle, two strokes of which were for scavenging by the admission and expulsion respectively of pure air; but crank-effort was very uneven. In the Griffin Engine the same arrangement is adopted, but the

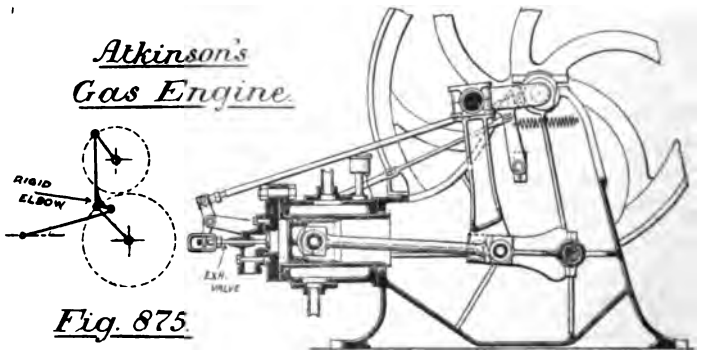

Fig. 875.

piston being double-acting there is an impulse every three strokes. Undue heating, the chief objection, is removable by the adoption of two single-acting cylinders. Two ingenious engines made by Atkinson used a link-work driving-gear to so vary the piston speed as to give long expansion and short compression strokes. Thus in a 2 H.P. (nominal) 'Cycle' engine, the second form, the following proportions obtained:—

Length of admission stroke	...	6·3″	11·33″	about 1 : 2
Length of compression stroke	...	5·03″		
Length of expansion stroke	...	11·13″	23·56″	
Length of exhaust stroke ...	...	12·43″		

and while the compression-ratio was 2·5, that of expansion was

Digitized by Google

4·3. Fig. 875 shows the engine, whose only objection was complication and weight of parts.

Self-starter.—There are three methods of starting a gas engine: (1) by turning round during four strokes, igniting, and keeping moving for a short time, (2) by the use of a small turning engine for large examples, (3) by attaching a 'self-starter' to carry the piston through four strokes. In Lanchester's apparatus, Fig. 876, the exhaust-valve A is held up during expansion and compression by a special cam, which slips out of gear after starting; while B is a cock for admitting gas, and C is open for the escape of gas and air, the mixture being lit by the flame E. Having placed the crank past dead-centre, the flame C is watched: at first it is blue, then brighter, and just as it begins

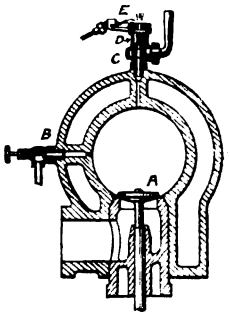

Lanchester's Self-Starter
FOR GAS ENGINES.

Fig. 876.

to roar, B is closed, which causes the flame to strike back into the cylinder and explode the charge, non-return valve D lifting automatically to prevent escape. This impulse should carry the piston through four strokes, and very little aid continue the motion.

For engines of 8 or 10 H.P. gas is most conveniently obtained from company's mains, but for larger engines a special plant for cheap gas is advisable. There are two methods of procuring gas from solid fuel: (1) by *distillation* in retorts and subsequent purification, (2) by combustion. The latter may be practised in two ways. *Producer gas* is obtained by burning coke to form CO, the air supply being restricted. *Water gas* is made by burning coke to incandescence and then directing a jet of steam

Digitized by Google

upon it: the latter being decomposed into H and O recombines with the coke and forms a rich gas; but as continuous production is impossible, there is a 'blow' for ten minutes, and then a re-admission of air to revive combustion. ***Power gas***, known as Dowson gas in England and Lencauchez gas in France, is made from coke or anthracite (so as to avoid tar), and can be worked continuously, the steam and air being admitted together in proper proportions. Fig. 877 shows a Buire-Lencauchez gas plant,

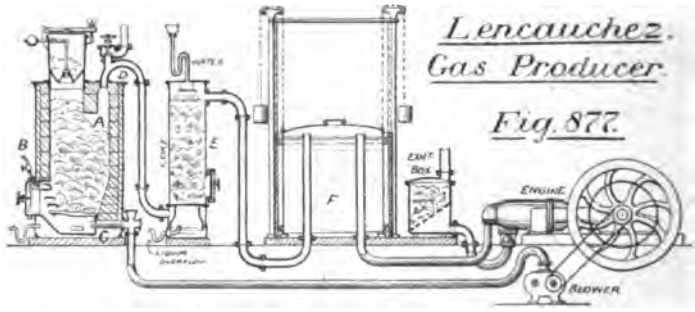

where A is the coke furnace, supplied with fuel at the top, with steam at B, and with air at C. The gas escapes at D, and passes through the 'scrubber' E, which is filled with coke to spread the trickling water and so absorb ammonia; thence to holder F, from which it is drawn by the engine. One volume of gas to $2\frac{1}{2}$ of air is required, so an engine designed for lighting-gas must have its valves altered; a scavenging charge is also necessary. The following consumptions were obtained with lighting gas:—

CUBIC FEET OF GAS USED PER HOUR.

	Lenoir.	Hugon.	Otto-Langen.	Otto-Crossley.	Atkinson.	Berk	Griffin.
Per I.H.P. hr.	88 to 105	77 to 92	26	17 to 25	19·22	21·5	
Per B.H.P. hr.	...	...	...	19·7 to 29	22·5	26·8	23 to 28

Digitized by Google

and the next figures compare working cost of various power-producers.

COMPARATIVE COST OF ONE I.H.P. HR.

Steam	... ...	$\frac{1}{4}d.$	Petroleum	... ...	$\frac{1}{2}d.$
Gas	(Lighting) .	$\frac{1}{2}d.$ to $\frac{3}{4}d.$	Electricity		
	(Poor) ...	$\frac{1}{4}d.$ or less.	(from main)	...	$1\frac{1}{2}d.$ to $4\frac{1}{2}d.$

P. 709. **Oil Engines.**—For motor-cars the Priestman

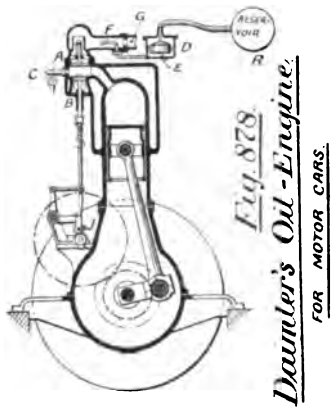

Fig. 878. *Daimler's Oil-Engine* FOR MOTOR CARS

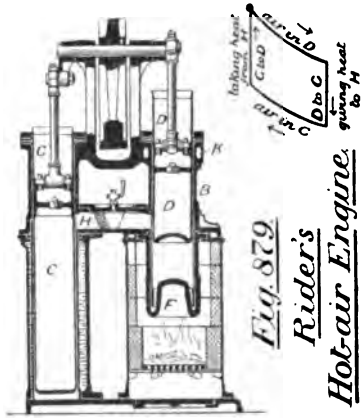

Fig. 879. *Rider's Hot-air Engine*

engine is too heavy, but the Daimler motor, Fig. 878, has proved eminently successful. There are two cylinders, side by side, having cranks at 180°, and using the Otto cycle, so there is an explosion per revolution. The charge of oil-vapour and air enters at A, the exhaust leaving at B; and the ignition tube C, of platinum, is kept hot with a lamp. The oil, benzoline, flows from reservoir R through the chamber D, at a slow and regular rate, controlled by float E, and as it emerges at F is wafted into spray by the suction air at G. The exhaust-valve B is lifted every second revolution by a cam J, worked from crank shaft by gearing. It is usual in motor-cars to drive from crank shaft to a countershaft, and thence to wheels by chain gear: this permits of a change of speed by cone pulleys.

Hot-air Engines.—These are sufficiently illustrated by the

Digitized by Google

Rider Engine, Fig. 879, which has been much used for small powers. C is a displacer, and D the power plunger, their cranks being about 90° apart. At F is a fire (hot body), at E a water jacket (refrigerator), and H is the regenerator; the cycle being essentially that of Stirling, and the operations as follows:—

1. Air compressed in D takes heat and expands: thus work is done *by* the gas.
2. The air is transferred to C nearly at constant volume, giving heat to H.
3. Air under C is compressed, losing heat to E: thus work is done *on* the gas.
4. The air is re-transferred to D at nearly constant volume, taking heat from H.

Digitized by Google

APPENDIX III

(FOURTH EDITION.)

CHAPTER IV.

P. 102. **Welding.** — A very satisfactory and interesting welding machine, which will also serve for a certain amount of forging, has been introduced by the Nicholson Tool Company of Newcastle-on-Tyne: it is here illustrated in Fig. 880. A frame

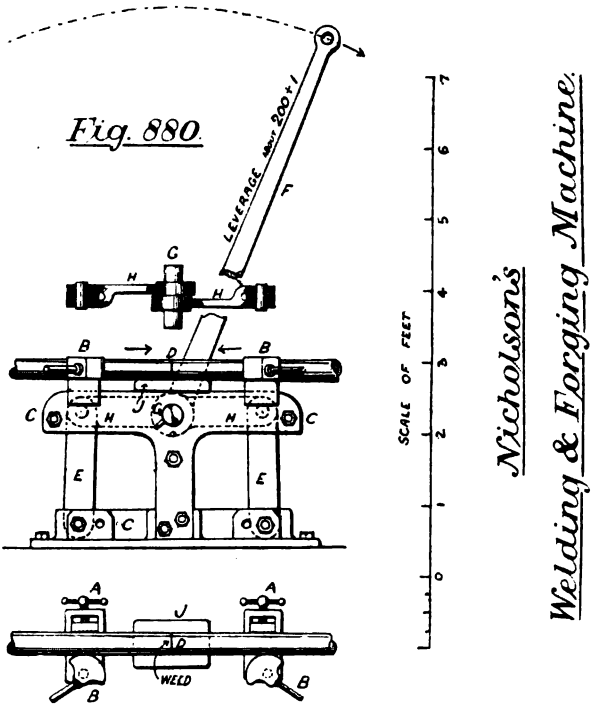

C C carries a table or anvil J to support the work, and two vices B B to hold it. The latter are fixed to the upper end of the rocking levers E E, wile a hand lever F operates an eccentric shaft

Digitized by Google

connected to E E by the coupling rods H H. The bars to be welded are first placed cold in the vices, and the screws A A are adjusted to suit the thickness of the work, so that the final grip may be given by the eccentric jaws B B. The welding heat is next obtained, and, while two men put the pieces quickly in the vice jaws with the hot surfaces in contact at D, a third man pulls over the lever F, and thus squeezes the joint to a perfect weld which may be finished with hammer in the usual way. The leverage is about 200 to 1, and a pressure of about 20 tons is produced at J. The machine may be further applied to jumping or upsetting, and a reversal of pull will elongate or draw out a bar.

CHAPTER V.

P. 138. **Loss on Return Stroke.**—It is shown in this chapter that the return stroke in reciprocating machine tools, when no useful work is done, generally takes place at a higher speed. The introduction of electric motors for individual driving has enabled us to measure the work absorbed on both advance and return strokes, and has shown that in planing machines the total work used on each stroke is almost identical, though that of the return stroke is slightly less. This means that the work at the tool point is but a small part of the *total work* of driving and cutting. Further, if the return stroke be done in one *n*th of the time of the advance, the *horse-power* on the return is about *n* times that of the advance stroke, which, of course, follows from the previous statements. It is evident, therefore, that the quick return stroke does not save in work done, but is a saving in time, while absorbing a higher horse power, proportional to speed.

CHAPTER VII.

P. 831. Appendix II.:—**Automatic Feed-Water Regulator.**—This apparatus is an important adjunct to any water-tube boiler, for where little water is contained the level fluctuates considerably with variable engine-power. The well-known Belleville

Digitized by Google

regulator has been much improved in Mr. Andrew Forster's invention, Fig 881. The gun-metal casing A is fixed to or near the boiler, so that flange B connects to water, and C to steam. The level is

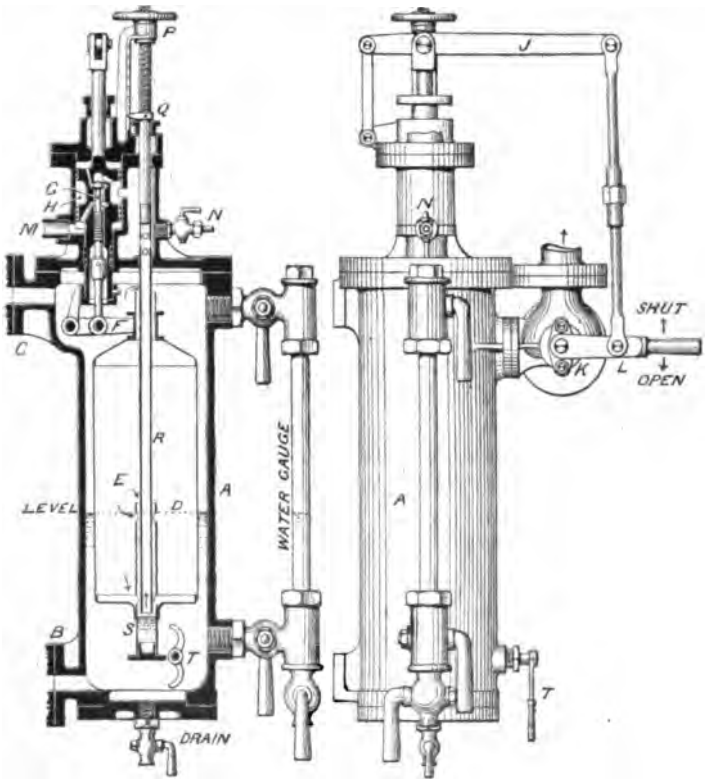

Forster's Automatic Feed Regulator. *Fig. 881.*

at D, but may be adjusted within certain limits. The hollow float E is connected to lever F, so as to act on the 'pilot' valve G, thus distributing steam to the large piston H, which again acts on the feed cock K through the lever J. If the feed be too slow, the

Digitized by Google

float falls, valve G moves downward, admitting steam to top of H, which thus opens feed valve still wider. But the movement of H downward also cuts off steam supply at G, and all is quiet again with increased rate of feed. Conversely, if the feed be too rapid, the float rises, lifting G, and, the top of H being thus opened to exhaust M, the unbalanced steam pressure at bottom causes H to rise and slightly close the feed valve. Also the act of rising once more cuts off G and restores equilibrium with a decreased rate of feed.

To raise the water level permanently, shut off steam at C and open the blow-out cock N, thus flooding the float with water. Next, turn the screw P till pointer Q shows level required. Keeping N still open, re-open the cock at C, and the water level falls, the extra water in the float being blown out, until the steam freely flows through bottom end of pipe R, when the definite weight of water remaining at S will keep the float at the exact level indicated by Q. In lowering the water level the flooding need not be done, for when R is depressed to the proper position, the superfluous water may be removed at S by blowing through. The hand gear at T is for testing the freedom of the float.

CHAPTER VIII.

P. 361. **Stress.**—It is well to warn students of the various uses to which this word has been put. Most authorities agree in applying it generally to the state of the molecules; but while some also take it to mean *unit stress* or stress per square inch, speaking of total stress as *load*, others have used it for total stress only, calling unit stress *intensity of stress*. It has therefore been deemed advisable in this book to firstly use the word for *state of stress* in a general sense, and afterwards to speak more particularly of **stress per square inch**, and of **total stress.**

P. 407. **Value of w''**, or the space between rivets in a single-riveted lap joint, as deduced from the formula at head of p. 407, depends on the material of the rivet and plate. Assuming safe stresses as follows:

Digitized by Google

	steel plates	iron plates	copper plates
Tensile stress f_t	6 tons	4 tons	2 tons
	steel rivets	iron rivets	copper rivets
Shear stress f_s	5 tons	$3\frac{1}{2}$ tons	$1\frac{1}{2}$ tons

and deducing the formula for w'' as :

$$w'' = \frac{f_s}{f_t} \times \frac{3{\cdot}1416}{4 \times {\cdot}6} = 1{\cdot}31 \frac{f_s}{f_t}$$

For steel plates and steel rivets :

$$w'' = 1{\cdot}31 \times \frac{5}{6} = \underline{1{\cdot}09 \text{ ins.}}$$

For iron plates and iron rivets :

$$w'' = 1{\cdot}31 \times \frac{3{\cdot}5}{4} = \underline{1{\cdot}14 \text{ ins.}}$$

For steel plates and iron rivets :

$$w'' = 1{\cdot}31 \times \frac{3{\cdot}5}{6} = \underline{{\cdot}76 \text{ in.}}$$

For copper plates and copper rivets :

$$w'' = 1{\cdot}31 \times \frac{1{\cdot}5}{2} = \underline{{\cdot}98 \text{ in.}}$$

P. 419. Strength of Hollow Shafts.

Example 66.—A hollow steel shaft is to be designed so as to meet safely a twisting moment of 280 ton feet. The internal diameter being 3 ins., find the external diameter :

$$\frac{D^4 - d^4}{D} = \frac{16\,T_m}{f\pi} \qquad D^4 - \frac{16\,T_m}{f\pi} D = d^4$$

$$\therefore\ D^4 - \frac{16 \times 280 \times 7}{7 \times 22} D = 81 \qquad \text{or } D^4 - 203\,D - 81 = 0$$

This equation may be put in the form

$$D^4 - 203\,D - 81 = y$$

and a curve may be constructed showing y for various values of D, the correct value of D being that corresponding to $y = 0$. Thus :

$D = 4$	$y = 256 - 812 - 81$	$= -637$
$D = 5$	$y = 625 - 1015 - 81$	$= -471$
$D = 6$	$y = 1296 - 1218 - 81$	$= -3$
$D = 7$	$y = 2400 - 1421 - 81$	$= +898$
$D = 8$	$y = 4100 - 1624 - 81$	$= +2395$

Digitized by Google

These values of y and D have been co-ordinated in Fig. 882, and a curve has been drawn whose vertical ordinates vary from -637 to $+2395$. The point where the curve crosses the axis of D shows D = 6 when $y = 0$. The true answer is

D = 6·005 ins.

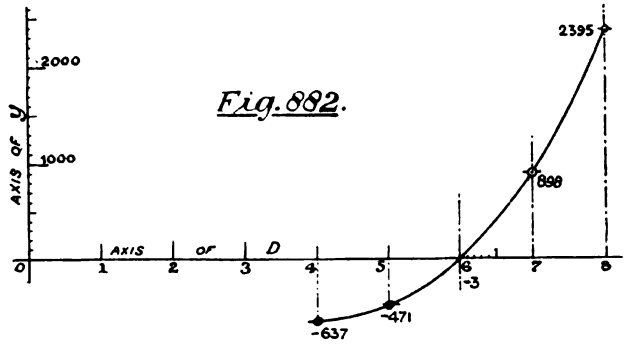

Fig. 882.

Solving Hollow-Shaft Equation.

P. 438. **Distribution of Shear stress in Beams.**—Just as the summation of vertical forces (loads and reactions) in a beam will give a curve of total vertical shear at every section (p. 853), so the summation of horizontal forces (tensile and compressive stresses) will produce a curve of horizontal shear stress intensity; and, as the tensile stresses oppose the compressive stresses, the greatest shear is at the neutral axis. The summation (*see* p. 851) of the stress areas of p. 431 must then proceed from the upper or lower fibre to a maximum at the centre; and two examples have been given in Fig. 883 to show how this should be done. Again, any elemental cube must be subject to vertical shear on its vertical sides, and horizontal shear on its horizontal sides, the one stress being caused by the presence of the other; hence the distribution of vertical and horizontal shear stresses over a section are identical. Finally the scale of diagrams c c, Fig. 882, can easily be found by equating the area *a b c d* to the total vertical shear at the given section; and *d b*, the maximum unit stress, is thereby arrived at.

Digitized by Google

P. 469. **Redundant Members.** — It has already been mentioned that the static force diagram shows no stress in a

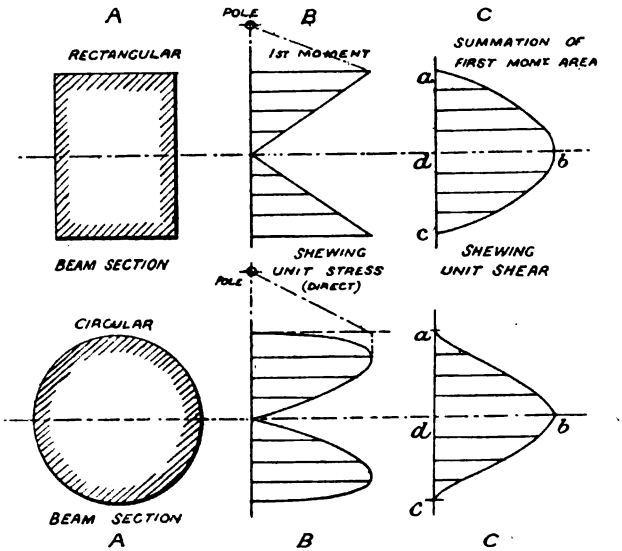

Distribution of Shear Stress.
Fig. 883.

redundant or superfluous member; but as soon, however, as the structure is subjected to deformation, and not till then, such a member receives stress on account of the strain in the remaining bars, the static stresses in the latter being at the same time more or less altered. The problem, therefore, can only be solved by reference to the *work done* on the bars. Now when there are no redundant members in a structure

$$\text{no. of members} = 2(\text{no. of joints}) - 3$$

a rule easily verified, and useful for discovering the number of extra bars.

Having ascertained these, there are two methods of finding the stresses set up in them. Assuming the whole structure to be

Digitized by Google

strained by the load, the length and cross section of every bar being known, the total work done can be expressed. When this has the lowest possible value, the true stresses in the extra bars will have been found: hence the expression is differentiated with regard to each 'redundant' stress, and equated to zero. The other method, the one which we shall here explain, is best understood by an examination of two cases.

Case I.—Imagine a properly closed structure, without extra bars, consisting, say, of four triangles. No load is applied from without, and there is therefore no stress in any member. Now let there be two superfluous members, which, being simply fitted to the framing, are not under stress: neither are the other bars stressed. Next, screw up the extra bars so as to put a stress (compressive or tensile) within them, and immediately stresses are felt upon all the other members. The work done on the extra bars will be of opposite sign to that done by them individually upon the remaining members, for, while one action tends to compress, the other tends to expand the framing. Also these two quantities must be equal, for one is caused by the other.

Let the extra bars be called a and b respectively, and the remaining bars 1, 2, 3, 4, 5 and 6. Also let

F_a = total stress in bar a
F_b = ,, ,, ,, ,, b
$F_a c_{1a}$ = ,, ,, ,, ,, 1 caused by F_a
$F_b c_{2b}$ = ,, ,, ,, ,, 2 ,, ,, F_b

Then, taking the action of each force F_a and F_b separately,

work done on bar a = work done on other bars
(minus) (plus)

$$-\frac{F_a}{2}\Delta_a = \frac{F_a}{2}(c_{1a}\Delta_1 + c_{2a}\Delta_2 \ldots\ldots + c_{6a}\Delta_6) \quad \ldots\ldots\ldots(1)$$

$$-\frac{F_b}{2}\Delta_b = \frac{F_b}{2}(c_{1b}\Delta_1 + c_{2b}\Delta_2 \ldots\ldots + c_{6b}\Delta_6) \quad \ldots\ldots\ldots(2)$$

Clearly, then, there would be just as many equations as there are extra bars.

Case II.—Taking the same structure, let external forces be applied to it. Firstly, treat the whole figure statically, leaving

Digitized by Google

out the extra bars, and find the forces in every member, calling them F_{s1}, F_{s2}, &c. Then, taking in the extra bars,

$$\left.\begin{matrix}\text{whole stress}\\ \text{in}\\ \text{any member}\end{matrix}\right\} = \text{static force} + \left\{\begin{matrix}\text{force caused}\\ \text{by stress in}\\ \text{extra bar } a\end{matrix}\right\} + \left\{\begin{matrix}\text{force caused}\\ \text{by stress in}\\ \text{extra bar } b\end{matrix}\right.$$

$$\therefore \quad F_1 = F_{s1} + c_{1a}F_a + c_{1b}F_b \quad \ldots\ldots\ldots\ldots\ldots\ldots (3)$$

$$F_2 = F_{s2} + c_{2a}F_a + c_{2b}F_b \quad \ldots\ldots\ldots\ldots\ldots\ldots (4)$$

and so on for six equations, corresponding to the bars of the structure. But

$$\Delta = F\frac{l}{aE} = Fm, \text{ say} \quad \ldots\ldots\ldots\ldots\ldots\ldots (5)$$

Hence from (1) we have, eliminating $\frac{F_a}{2}$

$$\begin{aligned} -F_a m_a &= c_{1a}F_1 m_1 + c_{2a}F_2 m_2 \ldots\ldots\ldots + c_{6a}F_6 m_6 \\ \text{(from 3 and 4)} \quad &= c_{1a}m_1 (F_{s1} + c_{1a}F_a + c_{1b}F_b) \\ &\quad + c_{2a}m_2 (F_{s2} + c_{2a}F_a + c_{2b}F_b) \\ &\quad + \ldots\ldots\ldots\ldots\ldots\ldots\ldots \\ &\quad + c_{6a}m_6 (F_{s6} + c_{6a}F_a + c_{6b}F_b) \quad \ldots\ldots\ldots\ldots (6) \end{aligned}$$

This is the final equation for bar *a*. From (2) we have:

$$\begin{aligned} -F_b m_b &= c_{1b}m_1 (F_{s1} + c_{1a}F_a + c_{1b}F_b) \\ &\quad + c_{2b}m_2 (F_{s2} + c_{2a}F_a + c_{2b}F_b) \\ &\quad + \ldots\ldots\ldots\ldots\ldots\ldots\ldots \\ &\quad + c_{6b}m_6 (F_{s6} + c_{6a}F_a + c_{6b}F_b) \quad \ldots\ldots\ldots\ldots\ldots (7) \end{aligned}$$

which is the final equation for bar *b*.

In like manner there would always be as many equations as extra bars, and as many parts on the right side of each equation as there might be 'static' bars.

Now, in using these equations practically, F_a and F_b are not known, but $c_{1a}\ldots\ldots c_{6a}$, and $c_{1b}\ldots\ldots c_{6b}$ are known from the shape of the structure, $F_{s1}\ldots\ldots F_{s6}$ from the static diagram, and m_1 to m_6, m_a, and m_b from the length, sectional area, and E of the respective bars. Hence we have two simple simultaneous equations (6) and (7), from which to find the values F_a and F_b. When these are worked out, the stress in the other bars can be found from (3) and (4).

Digitized by Google

CHAPTER IX.

P. 510. **Proof that normal to contact passes through meet of pitch lines.**—In Fig. 884, let A and B be centres of rotation, and C the common normal to tooth surface, —— a continuous straight line because the surfaces are tangential. Also let C and D be centres of curvature.

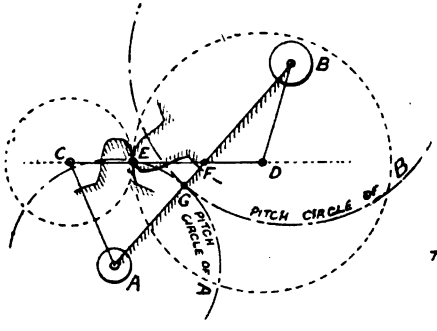

Fig. 884.

Proof
OF NORMAL PASSING THROUGH MEET OF PITCH CIRCLES

Now, for a very small motion we may substitute a quadric chain A B G D for the wheels, where A B and C D are cranks, and C D a coupling rod; for the curved surfaces at E are merely parts of huge link pins having C and D for centres respectively. Therefore, for any one instant the angular velocities of wheels and cranks are identical.

Now, angular velocities of wheels A B are inversely as pitch circle radii, or as B G : A G. And angular velocities of links A and B are inversely as the divisions of the fixed link made by the coupler (see pp. 863–4) or as B F : A F. Hence B G = B F and A G = A F : the points G and F must coincide: and the normal C D must pass through the meet G.

P. 554. **Electric Transmission:** further notes.

Units.— Electric energy is now more often estimated by merely multiplying E.M.F. by current, and the volt-ampère unit thus obtained is termed a *watt*. Thus

$$\text{Energy in watts} = EC$$

and

$$\text{Electrical H.P.} = \frac{EC}{746}$$

Digitized by Google

It appears, then, that an electrical H.P. (E.H.P.) is 746 watts, or 33,000 foot pounds per minute, as before; and the only reason for the name is to indicate that it is power given off a dynamo or a motor. A *kilowatt* consists of 1000 watts.

The Board of Trade unit for quantity of energy supplied is 1000 watts acting for 1 hour, or *1000 watt-hours.*

$$\therefore \begin{matrix}\text{Board of Trade}\\ \text{Electrical unit}\end{matrix}\Big\} = \frac{1000}{746} = 1\tfrac{1}{3} \text{ H.P. for 1 hour.}$$

Efficiencies.—The losses in a dynamo are said to consist of two parts, the one due to *electric resistance* of the wire coils, and the other to friction, hysteresis, and eddies, called *stray energy.* Now, if we could imagine a dynamo whose only loss was that of current resistance, or $C^2R \div 746$ (see p. 553), E.H.P. being that *given out,*

$$\text{Electrical efficiency} = \frac{\text{E.H.P.}}{\text{E.H.P.} + (C^2R \div 746)}$$

Similarly we may suppose the only loss to be the stray energy, and the efficiency could then be reckoned on that alone. Take H.P. to be that *put in,* we might say

$$\text{Mechanical efficiency} = \frac{\text{H.P.} - \text{stray power}}{\text{H.P.}}$$

But, as in all dynamos, there are both electrical and mechanical losses, the nett efficiency, or

$$\text{Commercial efficiency} = \text{mech. effy.} \times \text{elec. effy.}$$

and thus we account for all losses. The H.P. supplied is often spoken of as mechanical H.P., while that given off is electrical H.P. Hysteresis is a heat loss caused by resistance to magnetisation and demagnetisation.

Example 67.—A dynamo is designed to produce 200 ampères of current at a pressure of 100 volts. State this in Board of trade units. Calculate also the mechanical H.P. required to drive the machine, and the E.H.P. given off, if the commercial efficiency is 85 °/₀.

Digitized by Google

$$200 \times 100 = 20{,}000 \text{ watts}$$
$$\text{or in one hour} = 20{,}000 \text{ watt hours}$$
$$= \frac{20{,}000}{1000} = 20 \text{ Board of Trade units}$$
$$\text{Again } 20 \times 1\tfrac{1}{3} = 26{\cdot}5 \text{ E.H.P. given off}$$
$$\text{and } \frac{26{\cdot}5}{{\cdot}85} = 31{\cdot}2 \text{ M.H.P. to drive it}$$

P. 568. **Live Rollers.**—Messrs. Crandall and Martin (Am. Soc. C.E.) experimented on rollers 1 inch to 4 ins. diameter, and $1\frac{1}{2}$ ins long. They found, with *four* crushing surfaces,

$$P = \frac{Q\delta}{\sqrt{r}}$$

where δ = ·0063 for C. I. rollers
= ·012 for W. I. rollers
= ·0073 for steel rollers

They also found the crushing load to be represented in lbs. by 880 × roller diameter.

580. **Efficiencies in long-distance transmission of power.** — The following table has been given by Beringer, showing total efficiency of transformation and transmission, and, though probably open to some correction, is the best at present obtainable:

EFFICIENCIES PER CENT.

Distance transmitted in miles	Hydraulic Power	Compressed Air without re-heating	Wire Rope
$\frac{1}{2}$	50	55	91
1	49	54	85
3	41	51	61
5	37	50	43
10	26	43	21
13	18	39	11

Digitized by Google

By plotting the efficiencies to a base of distance transmitted, as in Fig. 885, we have a graphic means of determining the

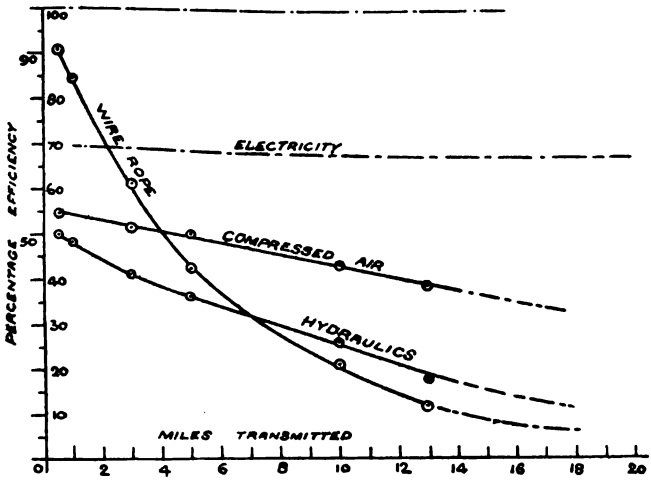

Comparison of Efficiencies in Long-distance Transmission. Fig. 885.

relative advantages of the three systems. A probable line for the efficiency of electric transmission is also shown. For very long distances it cannot be approached by any of the other methods

A philosophical result of immense importance may be deduced from a consideration of this diagram. In wire-rope, *solid parts* are transmitted, and the efficiency falls off rapidly: hydraulics transmit *liquid parts*, and the efficiency holds up better: *gaseous parts* are carried in compressed air transmission, and the efficiency is considerably raised: but the greatest success of all is obtained by electricity, where a total efficiency of 67 % has been proved over a distance of 118 miles. These facts show the electric current to be either etheric vibration or the passage of a very attenuated fluid.

Digitized by Google

CHAPTER X.

P. 600. **Value of Joule's equivalent.** — Rowland has repeated Joule's experiment of the churning of water, but on a much larger scale and for a longer time, driving the paddles by motive power and measuring the energy with a dynamometer. The much larger values thus obtained produce a greater approach to accuracy, and the altered value of J = 778 is now pretty universally accepted. Osborne Reynolds has since reviewed all known experiments, including those of Joule, and by careful correction deduces a result closely approximating to that of Rowland. As the correction is an increase of only ·515 of one per cent, the values within this book have not been altered.

Now, on p. 603, C_v is deduced from C_p when J is known; conversely J may be found if γ is obtainable directly. This is not impossible, though difficult to do accurately. In books on physics we find

$$\text{velocity of sound in air at } 32^\circ = \sqrt{g\gamma H}$$

where $g = 32{\cdot}2$ and $H = PV = 26214$ ...(p. 590)

Hence $\gamma = 1{\cdot}408$ and $C_v = \frac{C_p}{\gamma} = \frac{{\cdot}2375}{1{\cdot}408} = {\cdot}167$

Now $K_p - K_v = c$ .....(p. 604)

and $\frac{K_p}{K_v} = \gamma$ .....(p 603)

also $c = 53\,28$ .....(p 590)

$$\therefore\ K_p = \frac{K_p}{K_p - K_v}c = \frac{K_p}{K_v\left(\frac{K_p}{K_v} - 1\right)}c = \frac{\gamma}{\gamma - 1}c$$

But $K_p = JC_p$

$$\therefore\ J = \frac{\gamma}{\gamma - 1} \cdot \frac{c}{C} = \frac{1\,408}{{\cdot}408} \cdot \frac{53\,28}{2375} = \underline{774}$$

Prof. Thurston has pointed out a curious though totally unexplained coincidence, viz. that most probably

Digitized by Google

$$\gamma = 1 + \frac{4}{\pi^2} = 1{\cdot}405285$$

By using this quantity, $J = \underline{778}$

P. 625. **Nominal H.P. of Engines and Boilers.**—The proper method of stating power is undoubtedly by actual performance, and thus we obtain the I.H.P. and B.H.P. respectively. Nevertheless, although the older 'nominal' H.P. has fallen into bad odour through its gradually receding so far from the actual H.P., it is extremely convenient, for rating purposes, to have some rule for estimating the power of an engine, based on general dimensions, especially where an actual test is inconvenient. Neither can there be any objection to this, so long as the rule approximates to truth, and is never preferred to the latter.

Engine H.P. — The North East Coast Institution made a careful examination of marine engines and boilers in 1888, from which they devised a rule for *Normal Indicated H.P.* as they termed it, thus

$$\text{N.I.H.P.} = \frac{(D^2 \sqrt[3]{S} + 3H)\sqrt[3]{P}}{100}$$

where D^2 = added squares of every cylinder diameter, in inches.
S = piston speed in feet per m.
H = heating surface of boiler, in square feet.
P = working pressure in boiler, in lbs. per square inch.

Of course, this rule was based on the practice of 1888, and might require alteration from time to time, mainly on account of altered practice regarding expansion.

Boiler H.P.—By the horse power of a boiler we mean that power which would be developed if the boiler were to supply steam to an average engine. To make a simple rule, certain average constants must therefore be assumed, which are

C = coal burnt per sq. ft. of grate surface per hour, say 20 lbs.
E = water evaporation per lb. of coal burnt, say 8 lbs.
S = weight of steam used per I.H.P. per hour by the engine connected with the boiler, say 20 lbs.

Suppose, then, we require to know the I.H.P. obtainable from

Digitized by Google

three Lancashire boilers of 7 ft., 7'..6", and 8 ft. diameter respectively, on the previous premises, we must first find G the grate surface. Taking all grate width at 6 ft., we have:

For 7 ft. boiler, grates about 6 ft. long, and area = 36 sq. ft.

$$\therefore \text{ I. H. P.} = \frac{G \times C \times E}{S} = G\frac{20 \times 8}{20} = 8G = \underline{288}$$

Similarly for the 7'..6" boiler, grates about 6'..6" long, and area = 39 sq. ft.

$$\therefore \text{ I. H. P.} = 8G = 8 \times 39 = \underline{312}$$

And for the 8 ft. boiler, grates about 7 ft. long, and area = 42 sq. ft.

$$\therefore \text{ I. H. P.} = 8 \times 42 = \underline{336}$$

For other boilers the evaporation would depend upon the efficiency as compared with the above; and perhaps the steam used by the engine might be raised to 30 lbs. wt. per I. H. P. hour.

P 674. **Acceleration of Engine Piston:** Klein's construction.

When drawing an acceleration curve to a given velocity curve two cases present themselves, one where the base line represents time, and the other where it shows distance. The construction for the former, p. 860, is easily and correctly met by graphic differentiation. For a distance base, Proell's method, pp. 492 and 863, is very convenient for general cases, but when adopted for the harmonic motion of an engine piston, as at p. 674, it does not give absolute results at the dead points. We shall, therefore, here describe the construction due to Prof. Klein of America, which, though more cumbersome, and only applicable to the crank and connecting-rod, gives certain and accurate values at all points of the stroke.

Referring to Fig. 886, let A B be the crank and B C the connecting-rod. On B C as diameter describe a circle. Producing C B to D, describe a second circle having B as centre and B D as radius, and cutting the first circle in E and F. Then, E F will cross A C in G, and G A will be the *acceleration* of C, which

Digitized by Google

may be set *up* at C H. The same construction is followed when the crank is at B_1, and the piston at C_1, viz. the circle on $B_1 C_1$

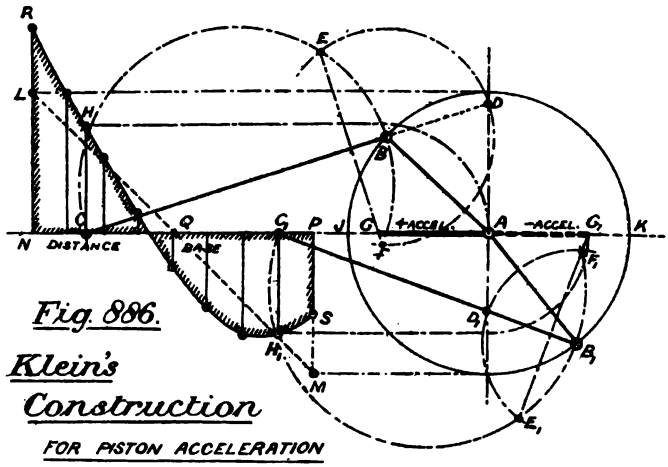

Fig. 886.

Klein's Construction

FOR PISTON ACCELERATION

will cut the circle of centre B_1 at E_1 and F_1, and a line being drawn to meet A C produced gives A G_1 as the *retardation* to be set *down* at $C_1 H_1$.

The scale may be found from the following considerations:—whenever the crank pin reaches the dead points J or K, with tangential velocity v, the reciprocating masses are flung to left or right respectively with a force calculated from the formula $wv^2 \div gR$ (*see* p. 400). But inertia force is also represented by $wf \div g$ (pp 473 and 674), where f = acceleration along J K

$$\therefore \quad \frac{wv^2}{gR} = \frac{wf}{g} \qquad \text{and } f = \frac{v^2}{R}$$

for *pure harmonic motion* at dead points only. This condition is shown by L N and P M, which must each equal $v^2 \div R$, thus showing the scale to be used. Further, when a finite length of connecting rod is adopted, of length = $c \times$ crank arm, the end acceleration N R = $\left(1 + \frac{1}{c}\right)$ N L, and that at P S = $\left(1 - \frac{1}{c}\right)$ P M.

P. 766. **Calculation of Specific Volume of Dry**

Digitized by Google

Saturated Steam, when the temperature, pressure, and latent heat are known.

In his 'Steam Engine,' Cotterill shows a very neat method of finding the specific volume V. Taking the pv diagram in Fig. 887, for the Carnot cycle

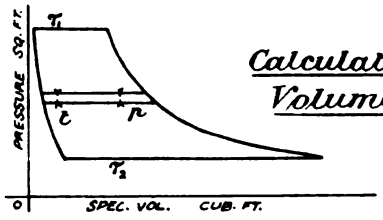

Calculation of Specific Volume of Steam.

Fig. 887.

$$\text{Efficiency} = \frac{T_1 - T_2}{T_1}$$

Now heat expended per lb. weight of steam will be L_1 the latent heat at temperature T_1.

$$\therefore \text{ work done per lb. weight of steam} = L_1 \frac{T_1 - T_2}{T_1}$$

which is also equal to the area of the diagram.

Now suppose $T_1 - T_2$ to be made very small, we have per lb. weight of steam

$$\text{Area of diagram} = \text{work done}$$

$$\text{or difference of pressure} \times \text{spec. vol.} = \text{latent heat} \times \frac{\text{difference of temp.}}{\text{absolute temp.}}$$

or
$$p\,(V - v) = \frac{L\,t}{T\,p}$$

$$\therefore V = \frac{L\,t}{T\,p} + v$$

which is the same result as on p. 767; and the method of use is also as there described.

Pp. 611 and 767. **Engine Efficiency.**—It is interesting to view the various losses in an engine and boiler system diagrammatically, so as to clearly demonstrate what are unavoidable and what may be improved. The case of a steamship has

Digitized by Google

been thus treated from end to end by Prof. Weighton, and by Mr. Leavenworth, and is here given in Fig. 888. Commencing at A with the heat in the coal as 100 % we find some 4·% of this lost

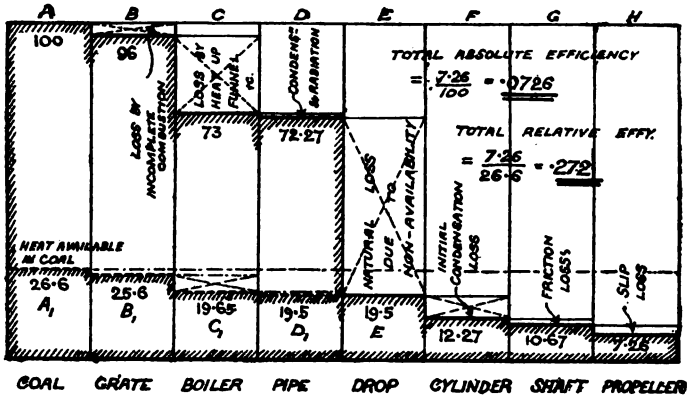

Diagram of Energy Losses
FROM BOILER FURNACE TO SHIP PROPELLER

Fig. 888.

at the grate B due to incomplete combustion or dilution. A further and very great loss occurs in the boiler at C on account of heat passing up the funnel, leaving us with only 73 % of the original heat to go to the steam pipe. A slight loss at D is caused by radiation and condensation in the steam pipe, and 72·27 % is given to the engine as dry steam. Now comes the great unavoidable natural loss on account of *unavailability,* present in all prime movers, whether driven by heat, wind, or water, so that the cylinder could not possibly give out more than ·27 % of the steam-pipe energy. On this amount, however, there is the loss by initial condensation, which is very large, so that only 12·27 % of the coal energy is 'indicated.' The final losses are the friction of the engine and propeller shaft, and the slip of the propeller, so that the ship is moved forward with only ·0726% of the original coal energy, supposing all the heat units to be available.

It does not appear, however, that the cylinder should be specially debited with the loss by unavailability, and more probably the best way is to deduct it from the coal energy in the first place.

Digitized by Google

The truth then is, that if the temperatures at present adopted in boiler and condenser show the widest range reasonably obtainable, the

$$\text{Available energy} = \frac{T_1 - T_2}{T_1} \times \text{gross energy},$$

which means that the available energy in the coal is only about 26·6 % of the energy shown by the calorific value. Taking then the lower diagram, $A_1\ B_1\ C_1\ D_1$ shows the correct way of looking at the matter, and the cylinder is then only made to account for the condensation loss. In the upper diagram the greatest loss appears to be in the funnel, but in the lower diagram this is fought closely by initial condensation. The total efficiencies are ·0726 absolute, and ·272 relative, the latter being the most useful value for reference. This means that *preventible losses constitute two-thirds of the total available energy.* The figures are obtained as follows :—

Coal.	Grate.	Boiler.	Pipe.	Drop.	Cylinder.	Shaft.	Propeller.	
1	× ·96	× ·76	× ·99	× ·27	× ·63	× ·87	× ·68	= 0726

·0726 ÷ ·266 = ·272 total relative efficiency.

Engine and Boiler Trials.—The object of experiment on engines and boilers is not only to find their efficiency, but to discover also the exact location of the various losses, in order to obtain data which may lead to their diminution. It is proposed to state here in general terms how such trials are conducted.

Whatever boiler or engine we are experimenting upon the procedure will arrange itself under: (1) observations taken about every ten minutes, (2) calculations and conclusions, (3) diagrammatic statements, and (4) the balance-sheet of receipts and expenditure of energy.

Boiler Trials.—All the results are stated in terms of *one lb. of dry fuel*, and in thermal units. Also they may be reckoned from atmospheric temperature and pressure as datum lines, or 32° F. may be the zero employed. There are arguments in favour of each method.

Digitized by Google

BALANCE SHEET FOR BOILER.

Heat supplied	Heat used { both usefully and wastefully	Per cent.
To:	By wasteful process:	
(1) Calorific value of one lb. of dry fuel (viz. deducting water both external & internal)	(2) Loss by heating of water in fuel.....	.....
	(3) Loss in flue gases	.....
	(4) Loss by ashes and clinker	.....
	(5) Loss by unburnt fuel	.....
	(6) Loss by radiation and unaccounted for.....	.....
	By useful process:	
	(7) Evaporation of water	.....
.....	.....	100

(1). *Calorific value* must be found both by practical heat test and by chemical analysis (pp. 697 and 906). For the latter, Mahler's empirical formula is often used to obtain greater accuracy than by the one on p. 906, thus

$$\left.\begin{matrix}\text{Calorific value}\\ \text{per lb. wt.}\end{matrix}\right\} = 14650\,C + 62100\,H - \left\{ 5400(O+N) \right\}$$

An intermediate value may be finally taken, but there is the greater error in the practical heat test, and the result should lean to the side of the chemical analysis.

(2). *Loss by moisture in fuel* is that due to evaporation of water formed by union of oxygen and hydrogen when leaving the fuel (p. 697, line 20), as well as to the free moisture. Such water absorbs 966 heat units per lb. wt., in addition to the heat required to superheat it to the temperature of the fuel.

(3). *Loss in heating flue gases.*—First, find weight of flue gases per lb. of fuel, either by direct measurement of draught speed with anemometer, or by comparison of flue gas composition with that of the fuel. By the former method, let

Digitized by Google

A = area of grate in square feet.
V = velocity of air in feet per min.
t_2 = temperature of flue gases, found by pyrometer.
t_1 = temperature of stokehole
τ_1 = absolute temp. of do.
P = pressure of atmosphere in lbs. per sq. ft.
w = weight of 1 cub. ft. of air at P.
k = coal used per m in lbs

Then, AV cub. ft. of air per m. are used, whose weight per cub. ft. (*see* p. 590)

$$w = \frac{P \times 1}{53{\cdot}2\tau} = \frac{14{\cdot}7 \times 144}{53{\cdot}2\tau} = \frac{39{\cdot}4}{\tau}$$

$$\text{But } \frac{AVw}{k} = \text{weight of air per lb. of coal}$$

And, as Total wt. × sp. ht. × temp. rise = total heat

$$\therefore \left.\begin{matrix}\text{Heat units} \\ \text{wasted per lb. of coal}\end{matrix}\right\} = \left\{\frac{AVw}{k} + k\right\} C_p(t_2 - t_1)$$

Note that C_p = specific heat of the flue gases at constant pressure and is almost always exactly ·25.

The second method may be briefly stated as follows :—

(*a*) Find % volumetric composition of flue gases, and convert at once into % weight composition.

(1 cub. ft. CO_2 at 32° weighs ·122 lb
1 cub. ft. N at 32° weighs ·078 lb.
1 cub. ft. O at 32° weighs ·089 lb.)

(*b*) Find weight of CO_2 per lb. of coal, thus :

$$\underset{\text{in coal}}{\%C}\ (1 \text{ lb. C} + 2{\cdot}66 \text{ lb. O}) = \underset{\text{in coal}}{\%C}\ (3{\cdot}66 \text{ lb. } CO_2) \ldots \left(\begin{matrix}\textit{see} \text{ line } 23, \\ \text{page } 687.\end{matrix}\right)$$

(*c*) Hence find by proportion the total weight of each flue gas separately, per lb. of coal.

(*d*) From

$C_p \times$ wt. of each gas per lb. coal × rise of temp.

the heat given to *each gas* may be found, and thus the *total heat given to the mixture* can be deduced per lb. of fuel, by addition.

(C_p = ·216 for CO_2, ·238 for air, ·244 for N, ·218 for O).

Digitized by Google

(4). *Loss by ashes and clinker.* — This means the heat taken away when clearing the fires. It can only be reckoned by weighing the ash and clinker removed, and making a rough estimate of its temperature. If t_a = temp. of ash and t_1 that of stokehole, while ·25 is specific heat of ash, we have:

$$\left.\begin{matrix}\text{Heat lost}\\ \text{in B.T.U.}\end{matrix}\right\} = \text{weight} \times (t_a - t_1) \times \cdot 25$$

(5). *Loss by unburnt fuel.*—In analysing a lb. of fuel, the proper percentage of ash will be found. But the ash drawn from the grate is a greater proportionate amount, and the difference of the two will be the *unburnt carbon*, which may be stated per lb. of fuel by the heat units it would produce if burnt.

(6). *Loss by radiation and other causes* is obtained by subtraction in the balance sheet. It would be more correct to estimate the radiation and make a separate statement for 'unaccounted,' but this is never done.

(7). *Heat used in the evaporation of water.*—This is the only useful application of the heat from the fuel. In the first place the quantity of water used, in lbs., must be obtained by measuring the feed supply. The latter is taken from measuring tanks, of which there should be two, one of which is filling while the other empties, and a careful noting of the time each tank is started is all that is required. Water-meters are sometimes used instead of tanks, but should be carefully tested. The total heat in the steam may be reckoned from stokehole temperature (p. 597). Then

$$\left.\begin{matrix}\text{Heat used}\\ \text{per lb. of fuel}\end{matrix}\right\} = \frac{\text{total heat in 1 lb. of steam} \times \text{total lbs. of dry steam}}{\text{lbs. of coal used.}}$$

If the steam passing from the boiler be tested by the calorimeter (p. 878), a small percentage of the total weight will exist as entrained water (priming water), and this is not useful. Therefore the total heat in the dry steam and that in the priming water must be reckoned separately, and the latter will then be put down to wasteful process, and only the former to useful process. Lastly, it is usual, outside the balance sheet, to not only state the

Digitized by Google

actual evaporation per lb. of coal, but also the equivalent evaporation from and at 212°. This will of course be:

$$\text{Equivalent evaporation from and at } 212^\circ \Big\} = \text{actual evaporation} \times \frac{\text{total heat of steam above atmosphere}}{966.}$$

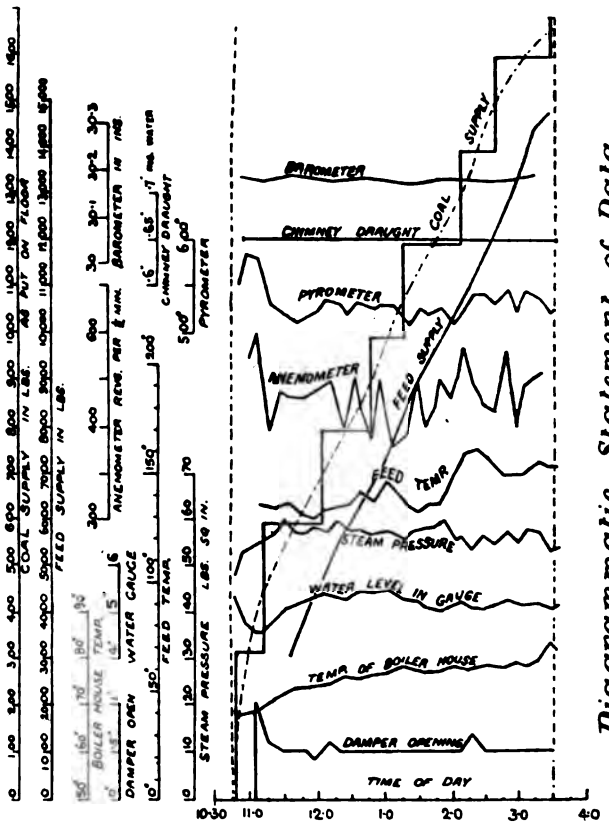

Diagrammatic Statement of Data obtained in Boiler Trial. *Fig. 889.*

And the efficiency of the boiler may be given, being the evaporation heat ÷ heat in coal.

Fig. 889 shows, diagrammatically, some actual data from a boiler trial. Steady gauge and steam pressure are of the highest

Digitized by Google

importance, and the fires should be cleared half an hour before beginning and ending of test, being kept bright at other times.

Steam Engine Trials.—In these experiments we wish to measure the total heat given to the engine, and then to compare it with the indicated and brake energy respectively, the sources and amounts of the losses being determined on the way.

BALANCE SHEET FOR STEAM ENGINE.

Heat supplied B.T.U. per minute		Heat used { usefully and wastefully B.T.U. per m.		Per cent.
To:		By wasteful process:		
(1) Heat in dry steam as measured at engine stop valve ...	...	(2) Given to cooling water	.....	.....
		(3) Left in condensed steam	.....	...
		(4) Radiation and unaccounted	.....	.....
		(5) Left in jacket water...	.....	.....
		By useful process:		
		(6) Converted into work *in cylinder*		
	.....		.....	100

Measurements are made every 10 minutes, and the calculations are from 32° F. as datum line.

(1). *Heat supply.*—The weight of steam and water passing through the cylinder is found by condensing the steam and allowing all the water to be discharged into a calibrated tank. The rise in the tank will then show the weight of wet steam used. But the total heat per lb. weight of steam will be

$$S_h + x L_h$$

Digitized by Google

where x is the dryness fraction; and the latter will be obtained by calorimeter (p. 878) or from the indicator cards and the feed (p. 764). The temperature of the steam will be found from a

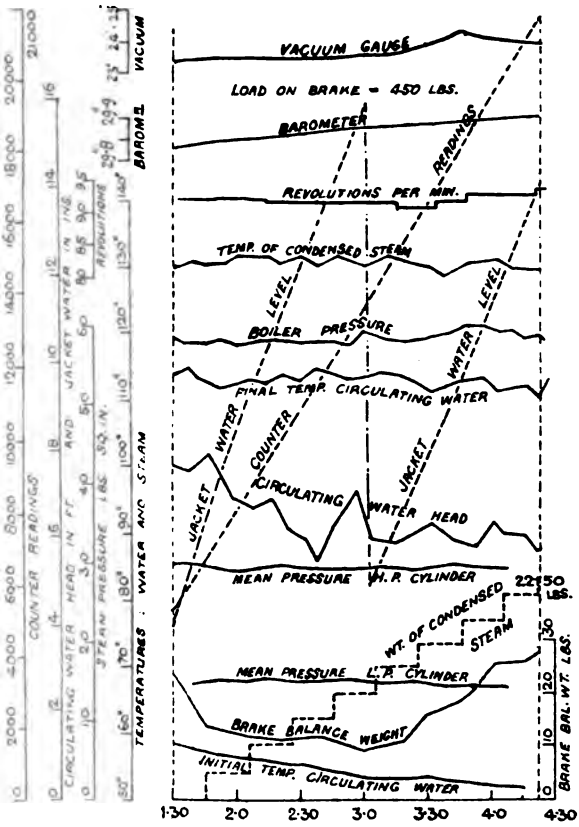

Diagrammatic Statement of Data obtained in Engine Trial. Fig 890.

thermometer fixed on the separator, just before the engine throttle valve; but very often the pressure gauge merely is read, and the corresponding temperature found by reference to tables (pp. 598 and 777).

(2). *Heat given to cooling water.*—The amount of cooling water used is most often measured by a water-meter, though tanks can be adopted also. Then the difference of temperature

Digitized by Google

of this water in passing through the condenser must be multiplied by the number of lbs. per m. to find the total heat used.

(3). *Heat left in condensed steam.*—If all the heat calculations were made from the temperature of the hot well, there would be no need to state this result, but, as we are measuring from 32° datum, the heat left will be

lbs. of steam per m. × (temp. condensed steam — 32)

Note that, if the engine is non-condensing, a hot well or tank must be supplied, though not a condenser proper and air pump.

(4). *Radiation and unaccounted* is found by subtraction in balance sheet.

(5). *Heat left in jacket water.*—The jackets are drained regularly, and the weight of water obtained. Multiply this by the degrees of temperature above 32° to find the heat lost.

(6). *Heat converted into work in cylinder.*—This is the most important statement, and must be arrived at with great care. Indicator cards are taken every 10 minutes, and the I.H.P. calculated from the usual formula (p. 625). Then

$$\frac{\text{foot lbs. per m.}}{772} = \text{B.T.U. per m.}$$

The revolutions may be taken by counter or speedometer, or both.

All the time the experiments are proceeding we are measuring brake H.P. by absorption (p. 576 and 875) and are thus supplied with data for mechanical efficiency (p. 770). Finally, the results may be tabulated as follows:

(*a*) Thermal efficiency (p. 769, case *a* and reckoning from absolute zero)

(*b*) Efficiency of a perfect engine within same limits (*see* p. 769, where T_1 = temp. live steam, and T_2 = temp. hot well)

(*c*) Relative efficiency or comparison ratio (pp. 772 and 883)

(*d*) Mechanical efficiency.

The weight of dry steam per I.H.P. and per B.H.P. per hour should also be given, and indeed are usually the only results stated for commercial purposes. A graphic statement of the data, as in Fig. 890, conduces to clearness.

Digitized by Google

Gas-Engine Trials. — We shall commence with the

BALANCE SHEET FOR GAS ENGINE.

(Datum lines: 32° F. and atmospheric pressure)

Heat supplied in B.T.U. per m.		Heat used B.T.U. p. m. { usefully / and wastefully	Per cent.
To:		By wasteful process:	
(1) Heat of combustion, due to wt. of gas and air passing per m. + heat already in gas and air ...	.....	(2) Heat rejected in jacket water	.....
		(3) Heat discharged in exhaust gases	.....
		(4) Radiation and unaccounted	.....
		By useful process:	
		(5) Heat converted into work in cylinder	.....
	.....		 100

(1). *Heat of combustion* is evidently

$$\text{Cub. ft. of gas per m.} \times \text{calorific value of 1 cub. ft. of the gas.}$$

The former is found by gas-meter, and the latter (about 650 B.T.U.) by analysis, or by means of a gas calorimeter. Add to this the heat already in the gas and air, above 32°, thus

$$\text{B.T.U. per m.} = \text{weight of gas and air per m.} \times C_v \text{ of mixture} \times (t - 32)$$

The value of the C_v and weight of mixture is given in paragraph (3) following, and C_v is used instead of C_p because we are really comparing the heat given with that in an imaginary gas engine which receives at 32° and discharges at exhaust tempera-

Digitized by Google

ture. In such case, the volume of charge and products would, of course, be constant throughout.

(2). *Heat rejected in jacket water.*— The quantity of jacket water passing is often found by a water-meter. Then

$$\text{B.T.U. per m.} = \text{lbs. water per m.} \times \text{difference of entering and leaving temp.}$$

(3). *Heat discharged in exhaust gases.*—We must first find the specific heat, C_v, of the products. If the usual proportion of air to gas be adopted, viz. about 10 or 11 : 1 by volume,

$$\left.\begin{array}{l} C_v \text{ for entering air and gas together} \\ C_v \text{ for products leaving} \end{array}\right\} = \cdot1833$$
$$= \cdot1876$$

These are obtained from the empirical formulæ of Grashof:—

For entering mixture

$$C_v = \frac{\cdot169\,R + \cdot226}{R + \cdot415}$$

which assumes an average sample of coal gas, and takes ·169 as the specific heat of air at 32° constant volume. R always stands for the ratio of air to gas by volume.

For leaving mixture

$$C_v = \frac{\cdot1684\,R + \cdot286}{R + \cdot48}$$

The specific heat of air is taken at ·1684 for the higher temperature.

Sometimes C_p is required in order to arrive at γ. Then at exhaust

$$C_p = \frac{\cdot237\,R + \cdot343}{R + \cdot48}$$

This gives ·258 for 10½ : 1 mixture; and $\gamma = \cdot258 \div \cdot1876 = 1\cdot38$.

Next, we require the weight of mixture passing per minute. For this, two meters are used, one for the air and one for the gas, as they enter the cylinder. Reduce these volumes to their equivalent at 32° from the formula

$$\frac{PV}{T} = \text{constant.}$$

Digitized by Google

Now, the weight of a cubic foot of coal gas at 32° = ·00348 lb., and a cubic foot of air at 32° weighs ·08073 lb. Then,

$$\left.\begin{matrix}\text{Weight of gas}\\ \text{per m.}\end{matrix}\right\} = \begin{matrix}\text{cub. ft. gas}\\ \text{per m.}\end{matrix} \times \begin{matrix}\text{weight of a}\\ \text{cub ft. of gas}\end{matrix}$$

$$\left.\begin{matrix}\text{Weight of air}\\ \text{per m.}\end{matrix}\right\} = \begin{matrix}\text{cub. ft. air}\\ \text{per m.}\end{matrix} \times \begin{matrix}\text{weight of a}\\ \text{cub. ft. of air}\end{matrix}$$

The total weight of mixture being constant up to exhaust, gives also the weight of products.

The exhaust temperature is found by pyrometer in the pipe, so we have

$$\left.\begin{matrix}\text{B.T.U. per m.}\\ \text{in exhaust gases}\end{matrix}\right\} = \begin{matrix}\text{wt. of mixture}\\ \text{per min.}\end{matrix} \times \begin{matrix}C_v\\ \text{of products}\end{matrix} \times \left(\begin{matrix}\text{exhaust}\\ \text{temp.}\end{matrix} - 32°\right)$$

(4). *Radiation and unaccounted loss* is reckoned in the usual manner, by subtraction in the balance sheet.

(5). *Heat converted into work in cylinder.* — The indicator diagrams are somewhat difficult to take, and a good indicator with stiff spring and short stroke must be used. The number of explosions should be found by a counting contrivance attached to the charging valve. Then:

$$\text{I.H.P.} = \frac{pLaN}{33000}$$

where N = number of explosions, L the nett stroke in feet and p the mean effective pressure. Of course, the

$$\text{B.T.U. per m.} = \frac{pLaN}{772}$$

Further, the brake H.P. is obtained by a suitable dynamometer, and the following statements are made:—

Gas used per I.H.P. hour.
Gas used per B.H.P. hour.
Mechanical efficiency.
Actual thermal efficiency.
Efficiency of a Carnot cycle between same limits of temperature.
Relative efficiency or comparison ratio.

Digitized by Google

The theoretical thermal efficiency of any gas engine may be found from the formula

$$\eta = 1 - \gamma \frac{t_r - t_e}{t_i - t_a}$$

where the suffixes stand for release, exhaust, ignition, and atmosphere respectively.

The expansion curve is $pV^{1.38} = C$, and the compression curve is $pV^{1.3} = C$.

Oil-Engine Trials.—The balance sheet is of exactly the same character as that of the gas engine. Taking the items separately.

(1) *Heat of combustion* due to oil per min. is found as before, being about 19,000 B.T.U. per lb. wt.; and the heat already in the air and oil must be obtained as follows:

(*a*) $\begin{matrix}\text{B.T.U. per m.}\\ \text{in air}\end{matrix} = \cdot 169\,(t - 32) \times \text{lbs. per m.}$

(*b*) $\begin{matrix}\text{B.T.U. per m.}\\ \text{in oil}\end{matrix} = \text{specific ht.} \times (t - 32) \times \text{lbs. per m.}$

The specific heat of petroleum averages ·45.

(2), (4), and (5). These quantities need no further explanation.

(3) *Heat discharged in exhaust pipe.* — The exhaust gases consist of CO_2 and air. In addition, however, on account of the large proportion of hydrogen in the oil, there is a considerable quantity of water formed, amounting to nearly half the weight of the gaseous products. The method of procedure is somewhat similar to what obtains on p. 938. Thus:

(*a*) Analyse the oil to find % C and H.

(*b*) Find the % volumetric composition of the exhaust gases, and transform at once into % weight composition (*see a*, p. 938).

(*c*) Find weight of CO_2 per lb. of oil, from

$$\begin{matrix}\%\text{ C}\\ \text{in oil}\end{matrix}(1\text{ lb. C} + 2{\cdot}66\text{ lbs. O}) = \begin{matrix}\%\text{ C}\\ \text{in oil}\end{matrix}(3{\cdot}66\text{ lbs } CO_2)\ldots\left(\begin{matrix}\text{p. 697,}\\ \text{line 23}\end{matrix}\right)$$

Digitized by Google

(*d*) Hence from (1*b*) find total weight of CO_2 per m., and by proportion from (*b*) the total weights of the other gases per m.

(*e*) As at (*d*) p. 938 find the total heat *per m.* given to the mixture of exhaust gases, between 32° and the exhaust temperature.

(*f*) Find weight of H_2O per lb. of oil, from

$$\underset{\text{in oil}}{\%\,H}\ (1\text{ lb. H} + 8\text{ lbs. O}) = \underset{\text{in oil}}{\%\,H}\ (9\text{ lbs. } H_2O)\ldots\left(\begin{matrix}\text{p. 697,}\\ \text{line 24}\end{matrix}\right)$$

and from (1*b*) deduce the total weight of water per minute.

Finally, the heat given to this water will be the sensible heat from 32° to 212°, the latent heat at atmospheric pressure, and the superheat from 212° to pyrometer temperature p°, or

$$\underset{\text{per m.}}{\text{lbs. of water}}\left\{\ S_h + 966 + (p° - 32)\cdot 48\ \right\}$$

The heat given to exhaust gases and water being added, constitute the quantity (3) on the right side of the balance sheet, and the results of the test may be stated as at bottom of p. 946.

Digitized by Google

APPENDIX IV.

(FIFTH EDITION.)

CHAPTER VII.

P. 324. **Pneumatic Hammer.**—This tool has been much improved since the description on p. 324 was first written, and is now used for general percussive work, such as caulking, chipping, and even riveting. The drawings in Figs. 891 and 892 are taken from Mr. E. C. Amos's paper before the Inst. Mech. Engineers in Feb. 1900, and illustrate a very satisfactory hammer. A is the working cylinder, B the piston hammer, D the tool, E the controlling valve, E_1 a steel seating for the same, F the handle, H the throttle-valve, I the throttle valve trigger, a_1 passage leading from e to the cylinder a, and always full of compressed air when throttle valve is open, a_2 passage from cylinder to top of valve chamber, a_3 passage from front end of cylinder to annular space e_3 in valve chamber, a_4 exhaust passage at rear end of cylinder leading to exhaust through valve interior, a_5 bye-pass from a_2 to cylinder, a_6 bye-pass from cylinder to a_7, a_7 exhaust passage from forward end of cylinder to atmosphere, e opening into valve bushing, e_1 opening into cylinder, e_3 annular groove in valve bushing, e_4 openings in valve E leading to exhaust e_6, e_5 central chamber of valve, e_6 exhaust to air.

Compressed air having been admitted at g_1 by pressing the trigger I, the fluid passes through e, and under the head of valve E, thus forcing the latter into the position shown in Fig. 891. The air can then pass into the cylinder through e_1, and thus moves piston B forward into the position shown in Fig. 892. The piston being reduced in diameter at b forms a chamber b_1, so that as the piston nears its forward limit of stroke, the air enters the chamber b_1 from the passage a_1, which is in direct communication with space e. At the same time the passage a_2 is opened to b_1, and thus the air passes back to the top of valve E, forcing it down into

Digitized by Google

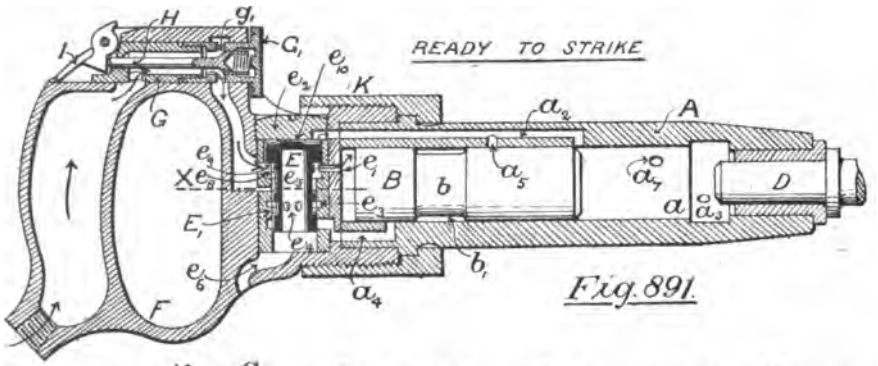

Fig. 891.

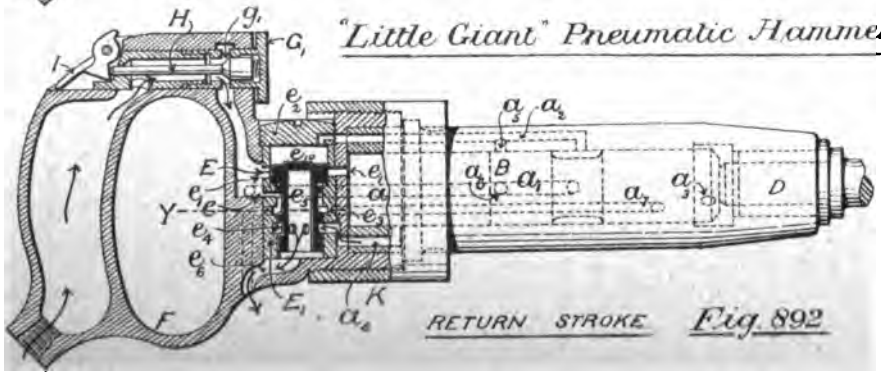

Fig. 892.

"Little Giant" Pneumatic Hammer.

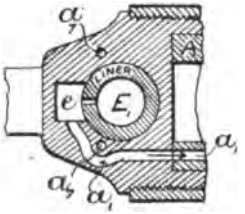

SECTION AT X.

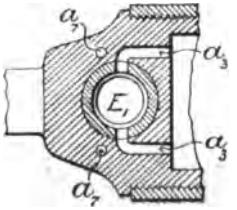

SECTION AT Y.

Digitized by Google

the position shown in Fig. 892. There is now a clear way for the air pressure through e, e_3, and a_3, for a_3 and e_3 are connected; and the return of the piston is thus secured. Coming now to the piston air exhaust, this escapes along the passage a_4 and through the openings e_4 and e_6, if the piston be moving leftward. When the piston moves to the right the exhaust air passes first through a_7 direct to the atmosphere; but when a_7 is passed, the escape occurs through a_3, e_3, e_4, and e_6, the valve E being up. The valve air must also be exhausted. During the leftward motion of the piston, and as b_1 is passing a_2, the air is permitted to escape from the top of valve E through a_2 and a_5 into b_1, then by a_6 and a_7 to the atmosphere. The pressure through e thus again lifts the valve. The downward movement of E is due to the total pressure on the area e_{10} being greater than that on the ring underneath the head. Reduction of shock is effected by cushioning, which in the piston is obtained by the closing of port a_4 before the end of the back stroke. In the valve a little air is imprisoned round the boss e_{10} which only slowly escapes through a_2 on the upward stroke. The portion e_8 of the valve is of a diameter nearly equal to the small bore of the valve bushing, and there is also a small circular groove at e_9. When the valve moves down, e_8 first enters the small bore of the valve chamber, and this tends to retard the passage of air through the bore, permitting the excess of air to act as a cushion.

Within certain limits the strength of the blow may be regulated by adjusting the amount of opening at the throttle valve H; this is produced by rotating the nut G, and thus screwing the seating to left or right. Other hammers are made that are called 'valveless,' because they dispense with valve E, and use the piston to uncover ports in the cylinder walls, but such hammers are not suitable for heavy chipping or riveting. The speed of valve hammers is about 1500 to 2000 blows per minute, while 'valveless' hammers vibrate at 10,000 to 20,000 strokes per minute, but with a lighter blow. The air pressure is about 60 lbs. to 80 lbs. per square inch, and it should also be mentioned that the 'Little Giant' hammer is made by the International Pneumatic Tool Company.

Digitized by Google

CHAPTER VIII.

P. 405. **Strength of a Suspension Link.**—Although the investigation on p. 405 has been retained as a convenient introduction to the theory of riveted joints, for which it is quite

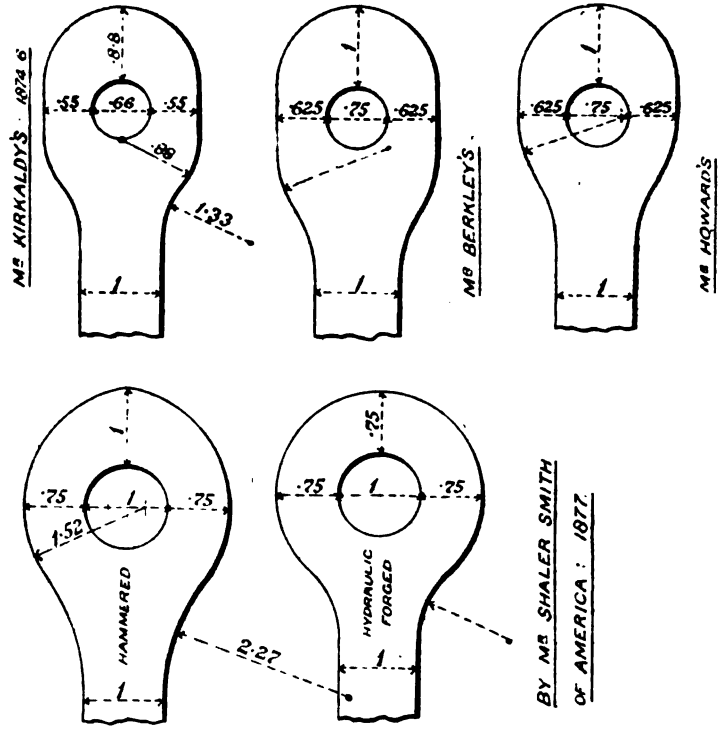

Forms of Suspension Links, as deduced from experiment.

Fig. 893.

reliable, the student must be warned that it does not meet the proportions of suspension links adopted in practice. At the same time, as a satisfactory theory, taking into account an uneven

Digitized by Google

condition of stress at *a c*, Fig. 355, has not been propounded, we are obliged to accept such forms as are the result of direct experiment. In Fig. 893 are shown six different forms of eye, all of which have been used on bridges, and all of which have been proved. In Mr. Shaler Smith's experiments the mode of manufacture was tested as well as the proportions, and therefore the results are probably the most reliable.

Pp. 443 and 850.

Example 68.—A beam is supported at two points one-quarter of its length from each end, and is loaded by three equal concentrated weights placed at the ends and the centre respectively; draw the diagram of bending moment.

The arrangement of the loads is shown in Fig. 894, and the diagram of B_m is to be drawn on the subtractive principle. Firstly, construct the trapezium A B C D, where E C or F D = $W \times \frac{1}{4}l$. This

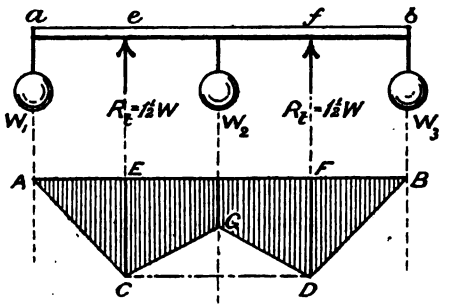

Beam Example. Fig. 894.

diagram shows the B_m which would be caused if W_1 and W_3 acted only, and the beam would be thereby curved upward. But W_2 will produce a reverse curvature on the beam between *e* and *f*, while not affecting the parts *a e* and *f b*. This moment, whose maximum is $\frac{W}{2} \times \frac{l}{4} = W \times \frac{1}{8}l$, or half that at E C, must be subtracted at every point between E and F, as shown at C G D, and the remaining shaded figure is the true diagram of bending moment.

P. 471. **Wind Pressure on Roofs.**—Some years ago Prof. Kernot, of Melbourne University, constructed a blowing machine giving a fairly steady jet of air about one square foot in sectional area, and to this he exposed numerous models of

Digitized by Google

buildings, afterwards measuring the wind pressure on the various surfaces. He found that the only cases in which the ordinary methods of calculation for wind pressure on roofs (p. 471) agree with practice are :—

1. A roof on columns, with free air space beneath.
2. A roof lying on the ground, viz., without raised supports.

The other cases taken were :—

3. A roof supported on walls rising as far as the eaves.
4. A roof on walls having parapets above the eaves.

In case 3, no pressure was experienced on the roof whatever, while in case 4 there was actually a negative pressure, causing a decided tendency to lift. These experiments, the results of which are published in Vols. V. and VI. of the Australasian Association for the Advancement of Science, are supported by our general experience of roofs injured by wind.

CHAPTER IX.

Pp. 484 and 520. **Mechanical Advantage and Velocity Ratio.**—Taking the symbols on p. 481, the *theoretical form of the principle of work*, viz., neglecting friction, is

$$P \times d = W \times D$$

But if P_1 is the practical effort required, including frictional effect, the *practical form of the principle of work* becomes

$$P_1 \times d = W \times D$$

and therefore the *efficiency of the machine*

$$= \frac{P}{P_1} = \eta \text{ say.}$$

Now *Theoretical mechanical advantage* (T M A) $= \frac{W}{P}$; and *Practical mechanical advantage* (P M A) $= \frac{W}{P_1}$; and *velocity ratio* $= \frac{d}{D}$ which is numerically equal to T M A.

$$\therefore \text{P M A} = \frac{W}{P_1} = \frac{W}{P} \times \frac{P}{P_1} = \frac{d}{D} \eta$$

$$= \text{velocity ratio} \times \eta$$

Digitized by Google

Suppose then a machine has a velocity ratio of 4 : 1, and an efficiency of 30 °/₀, its real mechanical advantage would be

$$\frac{4 \times 30}{1 \times 100} = \underline{1{\cdot}2 : 1}$$

Referring to examples 42, p. 484, let us assume an efficiency of 60 °/₀. Then

$$\text{P M A} = \text{V R} \times \eta = \frac{W}{P_1} = \frac{1120}{60}$$

$$\therefore \text{V R} = \frac{1120 \times 100}{60 \times 60} = \frac{\text{follower}}{\text{driver}} \times \frac{15}{5}$$

$$\text{and} \quad \frac{\text{follower}}{\text{driver}} = \frac{1120 \times 100 \times 5}{60 \times 60 \times 15} = \frac{10{\cdot}37}{1}$$

So, in actual practice, the pitch line diameters may be 3" and 31·2" for pinion and wheel respectively.

Example 43 needs no correction, because this is a question of positive speed merely.

In example 44 let us again assume an efficiency of 60°/₀. Now T M A = 16 : 1 = V R

$$\therefore \text{P M A} = 16 \times {\cdot}6 = 9{\cdot}6 : 1$$

$$\text{and } W_1 = 9{\cdot}6 \times 120 = \underline{1150 \text{ lbs.}}$$

If the Weston block has an efficiency of 35 °/₀ (see p. 577) we have

$$\text{P M A} = 20 \times {\cdot}35 = 7 : 1$$

$$\therefore W_1 = 7 \times 50 = \underline{350 \text{ lbs.}}$$

In like manner the real pull on the handle in the screw jack, p. 520, with an efficiency of 60 °/₀ for the worm and 35 °/₀ for the screw, or a total of ·6 × ·35 = ·21 would be

$$P_1 = 20 \div {\cdot}21 = \underline{95 \text{ lbs.}}$$

which means that 10 tons could not be raised conveniently.

Pp. 574 and 873. **Efficiency Curves.**—Whenever experiments are made upon machines in order to discover their frictional loss and efficiency under all loads, the full set of curves shewn in Fig. 895 ought to be plotted, to a load base. The equations to

Digitized by Google

every curve ought next to be found, so that the numerical results for a particular load could at any time be given.

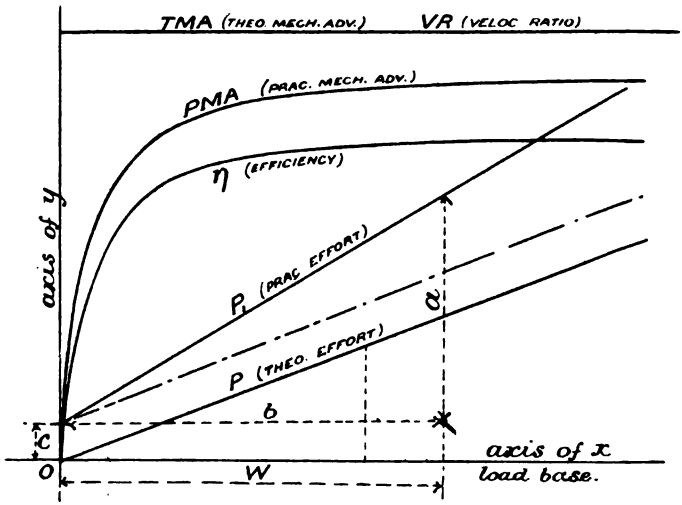

Efficiency Curves. *Fig. 895.*

Line P is of the form $y = m\,x$, thus

$$P = \frac{1}{VR} \times W$$

Line P_1 is of the form $y_1 = m_1 x_1 + c$, or

$$P_1 = \frac{a}{b} W + c$$

Nextly, $$\eta = \frac{P}{P_1} = \frac{W}{VR\left(\frac{a}{b}W + c\right)}$$

But the construction of the machine will give us the velocity ratio, being $d \div D$, so

$$TMA \text{ or } VR = \text{a constant.}$$

And finally,

$$\therefore\ PMA = VR \times \eta = \frac{W}{\left(\frac{a}{b}W + c\right)}$$

In an engine, whether actuated by steam or gas, P would

Digitized by Google

represent the brake H.P., and P_1 the indicated H.P. These lines would be much more nearly parallel than in other machines, viz., the frictional loss would vary little from light up to full load. The efficiency curve would have the same general character, and the whole would be drawn to a base of load (B. H. P.).

P. 494. Whitworth's Quick-return Motion.

Example 69. Let two pieces move about fixed parallel axes in rubbing contact. Given the angular velocity of one of them, find that of the other: also the normal velocity, and the velocity of sliding at the point of contact. (Hons. Applied Mechanics Exam., 1897.)

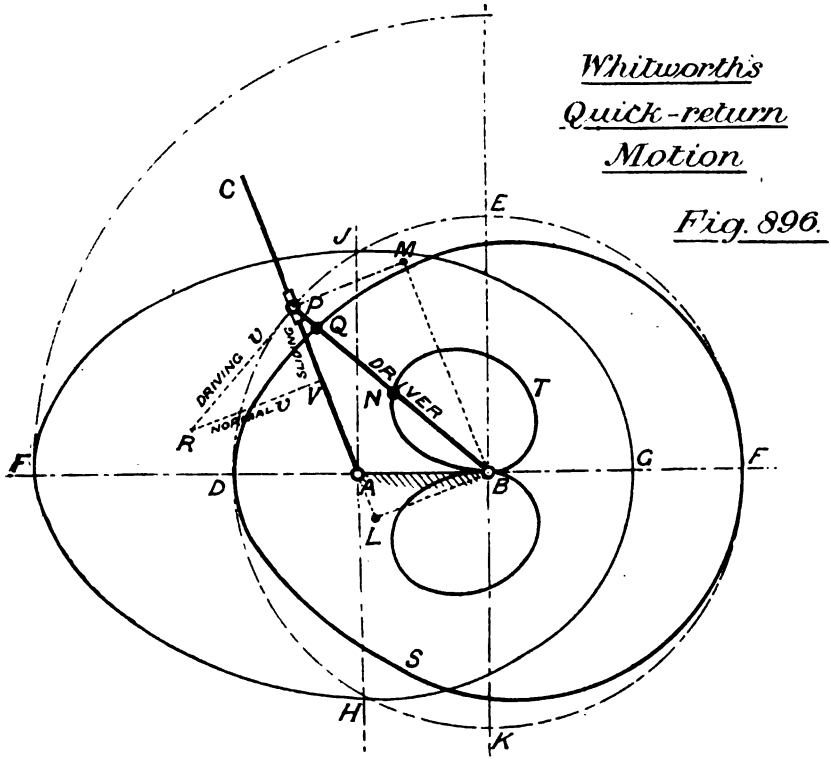

The first part of this question is answered by the construction shewn in Fig. 457, *p.* 493. The normal and sliding velocities of the slider are further shewn in Fig. 896. Referring to the latter figure,

Digitized by Google

A B is the fixed link, B P the driver travelling uniformly say, and A C is the driven link having a varying angular velocity. Following the method of *p.* 493, and considering B as the diagram centre, B P = velocity of driver at any point, and D E F K is a polar curve showing ω of driver. Also G H F J is a polar curve showing ω of A C by its radii vector.

Proceeding, let B P = linear velocity of P, and complete the parallelogram L P M B. Then with centre B, turn L round to N, and M to Q. Doing this for various positions, we have constructed the polar curve D Q F S, shewing linear *velocity of slider* P *normal to* A C. Similarly the polar curve B N T shews linear *velocity of slider* P *sliding along* A C. For proof, P R V is a triangle of velocities, drawn (1) right angles to P B, (2) right angles to A C, (3) parallel to A C, and it is easily seen that triangle B P L is similar.

P. 553. **Electric Accumulators or Secondary Batteries.**—The Planté and Faure cells have already been generally described. Both kinds of cells are still used, the E.P.S. being a Faure cell, and the Epstein a Planté cell, while the Chloride Co. claim to unite the advantages of both types. In the Faure cell the plates are lead grids, whose holes are filled with paste made as follows:—

Positive plate: red lead (Pb_3O_4) mixed with dilute sulphuric acid.

Negative plate: litharge (PbO) mixed with dilute sulphuric acid.

(Note: Comparing with a primary battery, the + is equivalent to zinc and the — to copper)

The probable condition in the Planté battery is:

	+ Plate	Electrolyte	− Plate
When charging ...	PbO_2	+ 2 H_2SO_4 +	PbO.
When discharging ...	$PbSO_4$	+ 2 H_2O +	$PbSO_4$.

While in the Faure cell the reaction may be:

+ Plate, charging: $PbSO_4 + 2\,H_2O + SO_4 = PbO_4 + 2\,H_2SO_4$

− Plate, charging: $PbSO_4 + H_2 = Pb + H_2SO_4$

+ Plate, discharging: $PbO_2 + 2\,H_2SO_4 + H_2 = PbSO_4 + 2\,H_2O$

− Plate, discharging: $Pb + SO = PbSO$

Fig. 897 shews diagrammatically the arrangement of the plates in a two-cell battery. The electrolyte or conducting liquid

Digitized by Google

between the plates is made up of 4 parts of sulphuric acid, having a specific gravity of 1·84, to 21 parts of distilled water, both by measure, the acid being slowly added to the water and the mixture allowed to cool.

Now, there are three kinds of winding in continuous current dynamos: (1) series wound, where the full armature current is

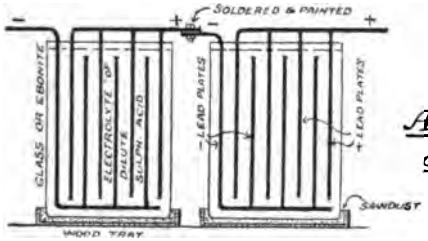

Electric Accumulators
OR SECONDARY BATTERIES.
Fig. 897

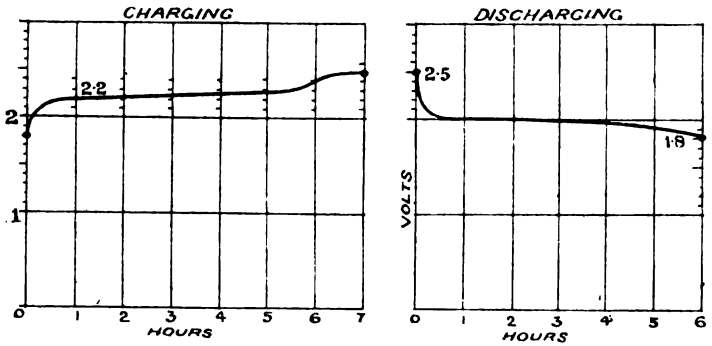

carried round the magnets to excite them, and then to the mains, all in 'series;' (2) shunt wound, where a portion only of the armature current is used to excite the magnets, carried in a small bye-pass wire or shunt; (3) compound wound, where both methods are adopted simultaneously. The shunt-wound dynamo is alone suitable for charging accumulators, except the excitation be caused by a separate small dynamo. When all is ready, the dynamo is run up to speed till the volts are properly adjusted, and only then is the circuit closed with the cells. The charging current should not exceed ·026 ampères per square inch of plate surface, and there should be a constant pressure whose volts =

Digitized by Google

2·75 × number of cells. The time of charging must be 12 hours when the cells are first filled, and may even be 30 or 40 with some makes of cells. Plates are of various sizes and areas, so that the charging rate may vary from 4 up to 15 ampères per plate. As soon as the cells are fully charged, the circuit is to be broken first, and the engine slowed down afterwards. Diagrams showing variation of voltage during charge and discharge are shewn in Fig. 897, from which it will be seen that in charging the voltage gradually rises from 1·9 to 2·4, while at the same time the specific gravity of the liquid increases from 1·17 to 1·2, which is a further test of charge completion. If the charge is carried far enough, small gas bubbles fill the cell as they rise to the surface, and this effect is called 'milking.' Cells refusing to milk must be removed and examined. In discharging, the E.M.F. falls rapidly at first to 2 volts, and then gradually to 1·9 volts, after which no more current must be taken, there being only one-quarter of the original energy now left.

The charging and discharging times should be approximately equal, for although rapid discharge does sometimes take place, the plates not only deteriorate thereby, but a lower efficiency is maintained, due to heat losses caused by resistance. Also the most economical charging rate is one-half of the maximum allowable. It is important that the battery should be kept as fully charged as convenient—up to milky at least once per week. The discharge must never be complete, nor must the battery remain idle for any length of time, especially when low in charge; neither must the normal rates of charge and discharge be exceeded. The liquid may be replenished with pure water as it evaporates.

The *capacity* of the battery is measured in

$$\text{Ampère hours} = \left\{\begin{matrix}\text{average discharge,}\\ \text{ampères}\end{matrix}\right\} \times \left\{\begin{matrix}\text{total hours of}\\ \text{discharge}\end{matrix}\right.$$

And also in

$$\text{Watt hours} = \left\{\begin{matrix}\text{average}\\ \text{volts}\end{matrix}\right\} \times \left\{\begin{matrix}\text{average}\\ \text{ampères}\end{matrix}\right\} \times \left\{\begin{matrix}\text{total hours of}\\ \text{discharge}\end{matrix}\right.$$

Which may also be given in

$$\text{H.P. hours} = \frac{\text{Watt hours}}{746}$$

Digitized by Google

Capacities vary considerably, from 30 up to 600 ampères per cell, according to the number of plates and their size.

$$\text{Current efficiency} = \frac{\text{discharge ampère hours}}{\text{charge ampère hours}} = 80\% \text{ to } 90\%$$

$$\text{Energy efficiency} = \frac{\text{discharge Watt hours}}{\text{charge Watt hours}} = 60\% \text{ to } 70\%$$

Both these depend on rates of discharge, the lower figure for a rapid, and the higher for a slow rate.

Over-discharging, or too strong an acid, may either of them cause *sulphating* of the plate, the second fault being remedied by the addition of a small quantity of carbonate of soda. Buckling of the plate is caused by variable action, excessive rates, or by sulphating; and disintegration results both from sulphating and buckling.

For electric lighting, the

$$\text{No. of cells} = \frac{\text{E M F of lamps}}{2} + 2 \text{ or } 3$$

For traction, accumulators rapidly deteriorate through vibration or excessive rates (*see next paragraph*).

P. 554. **Electric Traction.**—There are four methods now in vogue for carrying the current from main to car motors:

1. Overhead line, with small trolley.
2. Conduit, with slot rail.
3. Surface contact, with live studs.
4. Accumulators on the cars.

The overhead or trolley system is by far the cheapest, and, being very little objectionable, is now most used. The main is buried in the ground, and the live wires, one for the up and one for the down line, are carried on suitable posts and brackets, being connected to the main through the hollows in the posts. The current is taken to the motor from the overhead trolley through a 'fishing rod' (*p.* 554), and the return is by way of the rail, whose several parts are connected by 'bonds' at the fish-plates.

The conduit system is so very expensive that it has only been adopted in a few cases, being mainly experimental lines. The

Digitized by Google

current is taken directly from the main in the conduit, and returned by the side rails (*see p.* 554).

In the surface-contact system, studs are laid along the track centre at short intervals, and these are only made 'live' when a contact piece on the under-side of the car passes over them.

Accumulators are, as already stated, excessively heavy as yet, though there are signs of a possible reduction of weight. They cannot compare with the trolley system as regards first cost, while the expenses of repair and renewal are very great. The great advantage of the system is the separation of the cars, so that a defection of one car cannot interfere with the rest of the system. For motor cars they produce a completely vibrationless mode of driving which is remarkably pleasant, but the cell-load makes a larger proportion of the total than in full-sized tramcars. Thus in the electric cabs, the cells weighed 14 cwt. and the car 11 cwt., while the people would not exceed 5 cwt. In large cars, on the other hand, while half the load is due to the car, the other half is equally divided between the passengers and the battery.

The working expenses per mile are, with horse cars, 10·7*d.*, with steam cars 10·3*d.*, or about the same, and with electric cars on the trolley system 4·8*d.*

P. 580. **Frictional Loss in Engines.**—Another way of measuring this loss is to find the revs. per m. of engine at moment of shutting off steam, and ascertain energy of rotation, $Wv^2 \div 2g$, of flywheel or any further pulleys = E, say. Then

E ÷ no. of turns before stopping dead

= energy absorbed by friction of the unloaded engine per turn.

Also $\frac{E}{\text{turns}} \times N$ = work absorbed per m. when running.

And $\frac{E\,N}{T \times 33{,}000}$ = H.P. lost in friction.

Then as before

I.H.P. at any load − H.P. lost = B.H.P.

This is only true on the assumption that in engines the lines P and P_1 of Fig. 895 (B.H.P. and I.H.P. respectively) are nearly parallel, which is a fairly correct assumption.

Digitized by Google

CHAPTER X.

P. 700. **Electric Ignition for Gas and Oil Engines.**—The advent of the motor car has brought electric firing into great prominence, so much as to seriously threaten tube ignition for all types of engines. At the present time three systems of obtaining the electric spark are practically used: (1) the primary or storage battery, whose current pressure is intensified by means of an induction coil, (2) a magneto-electric machine giving a current of low pressure, (3) a small dynamo also producing a low-pressure current.

The first of these systems may be illustrated by Fig. 898, which shews the wiring adopted in the De Dion motors. Taking the parts in order we have, A the battery, B the primary wires, in circuit with the inner or primary winding P, J the induction coil whose secondary winding S is coupled to the firing plug, the current passing through the wire W and returning by the frame E of the engine, and finally the make and break hammer M, also in circuit with the primary winding. The battery consists either of four Leclanché dry cells giving about 6 volts at 3 to 10 ampères, or of two to three storage cells of 2 volts each. The induction coil consists of two windings, primary and secondary, as mentioned, a soft iron core Q, and a condenser C made of layers of tinfoil and waxed paper. The plug G being in place, the switch S is closed and the engine shaft turned round, causing the cam H to rotate also, which permits the hammer D to make and break contact at the proper time, thus enabling the cell current to pass through the induction coil, with the result that a secondary current of great intensity but low ampèrage is created in the wire W, and the spark passes at K, igniting the mixture in the cylinder. The ebonite block L may be altered by a rod, as shewn dotted, so as to change the firing position as regards the engine stroke, and thus constitutes a hand governor of great convenience, producing various degrees of speed and power. The firing plug is shewn at N to a larger scale, the wire and rod W W being insulated by porcelain, and in some cases mica. The De Dion engine rotating at 1500 revolutions per minute does not permit of the attachment of a trembling hammer to the induction coil, so the spark is produced

Digitized by Google

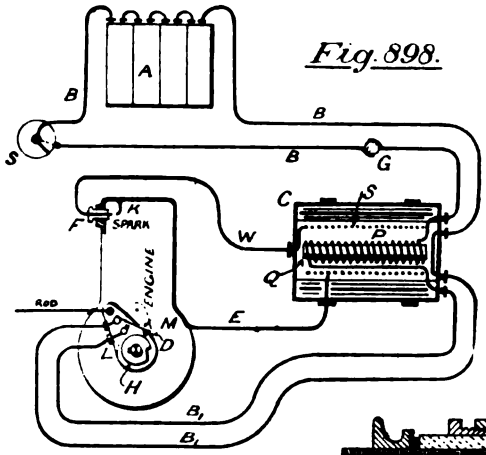

Fig. 898.

PRIMARY
DRY CELL
(LECLANCHÉ)

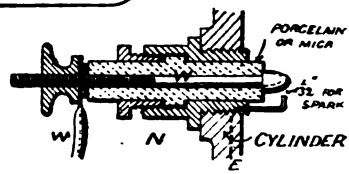

FIRING PLUG

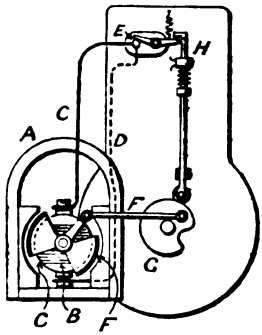

Methods of Electric Ignition.

Fig. 899.

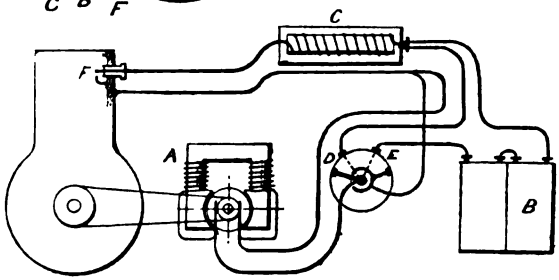

Fig. 900.

Digitized by Google

instantaneously in one flash. In other engines, like the Benz, having but 800 revs. per m. or thereabouts, a trembling hammer on the coil causes a spark of longer duration.

The magneto-machine is represented by the Sims-Bosch gear shewn in Fig. 899. A is a permanent magnet of some strength, and B a fixed armature wound lengthwise with a wire C making circuit with the sparking plug E partly directly and partly through the engine frame D. F is a soft iron shield which is caused to rock on the armature centre by means of the connecting rod F coupled to a cam disc G on the engine shaft. As the cam rotates, it allows the tappet H to lower at the proper time and raise the trip lever J, thus breaking the armature circuit and causing the spark to pass at E within the cylinder. It is well known that the disturbance of a magnet's field will cause difference of potential in a circuit between its poles, and such disturbance is actually produced by the rocking of the soft iron shield.

Fig. 900 shows the method of connecting up a small shunt-wound dynamo A, which is driven from the engine shaft. As the current cannot flow till the engine is running, the latter must be started by means of the secondary battery B, which is provided with a primary coil C having large self-induction; but as soon as the dynamo becomes excited by the engine it is switched in circuit with the coil and firing plug, while the accumulators are fed in parallel by a portion of the dynamo current, so that the cells are kept constantly charged. Thus by closing switch E, we connect the battery B, coil C, and firing plug; and when ready the dynamo is coupled by switch D, sending some of its current by C and F, and the overflow through B. When the cells are fully charged, E may be opened.

CHAPTER XI.

P. 715. Friction in Pipes.

Example 70. Find (1) the head necessary to produce a flow of 3 ft. per sec. in a pipe 6″ diameter and 1 mile long, the coefficient of friction being ·01 ; and (2) the velocity of discharge of water through

Digitized by Google

a pipe 1 mile long, 6″ diameter, with 60 ft. of head, and the same coefficient.

Case I. Head lost in friction $= 4\mu \frac{L}{D} \cdot \frac{v_2}{2g}$

$$= \frac{4 \times \cdot 01 \times 5280 \times 9}{\cdot 5 \times 64} = 59 \cdot 7 \text{ ft.}$$

$$\text{Velocity head} = \frac{v^2}{2g} = \frac{9}{64} = \cdot 14 \text{ ft.}$$

$$\therefore \underline{\text{Total head}} = 59 \cdot 7 + \cdot 14 = \underline{59 \cdot 84 \text{ ft.}}$$

Case II. Total head = head lost in friction + velocity head

$$= \left(4 \times \cdot 01 \times \frac{5280}{\cdot 5} \times \frac{v^2}{64}\right) + \frac{v^2}{64} = 60$$

$$423 \cdot 4\, v^2 = 3840 \qquad \underline{\text{and } v = 3' \text{ per second.}}$$

P. 769. **Thermal Efficiencies.**—Comparing with steam engines giving 14% to 20% efficiency between work done and heat in the steam used, the Pulsometer (*p.* 734) shews very badly, for taking as it does 800 lbs. of steam per H.P. per hour, the efficiency is but $\frac{1}{4}$ of 1%. With the 'Grel' attachment this is doubled, and becomes $\frac{1}{2}$ of 1%. Low though this is, the Steam-jet Pump or Water Lifter, a kind of lifting injector, records a still lower effect, for 2000 lbs. of steam per H.P. hour are expended, giving an efficiency of $\frac{1}{10}$ of 1%. Nevertheless, both these contrivances have very convenient uses.

P. 894. **Parsons' Steam Turbine.**—It appears that difficulties with regard to patent rights was the reason for the tempo

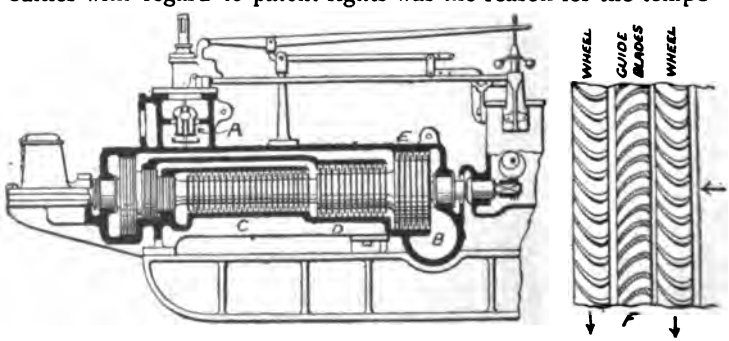

Parsons' Parallel-flow Steam Turbine.
Fig. 901.

Digitized by Google

rary abandonment of the axial-flow turbine, and the substitution therefor the outward-and-inward-flow turbine shown in Fig. 856. Parallel-flow has since been returned to, and indeed the engines of the famous *Turbinia*, of 2100 H.P., are of this type, both forms being now manufactured. Fig. 901 illustrates the parallel-flow type, and is easily understood. Steam enters by the valve, and traverses each of the chambers, C, D, and E in succession, the final exhaust taking place at B; and an enlarged diagram at F shews the form of the blades in both wheel and fixed cylinder.

P. 898. **Balancing of Locomotives.**—Prof. Kernot, of Melbourne University, writes that he has got excellent results in the case of nearly one hundred locomotives, by first balancing the revolving parts perfectly, and next balancing $\frac{3}{4}$ of the reciprocating weights, *dividing the latter equally among all the coupled wheels*, so as to distribute the 'hammer blow' on the rail and make it harmless. The engines treated were mostly six-coupled inside cylinders of English type.

Digitized by Google

Digitized by Google

INDEX.

PAGE

ABSOLUTE zero of temperature 589
Absorption dynamometer 575, 875
Accelerated velocity . . . 473
Acceleration 473
——— curves, and scale . 492, 863
——— of piston 932
Accumulator, hydraulic, *see* Hydraulic accumulator.
——— pump 732
Accumulators, electric . . . 958
Action, arc of 514
——— of cutting tools. . . 140
Adamson's seam 332
Addendum of tooth . . . 514
Adhesion of locomotives . . 571
Adiabatic curve, plotting . . 882
——— expansion, comparison of temperatures in . . . 607
——— exponent . . . 605
———, saturated steam . . 766
Adiabatics, isothermals and . 605, 607
Adjustable hanger, automatically . 504
Adjustment of stroke in hydraulic pressure engine, automatic . 742
Admiralty test requirements . . 388
Admission, effect on indicator diagram of late 618
Advance of eccentric, angular . 637
Advantage, mechanical, *see* Mechanical advantage.
———— of machine tools . 288
Advantages and disadvantages of various methods of transmitting power 577
——— of remelting cast iron 2, 42
——— of single and multiple stage expansion 621
Agents, comparison of horse power of different 480
Air-compression cylinder . . 546
——— efficiency 880
——— systems 881
Air pump for jet condenser . . 686
— —— for surface condenser . 688
Air vessel, casting and moulding . 27
— —— on pump, use of . . 730
Allan's link motion . . . 642
Allotropic forms of carbon . . 72
Allowance for machining . 49, 215

PAGE

Alternative fulcra on testing machine 375
Aluminium bronze . . . 801
——— processes 800
Analysis of feed 901
Angle bar cutting machine . . 290
—— of cutting tools . . 139, 141
—— of friction 561
—— of obliquity 512
Angle of resistance, limiting . 560
—— of tooth of mill . . . 177
—— of torsion 424
Angles, re-entrant . . . 67
Angular advance of eccentric . 637
——— velocity-ratio . . . 863
Annealing malleable castings . 36
Annular or internal wheels . . 514
Anti-friction or Schiele's pivot . 560
—— ——— rollers . . . 489
Appearance of fracture. . . 77
Appold's brake 875
Approach and recess, teeth . . 763
———, arc of 512
Approximate method of finding moment of resistance . . 433
Arc of action 514
— of approach, contact, and recess 512
Arcs, tooling 819
Area, centroid of. . . . 845
—— of steam port . . . 681
——, virtual stress . . . 430
Areas of expansion curves . . 604
Armour plates 798
Arrangement of lathe driving . 153
——— of machine shop . . 501
——— of mould 46
Artificial draught . . . 907
Atkinson's gas engine . . . 912
Augmentation of chains . . 489
Autographic test diagrams . . 384
Automatic cut-off in hydraulic crane cylinders. . . . 741
——— cut-off, variable expansion by 654–6
——— expansion gear . . . 654
——— lifting injector . . . 696
——— stroke adjustment in hydraulic engine 744
Automatically adjustable hanger . 504

Digitized by Google

PAGE
Available energy 476
Average stresses . . . 393, 840
Axle, wheel and 481
——, compound wheel and . . 483

BABCOCK-WILCOX boiler 339, 830
Back gear of lathe . . . 142
Backed-off mills 175
Backlash of teeth 514
Balance for lift, hydraulic . 740
Balanced cores 57
——— lift 738
Balance sheets . 937, 941, 944, 947
Balancing 897
——— locomotives . . . 967
Ball bearings . . . 568, 872
Balls, turning 820
Ball-turning rest 753
Band sawing machine . . . 294
Bar, composition of puddled . 76
——, rolling of steel . . . 280
Bases for velocity curves, time and distance 491
Basic steel 791
Bauschinger's experiments . . 840
Beader, tube 326
Beam blowing engine . . . 628
—— example 953
——, momental strength of cast iron 434
—— engine, compound . . 628
—— ——, Cornish pumping . 627
—— ——, rotative . . . 628
—— ——, velocity curve for . 496
——, momental strength of wrought iron rolled 434
Beams, bending moment of, *see* Bending moment.
——, continuous . . . 762, 850
——, deflection of . . 450, 855
——, fixed 848
——, moment of resistance of . 428
——, neutral axis of . . . 427
—— of uniform strength . . 452
——, pressure on supports of continuous 445
——, resilience of . . . 451
——, table of deflection of . . 451
——, theory of 427
Bearing, friction of collar . . 558
———, machining crank shaft . 235
———, friction of journal . . 557
———, thrust . . . 506, 688
Bearings 504
———, ball 568
———, footstep thrust and collar 506
PAGE
Bearings, tumbler . . . 509
Beck gas engine 912
Bedplate of engine, machining . 264
Bell-crank lever, forging a . . 118
Belleville boiler 831
Belt driving; problems in, and pulleys for 534
—— fastenings 532
—— gearing . . . 526, 579
Belting, chain 532
———, quick return by . . 534
Belts; creep, slip, speed and length of, centrifugal tension in . . 530
——, details of 531
——, direction of advancing and retreating sides of . . . 532
——, driving pull, horse power and strength of 529
——, tension of . . . 527, 867
Bender, hydraulic plate . . 298
Bending and compression, combined action 455
——— and tension, combined action 453
——— and torsion, combined action 461, 859
——— coefficient . . . 436
——— coefficient for rectangular sections, table of . . . 436
——— moment and shearing force diagram, combined . . . 444
——— moment and vertical shear 437
——— ———, equivalent . . 461
——— ——— for beam fixed one end, supported at other, loaded with own weight . . . 443
——— moment for beam, fixed both ends, loaded centrally . . 441
——— moment for beam, fixed both ends, load uniformly distributed 442
——— moment for cantilever, concentrated load 438
——— moment for cantilever, uniformly distributed load . . 439
——— moment for girder, concentrated load at centre, supported both ends 439
——— moment for girder, load at any point, supported both ends . 440
——— moment for girder, load uniformly distributed, supported both ends 440
——— moment, graphically . 853
——— ———, least . . . 760
——— ———, ship's . . . 854
——— rolls, plate . . . 294

Digitized by Google

PAGE
Bending stress action . . . 426
——— theories 437
Bent crank, forging a . . . 122
Bessemer steel plant . . . 79
Best ratio of expansion . . 772
Bevel gearing . . . 519, 578
—— pinion, making pattern of . 60
—— tooth cutting . . . 823
—— wheel moulding . . . 34
—— —— teeth 520
—— —— —— cutting . . 753
Black wash 8
Blackening, object and composition of 6
Blast furnace . . 2, 73, 788
—— ——— charge . . . 789
——, smith's 90
Block and tackle 482
Blooms 76
Blower, Roots' 90
Board of Trade rule for furnace tubes 460
Boiler, Babcock-Wilcox . 339, 830
——, Belleville 831
—— covering 902
——, De Naeger 832
——, drilling and riveting a locomotive 353
——, Du Temple . . . 832
—— efficiency . . . 768, 939
—— explosions 899
——, Field 828
—— fittings . . . 693, 903
—— flue drilling machine . . 307
—— H.P. 931
—— incrustation . . . 901
——, Lagrafel D'Allest . . 832
—— maker, geometry required by 339
—— maker's tools . . 283–286
—— making and plate work . 279
—— manhole and mudhole . 332
——, setting of Lancashire . . 827
——, setting out a locomotive . 352
——, setting out a marine . . 342
——, setting out and riveting a Lancashire 354
—— smith's tools . . . 284
—— stay tubes 351
—— stays, girder . . 335, 348
—— ——, gusset and longitudinal 330
—— ——, palm 335
—— ——, screwed . . 335, 350
——, Thornycroft . . . 832
—— trials 936
——, Yarrow 832

PAGE
Boilers, Adamson's seam and Galloway tubes for flues of; corrugated flues for 332
——, care of 899
——, Cornish and Lancashire 330, 354
——, defects in 899
——, grooving in 900
——, headers for tubulous . . 339
——, locomotive 335
——, marine 333
——, multitubular . . . 335
——, Niclausse 830
——, riveting of . . 334, 348, 353
——, setting out and riveting tubulous and vertical . . . 356
——, strength of flat surfaces in . 451
——, tubulous or water-tube 337, 356, 828
——, vertical . . . 337, 356
Boiling point . . . 593, 594
Bolt, forging a 102
Bolts, diameter and area at thread-bottom of 402
——, pitch of cylinder cover . 402
——, resilience of . . . 834
——, strength of 402, 403, 415, 422, 842
Boring bar 162
——— crosshead 752
——— eccentric strap . . . 751
——— machine, horizontal . . 160
——— machines, classification . 808
Bottle jack 205
Bourdon pressure and vacuum gauges 694
Brace, ratchet 202
Braced or framed structures . . 463
Bracket for governor, machining . 249
Brackets, shaft, hanger, automatically adjustable hanger, wall box, and wall bracket . . . 505
Brake, Appold's 875
—— dynamometer and horse power 575
—— straps 569
—— trials 556
——, wagon 498
Brands of plate iron . . . 282
Brass, composition of . . . 84
—— founding . . . 37, 747
Brass-work, finishing . . . 264
Brasses, machining . . . 752
Brazing 86
Break lathe with treble gear . 157, 159
Breaker, stone 498
Breaking stresses 392
——— ——— of materials, average 394

Digitized by Google

PAGE

Breaking stresses of materials, table of 393
Breast water wheel 720
Bridge, stresses in chain of suspension 466
British thermal unit . . 479, 585
Bronze, silica 799
Bronzes, Al and Mn . . . 801
———, phosphor and manganese 85, 748
Brotherhood's three-cylinder engine 631
Brotherhood-Hastie hydraulic engine 742
Brumbo pulley 616
Buckets for water wheels, ventilated 720
Bushes 506
Butt joints, double riveted . . 410
—— —— —— ——, with two cover-plates 411
—— —— treble riveted . . 411

CABLE grip 543
Calcining ore . . . 788
Calculation of centre of gravity . 432
———— of weight of fly-wheel . 679
———— of work and horse power from theoretical indicator diagram 625
Calculus, graphical 857
Caloric or material theory of heat . 581
Calorific value of fuel . . 697, 906
Calorimeter for fuel . . . 906
———— for steam . . . 878
Cam for automatic stroke adjustment in hydraulic engine . . 745
Cantilever 427
Capstan, geared 523
——— head for lathe . . . 200
Carbon, allotropic forms of . . 72
——— in cast iron . . . 789
——— in steel 793
——— in W I. 793
Care of boilers 899
Carnot cycle 887
Case-hardening . . . 124, 748
Cast iron, carbon in . . . 789
—— ——, composition of . . 2
—— ——, crystallisation of . . 67
—— —— cylinders, water core . 760
—— ——, effect of elements . 789
—— ——, manganese in . . 789
—— ——, phosphorus in . . 789
—— ——, pig, white, mottled, grey and commercial varieties of . 1
—— ——, properties of . . 73
—— ——, remelting . . 42, 779

PAGE

Cast iron, silicon in . . . 789
—— ——, sulphur in . . . 789
—— ——, toughening . . . 3
Casting and moulding . . . 1
———— ———— air vessel, condensers and cone pulley . . . 27
———— ———— cattle trough . 6
———— ———— chain pulley . . 8
———— ———— cylinder cover, hand wheel, worm wheel, and drilling machine table . . 10
———— ———— fly-wheel and screw propeller 25
———— ———— gas pipe main . 14
———— ———— large steam cylinder 21
———— ———— pipe bend . . 17
———— ———— plummer block . 31
———— ———— road wheel . . 12
———— ———— stop valve . . 31
———— design, pattern-making and 43
———— of wrought iron. . . 87
———— on 12
———— rule for steam cylinders . 400
————, softening a . . . 36
Castings, chilled 34
————, contraction of . . . 62
————, ————, table of . . 63
————, annealing malleable. . 36
————, steel . . . 42, 747
————, warping and shrinking of. 69
Catenary curve . . . 466, 867
Cattle trough, casting and moulding 6
Caulking and riveting . . 286, 826
————, pneumatic . . . 322
Cement testing machine . . 370
Cementation process and furnace . 78
Central stations 875
Centre, instantaneous or virtual . 490
—— of gravity found mechanically and graphically . . 431–2, 845
—— of gravity found by calculation 432
Centre-grinding wheel . . . 807
Centreing lathe 749
——— machines . . . 152, 807
——— square 150
——— work in lathe . . . 151
Centres for milling machine, dividing 181
——— of lathes 806
Centrifugal force, tensile stress caused by 400
——— pump, and path of water in 728
——— tension in belts . . 530
Centrode 490
Centroid of area 845
Chain and force closure . . 487
—— barrel, building pattern in loam 65

Digitized by Google

PAGE

Chain belting 532
——, double slider crank, and quadric crank . . . 487, 763
—— gearing, pitch . . 544, 579
——, lever-crank . . . 763
——, parallel-crank . . . 763
—— pulley, casting and moulding 9
——, slider crank . . . 486
——, strength of 397
—— for suspension bridge, stress on 466
Chains, augmentation of . . 489
——, closed 487
——, kinematic . . . 486, 489
Change wheels of lathe . . 147, 484
Chaplets 17
Charge, blast-furnace . . . 789
Charging of cupola . . . 2
Charles' and Boyle's laws, combination of 590
Charles' law 587
Chasers 213
Chemical combination and mechanical mixture 72
Chill in chilled castings, depth of 34
—— moulding 35
Chilled castings 34
Chills 36
Chip ing 209
Chisels 187
——, tempering 126
Chrome steel 798
Chuck, dog 149
———, drill, independent, lever, and universal scroll . . . 153
———, eccentric 155
———, Whiton's . . . 152
Circle, pitch and rolling . . 510
Circular arcs, tooling . . 819
Circulating pump for surface condenser 688
Classification of stress action . 394
Claw clutch 503
Clearance, effect on indicator diagram of 618
——— in cylinder . . . 616
——— of teeth 514
Clement's driver 749
Clerk's gas engine . . . 911
Clip pulley, Fowler's . . . 540
Closure, chain and force . . 487
Clutch, claw 503
——, Musgrave's, and Weston's . 569
Coal, constitution and calorific value of 697

PAGE

Coal per I.H.P. 768
Cocks, cylinder 264
Coefficient of friction in tension elements 528
——— of static friction . . 555
——— of velocity of water through orifices 712–13
Coefficients, table of bending . 436
——— of contraction, discharge, and resistance, of water through orifices 712–13
——— of linear expansion . . 369
Cogging and finishing section bars 279
Coiling gear, Fowler's . . . 523
Cold drawing 805
Collar bearing 506
—— ———, friction of . 558, 871
Colours for steel tempering . . 125
Columns, strength of long . . 457
———, strength of short . . 405
Combination, chemical and mechanical mixture 72
——— of Boyle's and Charles' laws 590
——— of crank effort diagrams . 676
——— of indicator diagrams . 623
Combined bending and compressive stress action 455
——— bending and tensile stress action 453
——— bending and torsional stress action 461, 859
——— bending moment and shearing force diagrams . . . 444
——— torsional and compressive stress action 463
Combustion and forced draught . 696
Commercial varieties of cast iron . 1
Comparative costs and speed of hand and machine riveting . 321
Comparison of agents . . . 480
——— of angular velocities . 863
——— of compressed air and hydraulics 548
——— of temperatures in adiabatic expansion. . . . 607
——— ratio 883
Compasses 185
Compensating cylinders or pots . 732
Compensating cylinders, indicator diagram showing effect of . . 732
——— cylinders, intensifier for 732
Complete pairs (kinematics) . . 485
Composition of blackening . . 6
——— of brass and gun metal . 84
——— of green, parting and dry sand; and of loam . . . 4

Digitized by Google

PAGE

Composition of Muntz metal . 85
——— of pig iron . . . 2
——— of puddled bar . . 76
——— of steel 77
——— of steel castings . . 82
Compound ideal indicator diagrams 666
——— locomotiue . . . 689
——— beam engine . . . 628
——— pumping engines, horizontal 681
——— wheel and axle . . 483
Compounding, theory of . 614, 886
Compressed air and hydraulics, comparison of 548
——— air, losses in cooling . 547
——— —, transmission of power by 545, 580
——— steel, Whitworth's . 82, 790
Compression and bending combined 455
——— and torsion combined . 463
———, cylinder for air . . 546
——— in stages . . . 881
——— of air, efficiency of . 880
——— on indicator diagram, effect of 618
Compressive stress action . . 404
——— stresses, nature of . . 366
Compressor, intensifying . 375, 836
——— quiet 374
Condensation and re-evaporation, initial 614
——— and re-evaporation, effect on indicator diagram of . . 618
——— water, quantity required 598
Condenser, casting and moulding a 27
———, ejector 688
——— evaporative . . . 896
———, jet 686
———, loam moulding of . 782
———, surface . . . 684, 686
———, Worthington . . 897
Conduction of heat . . 582, 876
Conductors, relative value of good and bad 583
Cone keys 504
—— pulley, casting and moulding a 27
——, speed 534
Conical flue, geometry of . . 340
Connecting rod, crank and, velocity ratio 490
——— rod end, machining the parts of a 243
——— rod, forging a . . . 135
Connecting rod, machining a . 240
——— ——, return . . . 630
Conservation of energy . . 477
——— of momentum . . . 474
Constant pressure and constant volume, specific heats of a gas at 603
——— volume lines . . . 891
Constants for pillars, Gordon's . 458
Construction of hyperbola . . 615
——— of wire rope . . . 539
Contact, arc of 512
Continuous beams and pressure on supports . . . 445, 762, 850
Contour of head of rivet . . 409
Contraction of castings . . 62
——— — ——, table of . . 63
——— of water through orifices, coefficient of . . . 712–13
Contrivances for diminishing friction 566
Convection 583
Conversion of thermometer scales . 585
Cooke's mine ventilator . . 498
Cooling compressed air, losses by . 547
——, heating and, stresses caused by 368
Cope 40
Copper, electro 793
———, roasting and smelting . 83
Copying lathe 812
——— machines 812
——— principle in machine tools . 139
Core boxes 30, 55
—— prints 55
Cores 4
——, balanced 57
——, drying of, and supports for . 39
—— for wheel arms . . . 61
——, hung 29
Corliss valve 657
—— —— gear 656
Cornish and Lancashire boilers . 330
——— double-beat valve . . 636
——— pumping engine . . 627
——— ——— ———, distribution of steam in 634
Correction for inertia, of indicator diagram 673
Corrugated flues 332
Cost of gas power . . . 915
Costs of hand and machine riveting, comparative . . . 321
Cotter, forging a pin and . . 106
—— joint, strength of . . . 415
Cotton rope, data connected with 537
—— —— gearing . . . 534
—— ——, mill driven by . . 538
—— ——, pullies for . . . 536

Digitized by Google

PAGE

Cotton rope, travelling crane driven by 538
Countershafting 534
Couple, a 417
Coupling bolts, strength of . . 422
Coupling, Oldham's flange . 504, 763
——, shaft . . . 502, 844
Cover, machining cylinder . . 260
Covering for boilers . . . 902
Cramp, D 205
Crane, efficiency of a . . . 573
——, Fairbairn's 456
—— hooks, strength of . . 453
—— jib, &c., stresses in . . 468
——, travelling . . . 538, 543
Cranes, hydraulic, *see* Hydraulic cranes.
Crank and connecting rod, velocity ratio 490
—— and eccentric, relation of . 637
—— chain, double slider . . 487
—— ——, slider 486
—— effort curves . . . 676
—— —— diagrams, combination of 676
——, forging a bent . . . 122
——, ——— a double webbed . 118
——, ——— a single webbed . 117
—— pin adjustment (automatic) in hydraulic engine . . . 744
—— shaft, forging a double throw 129
—— ——, ——— a small . . 118
—— —— bearing, machining a . 235
—— ——, machining a . . 238
Creep of belts 530
Crosshead, machining a . 245, 752
Crystallization of cast iron . . 67
Cubical blocks 185
——— moulds in loam . . 782
Culmann's funicular polygon. 445, 855
——— theorem . . . 446
Cupola, charging 2
———, tapping a. . . . 40
Curve, adiabatic, plotting . . 882
——, Fairbairn's expansion . . 607
—— of dry saturated steam . . 607
—— of inertia pressure . . 674
—— of saturation points . . 595
—— of sines 496
—— of velocity 490
——, Rankine's expansion . 607, 608
——, slope 851
——, sum 851
——, Zeuner's expansion . . 608
Curved floats, pressure of water on 719
Curves, acceleration . . 492, 863

PAGE

Curves and their areas, expansion 604, 606, 607
——, crank effort . . . 676
——, cycloidal 510
——, energy and velocity . . 860
—— of efficiency 955
—— of various mechanisms, velocity 492–8
——, polar 490
——, rolling of 867
Cut-off, automatic . . 654–6
——— valve, back . . . 652
Cutter, tube. 326
Cutters, milling 174
——, ——, machine for grinding 197
Cutting a screw in lathe . . 212
——— bevel teeth . . . 753
——— edge on twist drill, form of 197
——— keyways 754
——— screws 815
——— speeds 142
——— tools, action of . . . 140
——— ——, angles of. . . 141
——— wheel teeth . . . 821
Cycle, Carnot's reversible . 608, 887
—— of Ericsson 771
—— — operations . . . 608
—— — ——— in gas engine . 699
—— — Rankine 883
—— — Stirling 771
Cycles, reversible. . . 770, 883
Cycloidal curves, cycloid, epicycloid, hypocycloid . . . 510
Cylinder for air-compression and plant 546
——— clearance 616
——— cocks 264
———, compensating . . . 732
——— cover-bolts, strength of . 404
——— cover, casting and moulding 10
——— ——, machining . . 260
———, expansion in . . . 615
——— for hydraulic press . . 736
———, machining a steam . . 257
——— for testing machine, straining 376
Cylinders, strength of . . . 397
———, thick . . . 757, 841
Cylindrical gauges . . . 214

DAIMLER motor . . . 915
D cramp 205
D slide valve, long and short . 636
Davits, ships' 456
Dead-weight safety valve . . 693
Decision of working stress . . 393

Digitized by Google

PAGE
Deductions from indicator diagram 620
Defects in boilers . . . 899
Deflection of beams . . 450, 855
——— ———, table of allowable 451
——— of helical springs . 426, 845
Deforming a bar, work done in . 366
Delta metal 799
De Naeger boiler 832
Depth of chill 34
Density, definition of specific. . 594
Detaching hook 542
Details of governor . . . 252
——— of horizontal engine . 215, 267
Development of the dynamo. . 550
Deviations from normal diagram . 618
Diagonal paddle engine . . 630
Diagram factor 772
———, indicator, *see* Indicator diagram.
———, Culmann's . . . 855
———, Zeuner-Meyer . . . 895
———, Zeuner, *see* Zeuner diagram.
Diagrams, autographic test . . 384
———, combination of crank effort 676
———, reciprocal stress . . 464
———, stress strain . 362, 385, 837
———, —— ——, showing elastic line 388
Diameter of cylinder for given horse power 626
Die for slotted link, machining . 226
——, stamping 123
Dies, stocks and 192
Differential accumulator . . 738
——— pulley block (Moore's) . 525
——— —— —— (Weston's) . 203
Dimensioning drawings, method of 277
Diminishing friction by contrivances 566
——— ——— by lubrication . 561
Direct acting engine . . . 630
—— elasticity, modulus of . . 363
—— electric transmission . . 550
—— loaded safety valves . . 693
—— pattern hydraulic riveter . 316
Discharge of water through orifices 711
——— — —— ——— ———, coefficient of 712
——— of water through orifices, table of coefficients of . . 714
Distance bases (for vel. curves), time and 491
Distress of material . . . 288
Distribution of friction in machines 574
——— —— of power . . . 875
——— —— of shear stress . . 437
PAGE
Distribution of steam by slide valve 636
——— ——— in Cornish pumping engine 634
Dividing centre for milling machine 181
——— head for milling machine . 180
Dog chuck for lathe . . . 149
Dome plate, geometry of . . 340
Donkey pump velocity curve . 494
Double-acting engine with drop valves 634
Double and triple stage expansion, advantages of 621
—— beat valve, Cornish . . 636
—— driving for lathes . . . 749
—— eye, forging a . . . 106
—— geared drilling machine . 163
—— ported slide valve . . 654
—— riveted butt joint, strength of 410
—— —— lap joint, strength of . 408
—— shrouding 512
—— slider crank chain . . 487
—— throw crank shaft, forging a . 129
—— webbed crank, forging a . 118
Dowson gas 914
Drag 40
Draught, artificial . . . 907
———, forced 907
———, induced 908
Drawbacks 48
Drifts, key and square . . . 205
Drill chuck 153
——, tempering a . . . 126
——, twist: form of cutting edge, and grinder 197
Drilling in position . . . 306
Drilling machine, double geared . 163
—— ——, feed for . . . 163
—— —— for boiler flues . . 307
—— ——, multiple and portable 310
—— ——, radial . . 166, 303
—— ——, single geared . . 164
—— ——, slot 168
—— ——, special . . . 304
—— —— table, casting and moulding 10
—— ——, use of . . . 303
Drills, flat-pointed, pin, and twist 166
Driver, Clements' . . . 749
Driving fits 825
——— pull of belts . . . 529
——— work in lathe, method of . 152
Drop-testing machine . . . 834
Dry sand, composition and properties of 5
—— saturated steam . . 593, 594

Digitized by Google

PAGE
Drying of cores 39
Dryness fraction 594
——— of steam . . . 764, 878
Dunlop's marine governor . . 655
Duplex pumps 731
Du Temple boiler 832
Duty of engine 768
Dynamical theory of heat . . 581
Dynamo, development of the . 550
———, history of the . . . 549
Dynamometer, absorption or brake 575, 875
———, transmission . . 576

ECCENTRIC, angular advance of 637
——— chuck 155
———, relation of crank and . 637
———, reversing by loose . . 638
——— , ——— by shifting . 638
——— rods, crossed and open 651, 665
——— ———, machining main and expansion 226
——— sheaves, machining . 228, 751
——— ———, setting . . . 273
——— straps, machining . 228, 751
———, throw of 637
Economical sections . . . 433
Economiser 905
Eddies and shock, loss of energy by 716
Effective pressure per square inch from indicator diagram . . 620
Efficiencies at long distance . . 928
——— of various machines 577, 872
———, thermal . . . 966
Efficiency curves 955
———, engine and boiler . 767
——— ideal, of engine . . 769
——— mechanical, of engine . 770
——— of boiler . . . 939
——— of crane . . . 573
——— of electric transmission . 551
——— of engine, mechanical . 620
——— of engines . . . 934
——— of Fourneyron turbine . 724
——— of gas engines . . 946
——— of Girard turbine . . 726
——— of hydraulic cranes . 741
——— of machines . . . 571
——— of perfect heat engine 611, 769
——— of plate joints . 408, 413
——— of pullies . . . 873
——— of pumps . . . 734
——— of screw-jack . . 874
PAGE
Efficiency of steam . . . 602
——— of steam engine . . 943
——— of turbines, relative . 726
——— of water wheels, *see* Water wheels.
———, relative, of engine 769, 883
———, thermal, of engine 769, 883
———, total, of engine . . 770
Ejector condenser . . . 688
Elastic limit, primitive . . . 363
——— ———, raising of . . . 385
——— line, diagrams showing the 388
Elasticities, table of . . . 364
Elasticity, and limit of . . . 361
———, moduli of direct, transverse, and volumetric . . 363
———, transverse (or rigidity) . 363
Electric accumulators . . . 958
——— formulæ 552
——— ignition 963
——— ——— in gas engine . 700
——— ——— in oil engine . 707
——— pyrometer, Siemens' . 587
——— traction 961
——— transmission . . 549, 580
——— ——— by storage or direct 551
——— ———, efficiency of . 551
——— ———, examples of . 554
——— ——— notes . . 926
——— *v.* hydraulic transmission . 754
——— *v.* shafting transmission . 865
——— welding . . 327, 754, 827
Electro-copper 793
Elements, effect of, in cast iron . 789
———, tension and pressure . 489
Elliptic trammels . . 488, 763
Emery grinder 195
——— testing machine. . . 376
Energies, numerical estimate of various 477
Energy 473
——— and velocity curves . . 860
——— available 476
——— changes in a gas . . 879
———, conservation of . . 477
——— example 863
———, fluctuation of flywheel . 478
——— forms; potential and kinetic 475
———, head, pressure, and velocity 710
——— in one pound of water . 711
———, natural stores of . . 476
——— of revolution of a flywheel. 478
———, transformation of . . 477
Engine and boiler efficiency . . 767

Digitized by Google

PAGE

Engine, beam blowing, compound and rotative beam, and direct-acting pumping . . . 628
———, beam, generally . . 627
———, Brotherhood three-cylinder 631
———, Cornish pumping . . 627
———, diagonal paddle, direct acting, oscillating, Penn's trunk, side lever marine, steeple . 630
——— duty 768
——— efficiency 934
———, ——— of perfect . . 769
———, erecting an . . . 267
———, Fielding 633
———, gas, *see* Gas engine.
———, grasshopper . . . 499
———, horizontal compound pumping 681
——— hot air 915
——— H.P. 931
———, machining details of horizontal 215
———, hydraulic pressure . 742
———, inside cylinder. . . 689
———, list of details of . . 267
———, losses in a steam . . 613
———, Maudslay's and modern marine 631
———, mechanical efficiency of an 620
———, Newall 633
———, perfect heat . . . 608
———, ———, efficiency of . 611
———, petroleum or oil . . 705
———, refrigerating . . . 773
———, rotary; annular, and eccentric types . . . , 631
———, stationary . . . 681
———, Tower 633
———, triple expansion marine . 685
——— valves, double acting . 634
———, Westinghouse . . . 633
———, Willans' central-valve . 893
———, ——— side by side . . 631
Engines, high speed . . 631, 893
———, oil 915
———, outlines of various . 629
———, sections of high speed . 632
Entropy 886
Epicyclic trains of wheels . . 521
Epicycloid 510
Equation, solved graphically . 922
Equivalent of heat, mechanical . 599
——— twisting and bending moments 461
Erecting 183
——— an engine. 267
Erector's tools 202
Ericsson's engine 771
Estimate of various forms of energy, numerical. 477
Euler's formula for strength of long columns 456
Evaporation, total heat of . . 597
———, work done during . 600
Evaporative condenser . . . 896
Examination of plates . . . 280
Example of energy . . . 863
Exceptions to laws of friction . 556
Excessive clearance, effect upon indicator diagram of . . 618
Exhaust lap, negative . . . 772
——— ports of Worthington pump 731
Exhausting in Simplex gas engine, method of 705
Expander, tube 324
Expanding mandrel, Noble's . 155
Expansible mill 175
Expansion, comparison of temperatures in adiabatic . . . 607
———, advantages of single and multiple stage 621
——— caused by heat . . . 584
———, coefficients of linear . 369
——— curves and their areas 604, 606
——— eccentric rod, machining . 226
——— gear, automatic . . 654
——— in cylinder . . . 615
——— of dry saturated steam . 607
——— of gases 587
——— ———, laws of . 587, 589
——— of wet steam . . . 766
——— valve, machining . . 262
———, variable 650
———, ———, by automatic cut-off 656
———, ———, by linking up . 651
———, ———; Meyer's gear and valve 652
———, ———, *versus* throttling . 650
Experiments of Joule . . . 599
——— of Regnault . . 596
——— of Wöhler . . . 757
——— on friction. . . . 868
Explosions, boiler . . . 899
Exponent, adiabatic . . . 605
Extension in test specimens, local. 385
Extensometer 381
External work during evaporation 600
Extractor, ferrule 326
Eye bolt, forging an . . . 111

Digitized by Google

PAGE

FACE lathe . . . 159, 808
Face plate of lathe . . 149
Facing head . . . 161, 814
——— sand . . . 747, 779
Factor, diagram 772
———, liquefaction . . . 884
Factors of safety 391
Fairbairn crane 456
——— expansion curve . . 607
——— rule for furnace tube . 460
Fan, Sturtevant 90
Farcot governor, Head or . . 650
Fastenings for belts . . . 532
Feather keys 504
Feathering paddle . . . 500
Feed for drilling machine . . 163
——— — planing machine . . 170
——— — lathe, star . . . 160
——— heaters 905
Feeding gate 38
Feed-water analysis . . . 901
——— regulator . . . 918
Ferguson's paradox . . . 522
Ferro-chromium 747
——— manganese 747
Ferrule extractor 326
Fielding high speed engine . . 633
Field tube and boiler . . . 828
Files 189
Filing 209
Filter, marine 904
Finger piece 60
Finishing, allowance for . . 215
——— brass work . . . 264
——— section bars, cogging and 279, 280
Firebars 330
Fits, shrink 842
——— standard 825
Fitter's tools 186
Fitting 137, 183
Fittings for boiler . . . 693, 903
Fixed beams 848
——— hydraulic riveter, large . 313
Flame ignition in gas engine . 700
Flange bolts 843
——— couplings 502
Flanging presses 298
——— ———, Piedbœuf and Universal 300
Flank of tooth 514
Flat keys 504
Flat pointed drills . . . 166
——— surfaces in boilers, strength of 451
Flexible links 488

PAGE

Fluctuation of crank energy . . 679
——— of energy of a fly-wheel . 478
Fluid friction 715
——— ———, laws of . . . 557
Fluidity of molten iron . . 2
Fluids, definition of . . . 710
Fluxes 73
Fly-wheel required, calculation of weight of 679
———, casting and moulding . 25
———, core boxes for arms of . 27
———, energy of revolution of . 478
———, machining a . . 262
———, strength of rim of . 401
Foot pound 366
Footstep bearing 506
Force and mass 473
———, centrifugal, tensile stress caused by 400
——— closure, chain and . . 487
——— fits 825
——— pump, single and double acting 730
———, shearing, *see* Bending moment.
———, tractive, of a locomotive . 693
Forced draught . . . 698, 907
Forces, polyglon and triangle of . 464
———, work done by uniform and variable 366
Forge, the 129
Forging a bell-crank lever . . 118
——— a bent crank . . . 122
——— a bolt 102
——— a box key . . . 113
——— a connecting rod . . 135
——— a double and a single eye . 106
——— a double throw crank shaft 129
——— a double webbed crank . 118
——— a holdfast . . . 104
——— an eyebolt and hooks and harrow frame 111
——— a nut 104
——— a pair of tongs . . . 113
——— a pin and cotter . . 106
——— a piston rod . . . 134
——— a shackle and a spanner . 108
——— a single webbed crank . 117
——— a small crank shaft . . 118
——— by stamping . . . 122
——— ———, examples of . 125
——— by steam hammer . . 117
———, heating for . . . 100
——— machine 917
——— presses 804
———, smithing and . . . 88
——— solid *versus* welding . . 115
——— steel shafts . . . 133

Digitized by Google

PAGE

Form of water-wheel vane . . 719
Forms of load 361
Formula for long columns, Euler's 457
———, ————, Gordon's . 458
Formulæ, electric . . . 552
Founding, brass 747
———, gun metal . . . 747
Foundry, brass 37
——— floors, venting . . . 39
——— pits 25
Fourneyron turbine . . . 723
——— ———, efficiency of . 724
——— ———, path of water in . 723
Four-part box 781
Fowler's clip pulley . . . 540
——— coiling gear . . 523, 527
Fracture, appearance of . . 77
Framed structures, braced and . 463
——— ——— of three dimensions 471
Friction, angle of . . . 561
———, coefficient of, in tension elements 528
———, coefficients of static . . 555
——— diminished by contrivances 566
——— ——— by lubrication . 561
———, distribution in machine . 574
———, exceptions to laws of . 556
——— gearing . . . 571, 580
———, head lost by . . . 715
——— in pipes . . . 715, 965
———, laws of fluid . . 557, 715
———, ——— solid . . . 555
———, low speed . . . 869
——— of collar bearing 558, 871-2
——— of journal bearing . 557, 870
——— of pivots 872
———, static 868
———, uses of 569
———, work lost in . . . 558
Frictional loss, engines . . 962
Froude's experiments on water energy 711
Fuel, calorific value of . . . 906
——— calorimeter 906
———, liquid 907
Fulcra of testing machine, alternative 375
Fundamental Zeuner valve diagram 661
Funicular polygon . . . 445
Furnace, blast . . . 73, 788
———, ———, action in . . 74
———, cementation . . . 78
——— for forge 129
——— puddling 75
——— regenerative . . . 81
——— tubes, Board of Trade rule for 460

PAGE

Furnace tubes, Fairbairn's rule for 460
——— ——— for boilers . . 347
——— ———, strength of . . 460
Fusible plugs . . . 755, 833

GALLOWAY tubes . . 332
Gas engine, and cycle of operations in . . . 699, 911
Gas engine; flame, tube, and electric ignition in 700
Gas engine, Atkinson . . . 912
— ———, Beck's . . . 912
— ———, Clerk's . . . 911
— ———, Griffin . . . 912
— ———, Simplex . . . 701
— ——— trials 944
— engines, Lenoir and other . 699
— pipe main, casting and moulding 14
—, specific heats of a . . . 602
— used in gas engines, kind of 705, 914
Gases, expansion of . . . 587
———, ———— —, Gay Lussac's formula for 589
———, expansion of, laws of . 587, 589
Gates 6
———, position of 7
———, size of; skimming, feeding . 38
Gauge, pattern-maker's . . 45
——— notches for measuring H. P. of a stream 714
——— of split pins . . . 277
Gauges, cylindrical . . . 214
———, horseshoe . . . 750
———, pressure and vacuum, Bourdon's 694
Gay-Lussac's formula for expansion of gases 589
Gear, automatic expansion . . 654
———, Corliss valve . . . 657
———, Fowler's coiling . . 523, 527
———, Hackworth's, Marshall's, and Walschaert's valve . . 643
———, Joy's valve 642
——— for hydraulic crane, multiplying 742
———, pit head 542
———, Proell valve . . . 658
———, reversing by radial valve . 642
———, trip valve . . . 657, 658
——— for oscillating engine, valve . 644
Geared capstan 523
Gearing, belt . . . 526, 579
———, bevel . . . 519, 578
———, cotton rope . . 534, 579
———, friction . . . 571, 580
———, pitch chain . . 544, 579

Digitized by Google

PAGE

Gearing, screw . . . 520, 578
——, spur . . . 509, 578
——, stepped 518
——, tooth, safe velocity of . 518
——, train of 481
——, wire rope . . 539, 579
——, worm 520
Gears, reversing 638
Geometry of dome plate and conical flue 340
—— required by boiler maker . 339
Girard turbine, construction and regulation of 724
—— ——, efficiency of. . 726
—— ——, path of water in . 726
Girder. 427
——, stresses in a lattice . . 468
——, momental strength of plate 435
——, riveting a 356
——, stays for boiler . . 335, 348
——, stresses in a Warren . . 466
Girders, continuous . . . 850
Gooch's link motion . . . 640
Gordon's constants and formula for long columns 458
Governor-ball turning . . . 753
Governor for Priestman oil engine 708
—— —— for Simplex gas engine, pendulum 701
—— for water wheel sluice . 720
——, Head or Farcot . . 650
——, hunting of . . . 773
——, hydraulic . . . 685
——, isochronous . . . 773
——, Dunlop's marine . . 655
——, parabolic . . 650, 773
——, machining the various parts of a Porter . . . 249
——, shaft 655
——, simple or Watt . . 647
——, weighted or Porter . 648
Gradient, hydraulic . . . 716
Graphical calculus . . . 851
Graphic solution of centre of gravity 432
—— —— of moment of inertia and resistance . . . 430
Grasshopper beam engine . . 499
Gravity, methods of finding centre of 432, 845
Greenhill's formula for combined torsion and compression . . 463
Green sand, composition and properties of 4
—— sand moulding . . . 5
Grel valve for pulsometer . . 735
Grey cast iron 1
Gridiron valve 654
Griffin gas engine . . . 912
Grinder, emery 195
——, twist drill . . . 197
Grinding lathe centres . . . 807
—— machine for milling cutters 197
Grindstone 195
Grooving in boilers . . . 900
—— mill 175
Gudgeon, machining a . . . 238
Guide blades of turbines . 724, 726
Gun metal, composition of . . 84
—— —— founding . . . 747
Guns, built-up 841
——, wire 759
Gusset stays 330

HACK saw 209
Hackworth's valve gear . 643
Hammer, hand 187
——, lead 209
——, pneumatic . . . 949
——, steam . . . 97, 129
——, ——, force of blow of . 98
——, tilt 78
Hand and machine riveting, comparison of 321
—— hammer 187
—— riveting and caulking . . 286
—— wheel, casting and moulding a 8
Hanger, automatically adjustable . 504
—— bracket 504
Hardening milling cutters . . 749
—— saws 749
—— steel . . 128, 749, 803
Hardness testing 834
Harmonic motion, pure . . 496
Harrow frame, forging a . . 111
Harvey steel 797
Head, dividing, for milling machines 180
—— gear of pit 542
—— lost in friction . . . 715
—— of rivet, contour of . . 409
—— or Farcot governor . . 650
—— pressure and velocity energy . 710
——, turret, for lathe . . . 200
Headers for tubulous boilers . 339
Headstock of lathe . . . 144
Hearths, smith's 88
Heat and heat engines . . . 581
——, caloric or material theory of 581
——, conduction of . . 582, 876
——, dynamical theory of . . 581
—— engine, perfect . . . 608
—— ——, ——, efficiency of . 611

Digitized by Google

	PAGE
Heat, expansion caused by	584
——, latent, of steam	592
——, ——, of water	591
——, measurement of	584
——, mechanical equivalent of	599
——, quantity of	585
——, specific	585
——, ——, method of finding, and table of	586
——, specific, of gases	602
—— —— of superheated steam	604
—— of evaporation, total	597
—— supplied	879
——, transfer of	581
Heaters for feed	905
Heating and cooling, stress caused by	368
—— for forging	100
Helical springs, deflection of 426,	845
—— teeth	518
Hemispherical cup, pressure of water jet on	718
High speed engines 631,	893
—— —— ——, sections of	632
—— temperature and strength	839
Higher pairing	488
History of the dynamo	549
Hobbing a worm wheel	274
Hodgson's eccentric mandrel	751
Holders for lathe tools	157
Holdfast, forging a	104
Hollow keys	504
—— round shaft, moment of resistance of	419
—— shafts, strength of	921
Hook, detaching	542
——, forging a	111
Hooke's universal joint 504,	866
Hoop stress 399,	757
Horizontal boring machine	160
—— compound pumping engine	681
—— engine, fitting up	215
—— ——, details of	267
—— shear in beams	922
Horse power and work from theoretical indicator diagram	625
—— ——, brake	575
—— —— from indicator diagram	620
—— —— in terms of steam used	626
—— —— of stream, measurement of	714
—— —— transmitted by shafting	507
Horse-shoe gauges	750
Hot-air engines	915
Housing plane	45
Hung cores	29

	PAGE
Hunting of governor	773
Hydraulic accumulator	730
—— ——, differential	738
—— ——, intensifying	740
—— ——, use of	738
—— ——, work stored in an	738
—— balance for Ellington's lift	740
—— cranes, automatic cut-off in	741
—— cranes, efficiency of	741
—— ——, examples of	741
—— ——, fixed and moveable pulleys of	740
—— ——, mechanical advantage in	741
—— ——, multiplying gear for	741
—— ——, use of	740
—— ——, working valve of	742
—— forging	803
—— governor	685
—— gradient	716
—— impulse ram	729
—— jack	205
—— lift, Ellington's balanced	738
—— —, balance for	739
—— plate bender	298
—— press	735
—— ——, mechanical advantage of	736
—— ——, shape of cylinder for	736
—— pressure engine, automatic stroke adjustment in	744
—— pressure engine, Brotherhood-Hastie	742
—— pressure engine, sliding crank pin in	744
—— pressure engine, stroke adjusting cam for	745
—— pressure engines	742
—— pressure engines, relief valve for	742
—— pressure engines, reversing valve for	743
—— punching and shearing machine	291
—— riveter, direct pattern	316
—— ——, large fixed	313
—— ——, lever pattern	317
—— ——, portable	315
—— transmission of power 549,	580
Hydraulics and compressed air, comparison of	548
—— and hydraulic machines	710
Hydraulic *v.* electric transmission	754
Hydrometer	562
Hyperbola, construction of	615

Digitized by Google

PAGE
Hypocycloid 510
Hysteresis, mechanical . . 837

ICE water and steam, relative volumes and temperatures of 595
Ideal compound indicator diagrams; tandem 666
—— compound indicator diagrams; cranks at 90° . . . 669, 672
—— efficiency 769
Ignition, electric 963
——- of charge in gas engine . 700
——— — ——— in oil engine . 707
——— tubes in gas engine . . 773
I.H.P., coal burnt per . . . 768
———, steam used per . . 768
Impact 475
Impulse machines; water wheels . 720
——— ———; turbines . . 724
——— ram, hydraulic . . . 729
Impulsive load, stress caused by . 368
Inaccurate taper-turning . . 818
Inclination of mould . . . 14
Inclined plane 483
Incomplete pairs 485
Incrustation in boilers . . . 901
Independent chuck . . . 153
Indicated horse power, diameter of cylinder for given . . . 626
——— horse power from diagram 620
Indication of machining on drawings 215
Indicator diagram; correction for inertia of 673
——— diagram, deductions from 620
——— diagram; effect produced by bad indicator, compression, excessive clearance, late admission, late release, leaky piston, leaky slide valve, initial condensation, re-evaporation, and wire drawing 618
——— diagram for Simplex gas engine 705
——— diagram, horse power from 625
——— ———, theoretical 625, 772
——— ———, topography of . 618
——— diagrams, combination of 622
——— ———, ideal compound, *see* Ideal, &c.
——— errors 892
——— plugs 267
———, steam engine . . 616
———, Tabor 617
Induced draught 908
Inertia, correction of indicator diagram for 673
Inertia, moment of; for any section, found graphically . . . 431
——— pressure, curve of . . 674
Initial condensation and re-evaporation 614, 884
——— condensation and re-evaporation, effect on indicator diagram 618
——— stressing, thick cylinders . 758
Injection cock for jet condenser 686
Injector, automatic lifting . . 696
Injectors 69
Inside-cylinder engine . . . 689
Instantaneous centre . . . 490
——————— grip vice . . . 187
Intensifier for compensating cylinder 733
Intensifying accumulator . . 740
——————— compressor . . 836
Intermediate valve rod, machining 226
Internal or annular wheels . . 514
——— work during evaporation . 600
Involute teeth 517
Inward flow turbine . . . 726
Iron, cast, mixtures of . . . 41
——, ——, varieties of . . . 1
——, fluidity of molten . . 2
—— or steel, test for . . . 83
—— ore, properties of . . . 73
——, scrap, and uses . . . 41
——, steelifying 803
——, typical foundry . . . 789
——, wrought, *see* Wrought iron.
Isochronous governor . . . 773

JACKS; bottle, hydraulic, and with worm gear . . . 205
——, efficiency of . . . 874
Jet condenser 686
— pump 711
— of water, pressure of . . 719
Jib of crane, stresses in . . 468
Jigs 274, 821
Joint, cotter, strength of . . 415
——, Hooke's universal . . 504
Joints, riveted, *see* Riveted joints.
——, efficiency of plate . . 408
——, table of efficiencies of various 413
Jonval turbine 724
——— ———; guide blades, regulation, suction tube, and wheel vanes 724
——— turbine, path of water in . 726
Joule's equivalent . . 599, 930
—— experiments 599

Digitized by Google

PAGE

Journal bearing, friction of . 557, 870
———, shaft 506
Journals, formula for pressure on . 507
———, table of allowable pressures on 507
Joy's valve gear 642

KENNEDY'S testing machine 372
Key drift 205
Key, forging a box . . . 113
Keys; cone, hollow, sunk, flat, and feather 504
——, strength of 423
Keyways, slotting . . . 754
Kinematic chains . . . 486, 489
——— link 486
Kinematics of machines . . 485
———, velocity ratios in . . 489
Kinetic energy, forms of . . 476

LAG 837
Lagrafel D'Allest boiler . 832
Lancashire boilers . . . 330
——— ———, setting out . 354
——— ———, the brick setting 827
Lanchester self-starter . . . 913
Landore-Siemens' steel process . 82
Lap joints, *see* Riveted joints.
Lap of slide valve . . . 636
Large fixed hydraulic riveter. . 313
Late admission and late release, effect on indicator diagram of . 618
Latent heat of steam . . . 592
——- —— of water . . . 591
Lathe, arrangement of . . . 141
——, back gear of . . . 142
——, break, with treble gear 157, 159
——, capstan head . . . 200
——, centreing work in . 151, 749
——, change wheels of . . 147
——, copying 812
——, cutting screw in . . . 212
——, double-driving . . . 749
——, driving work in . . . 152
——, face 159, 808
——, face plate and dog chuck for 149
—— headstock 144
——, leading screw of . . 147
—— mandrel 142
—— saddle 147
——, screw-cutting . . . 141
—— slide rest 147
——, speeds of 143
——, supporting work in . . 150
——, surfacing by . . . 147
—— tool holders 157

PAGE

Lathe tools . . . 156, 750, 808
——, treble geared . . . 157
——, turret head 200
——, vertical turret . . . 814
——, wood turners' . . . 46
Lattice girder, stresses in a . . 468
Law, Boyle's, Charles', Marriott's 587
—— of thermodynamics, first . 600
——— ——— ———, second . 612
——, Regnault's 603
——, Willans' 892
——, Wöhler's . . . 390, 839
Laws, combination of Boyle's and Charles' 590
—— of fluid friction . . . 557
—— of friction, exceptions to . 556
—— of solid friction . . . 555
Lead hammer 209
Lead of valve 638
—— of eccentric 637
Leading screw of lathe . . . 147
Leakage in cylinder . . . 884
Leaky piston or slide valve, effect on indicator diagram of . . 618
Least bending moment . . 760
Le Chatelier pyrometer . . 876
Leeds link miller 752
Leg vice 186
Lencauchez gas 914
Lettering used in Part II. . . 358
Lever, the 481
——, bell crank, forging a . . 118
—— -crank chain . . . 763
—— chuck 153
—— -loaded safety valve . 481, 763
—— pattern hydraulic riveter . 317
Levers, Stanhope 496
Lift, hydraulic, *see* Hydraulic lift.
Lifting injector 696
——— or suction pump . . 730
Limit of elasticity . . . 361
—— — ———, primitive . . 363
—— — ———, raising the . 385
Limiting angle of resistance . . 560
——— stress, line of . . . 430
Limit system 826
Line of limiting stress . . . 430
——, pitch 510
Linear expansion, coefficients of . 369
Lining out 183
Link, kinematic 486
—— -milling apparatus . . 752
—— motion, Allan's . . . 642
—— ———, reversing by . . 640
—— —, Stephenson's and Gooch's 640

Digitized by Google

PAGE

Link motion, Zeuner diagram applied to 665
——, radius. 247
——, suspension, strength of a 405, 952
Linking up, variable expansion by 651
Links, rigid and flexible . . 488
Linkwork, relative velocities in . 494
——, use of . . . 496, 577
Liquefaction factor . . . 884
Liquid fuel 907
List of efficiencies . . . 577
Live-rollers 872, 928
Load, forms of 361
Loam boards 61
——, composition of . . . 4
——, cubical moulds in . . 782
—— moulding . . . 5, 14
—— ——; a condenser . 782
Local extension in test specimens . 385
Lock nut, 'Gripper' . . . 570
Locomotive, adhesion of . . 571
—— balancing . . . 898
—— boiler . . 335
——, compound, various parts of 689
——, setting out the boiler of a 352
——, tractive force of . 693
Locomotives, balancing . . 967
Logarithms, table of . . 529, 626
Long columns, strength of . . 457
Long-distance transmission . . 928
Long-D slide valve . . . 636
Longitudinal stays . . . 330
Loose eccentric, reversing by . 639
—— pieces 23
Loss of head by eddies and shock . 716
—— ——; coefficients for pipe bends 717
Losses in boiler 937
—— in cooling compressed air . 547
—— in gas engines . . . 945
—— in oil engines . . . 947
—— in steam engines . 613, 942
Loss in shafting 865
—— on return stroke . . . 918
Lower pairing 485
Low speed friction . . . 869
Low temperature and strength . 838
Lubricant testing machine . . 563
Lubricants 561
Lubrication 564
——, diminishing friction by 561
Lubricator, sight feed, fixing . 264
Lubricators 565

PAGE

MACHINE, angle-cutting . 290
Machine, band sawing . 294
——, definition of a . . 480
——, distribution of friction in a 574
——, drilling, *see* Drilling machine.
——, flanging . . 300
—— for cutting bevel teeth . 753
——, forging . . . 917
——, horizontal boring . . 160
——, milling, *see* Milling machine.
——, plate-bending . . 294
——, planing, *see* Planing machine.
——, punching, *see* Punching machine.
——, riveting, *see* Riveting machine.
—— riveting compared with hand riveting 321
——, shaping . . . 171
—— shop arrangement . . 501
——, slotting . . . 173
——, strength of the parts of a 361
——, testing, *see* Testing machine.
—— tools 137
—— ——, advantage of . 288
—— ——, reciprocating *versus* continuous 138
—— ——; uses and examples, of locomotive boiler shop . . 318
—— ——; uses and examples, of marine boiler shop . . 319
—— ——; uses and examples, in ship building. . . . 320
—— vice, Taylor's . . 182
——, welding . . . 917
Machines, centreing . . 152, 807
——, copying principle in . 139
——, drop testing . . . 834
——, efficiency of . . 571, 872
—— for moulding . . 787
——, kinematics of . . 485
——, screwing . . 817
——, simple 481
——, theory of . . . 480
Machining 137, 183
——, allowance for . 49, 215
—— brasses 752
——, indication of, on the drawing 215
—— various parts of an engine 215
Main slide valve, machining . . 262

Digitized by Google

PAGE

Malleable castings, anneaiing . 36
Mandrel, expanding . . . 155
——— for eccentrics . . . 751
——— of lathe 142
Manganese bronze . . 85, 801
——— steel 794
Manhole in boiler. . . . 332
Marine boiler, setting out a . . 342
——— boiler 332
——— engine, modern. . . 631
——— filter 904
——— governor, Dunlop's . . 655
Marking off 137, 183
——— tools 183
Marriotte's law 587
——— tubes 588
Marshall's valve gear . . . 643
Mass, force and 473
Material, distress of . . . 288
——— of plates . . . 279
——— of rivets. . . . 281
——— theory of heat . . 581
Materials, metallurgy and properties of 72
———, strength of . . . 361
Matter, three states of . . . 591
———, molecular theory of . . 581
Maudslay's engine . . . 631
Mean effective pressure per sq. nch from indicator diagram . . 620
Measurement of heat . . . 584
——— of stream horse power 714
Measuring, strain 381
Mechanical advantage . . . 954
——— ——— of hydraulic crane 741
——— ——— of hydraulic press. 736
——— ———, principle of 481
——— efficiency of engine 620, 770
——— equivalent of heat . 599
——— hysteresis . . . 837
——— mixture and chemical combination 72
——— powers . . . 480
——— stoking . . . 910
Melting points of metals . . 87
Members, redundant, of framed structures. 469
Metal, Muntz, composition of . 85
——— patterns 63
——— spinning 806
——— white, composition of . 85
Metallurgy and properties of materials 72
Metals, melting point of . . 87

PAGE

Meyer valve, double ported . . 654
——— ———, expansion . . 652
——— ———, Zeuner diagram applied to 664, 895
——— variable expansion gear . 652
Mill driven by cotton rope gearing 538
Milling cutter grinding machine . 197
——— cutters 174
——— ———, hardening . . 749
——— machine 174
——— ——— dividing centres . 181
——— ——— dividing head . 180
——— ———, profiling . . 180
——— ———, universal . . 179
——— ———, vertical . . 180
——— notes 811
——— radius link . . . 752
Mills 174
——, angle of tooth of. . . 177
——, 'backed off' . . . 175
——; expansible, grooving, spiral, and twin 176
——— for spur-wheel teeth . . 178
——, speed of 177
Mine ventilator, Cooke's . . 498
Missing quantity 884
Mitre wheels 520
Mixtures of iron 41
——— of steam and water . 598
Modern marine engine . . . 631
Moduli of elasticity; direct, transverse, and volumetric . . 363
Modulus of resilience . . . 833
——— — rupture . . . 436
——— — section . . . 430
Molecular theory of matter . . 581
Molten iron, fluidity of. . . 2
Moment, bending, *see* Bending moment.
——— of inertia. . . . 429
——— — ——— of any section found graphically . . 430, 845
——— of inertia, table of . . 429
——— of resistance, approximate method of finding . . . 433
——— of resistance, graphic solution of 430
——— of resistance of beams 428, 845
——— — ——— of hollow round shaft 419
——— of resistance of rectangular section shaft 421
——— of resistance of solid round shaft 417
——— of resistance of square shaft 419

Digitized by Google

PAGE
Moment, second 845
Momental strength of cast iron beam 434
——— strength of plate girder . 435
——— ——— of steel rail and wrought iron rolled beam . . 434
Momentum, conservation of . . 474
———, principle of, applied to wheel vanes 717
Moore's pulley block . . . 523
Mortice teeth 518
Motion, link, *see* Link motion.
———, parallel or straight line, *see* Parallel motion.
———, pure harmonic. . . . 496
Mottled cast iron 1
Mould, arrangement of. . . 46
———, inclination of . . . 14
Moulders' tools 40
Moulding 3
——— a bevel wheel . . 34
——— a three-legged pot . . 781
——— box 4
——— boxes, four part . . 781
———, casting and . . . 1
———, chill 35
——— in loam. . . . 5, 14
——— machines . . . 787
——— machine, Scott's . . 31
———, open sand . . . 5
———, plaster blocks for . . 782
———, plate 63
——— sand 779
——— steam cylinder in green-sand 784
——— wheels by machine . 31
Mudhole in boiler . . . 332
——— — ———, cover for . . 694
Multiple drilling machine . 310
——— punching machine . . 291
Multiplying gear for hydraulic cranes 743
Multitubular boilers . . . 335
Muntz metal, composition of . 85
Musgrave's friction clutch . . 569

NATURAL sines and cosines, table of 272
Natural stores of energy . . 476
Nature of shear 755
Negative exhaust-lap . . 772
Neutral axis of beams . . 427
——— ——— of long columns . 457
Newall high-speed engine . 633
Nickel steel 795
Niclausse boiler 830
Noble's expanding mandrel . . 155
Nominal H.P., engines and boilers 931
Normal at tooth contact . . 926
——— indicator diagram, and deviations from . . . 618
——— slide valve . . . 636
Normand boiler 832
N^th moment 845
Numerical estimate of various forms of energy 477
Nut, forging a 104

OBLIQUITY, angle of . . 512
Oil cup, machining . . 264
Oil engines, petroleum or, *see* Petroleum engines.
Oil-engine trials 947
Oils, viscosity of 562
Oldham's coupling . . 504, 763
Open eccentric rods . . . 665
——— hearth steel process . . 80
——— sand moulding . . . 5
Ore, calcining 788
———, copper 83
———, iron 73
Originating surface plates . 210, 815
Oriolle boiler 832
Oscillating engine. . . . 630
——— ———, valve gear . . 644
——— lever, velocity curve for . 492
Outlines of various engines . 629
Outward flow turbine . . 723
Overshot water wheel . . 720

PADDLE engine; diagonal and oscillating 630
——— feathering. . . . 500
Pairing, higher 488
———, lower 485
Pairs, high and low; sliding, turning, and screw; complete and incomplete 485
Palm stays 335
Parabolic governor . . 650, 773
Paradox, Ferguson's . . . 522
Parallel-crank chain . . . 763
Parallel flow turbine . . . 724
——— motion, straight line or . 498
——— ———, Peaucellier's . 499
——— ———, Scott-Russell's . 500
——— ———, Watt's. . . 499
——— ———, White's . . 510
——— rimer 209
——— vices 187
Parsons' steam turbine . . 894, 966

Digitized by Google

PAGE
Part II., synopsis of lettering used in 358
Parting sand, composition and properties of 4
Parts of a connecting rod end, machining the 243
—— of a machine, proportioning the 394
Path of water in centrifugal pump . 728
—— ——— in turbines . . 726
Pattern maker's tools 45
——— making; casting and design 43
——— ———, wood used for . 43
——— of a bevel pinion . . 60
——— of a chain barrel in loam . 65
——— of a pipe 51
——— of a pipe bend . . 53, 54
——— of a pulley . . . 51
——— of a spur wheel. . . 58
——— of a worm wheel . . 58
——— in mould, position of . 7
——— in the mould, rapping . 62
——— in loam, striking . . 14
Patterns, metal 63
———, plaster 781
Pelton water wheel . . . 722
Pendulum governor on Simplex gas engine 701
——— pump, velocity curve for 494
Penn's trunk engine . . . 630
Perfect heat engine . . . 608
——— ——— ———, efficiency of 611, 769
Petroleum, constitution and kinds of 705
——— engine, oil or . 705, 915
——— ———, cycle of . . 707
——— ———, Priestman's; construction and working . . 707
——— ———, Priestman's; governor, igniter, spray maker, starting apparatus, vaporiser . . 708
Phosphor bronze . . 85, 748
Piedbœuf flanging press. . . 300
Pillars and struts, Euler's formula for strength of . . . 457, 857
Pin and cotter, forging a . . 106
—— drill 166
Pinion, bevel, making pattern of a. 60
Pinions, rules for small . . . 512
Pins in shear, strength of . . 415
Pipe, making pattern of a . . 53
—— bend, casting and moulding . 17
—— ——, making pattern of a . 53
Pipes, friction in 965
——, strength of 397
Piston acceleration . . . 932
PAGE
Piston, leaky; effect on indicator, diagram of 618
—— —, machining . . . 247
——— pumps 730
——— rod, forging a . . . 134
——— —, machining . . . 247
——— peeds, table of. . . 681
Pit head gear 542
Pitch chain gearing . . 544, 579
—— circle, line, or surface . . 510
—— of cylinder cover bolts . . 402
—— of riveting . . . 407, 760
Pits for the foundry . . . 25
Pivot, anti-friction or Schiele's . 560
—— friction 872
Pivots 507
Plane, housing 45
——, inclined 483
Planing machine 169
——— ———, feed for . . 170
——— ———, plate edge . . 294
——— ———, quick return for . 169
——— ——— tool . . . 171
——— ——— tool box . . 170
Plaster block moulding . . 782
——— patterns 781
Plate bender, hydraulic. . . 298
—— bending rolls . . . 294
—— edge planing machine . . 294
—— girder, momental strength of. 435
—— moulding 63
——, screw 193
—— straightening rolls. . . 298
——, stringer 412
—— work, boiler making and . 279
——, wrist 658
Plater's tools 286
Plates, brands, qualities and sizes of iron and steel . . . 282
——, examination of . . . 280
——, material of 279
——, rapping 67
——, rolling of steel . . . 280
——, surface 191
——, ———, originating . . 210
——, table of sizes of rivets and . 407
Plugs, fusible . . . 755, 833
—— indicator 267
Plumb square 186
Plummer block, casting and moulding 31
Pneumatic caulking . . . 322
——— hammer . . . 949
Point of saturation . . 593, 594
——, yield 363
Points, curve of saturation . . 594
Poisson's ratio 364

Digitized by Google

PAGE
Polar curves 490
Polygon, Culmann's funicular 445, 855
——— of forces 464
Portable drilling machine . . 310
——— hydraulic riveter . . 315
Porter for forge 129
—— governor, weighted or . . 648
Position of gates 7
——— of pattern in mould . . 7
Potential energy, forms of . . 475
Pots or compensating cylinders . 732
Power 479
—— distribution 875
—— gas 914
—— transmission 473
——— ——— by compressed air 545, 580
—— transmitters 479
Powers, mechanical 480
Press, flanging 298
——, hydraulic, *see* Hydraulic press.
Pressure and velocity energy, head 710
——— curves 598
——— elements 489
——— engines, hydraulic . . 742
——— gauge 694
——— in rivetter 826
——— machines, turbines 723, 724, 726
——— per sq. inch, mean effective 620
——— of water jet on curved floats 719
——— — — — on fixed plate . 717
——— — — — on moving plate 718
——— — — — on moving hemispherical cup 718
——— of water jet on radial floats 719
——— of water jet on reaction wheel 718
——— of wind on roofs . . 953
——— on teeth of wheels . . 515
——— volume, and relative temperature of steam . . . 596
———, wind 471
Priestman oil engine, *see* Petroleum engine.
Prime movers 479
Primitive elastic limit . . . 363
Principal, riveting a roof . . 356
Principle of mechanical advantage. 481
——— of momentum, applied to pressure on wheel vanes . . 717
——— of virtual velocities. . 481
——— of work. 481
Prints, core 55
——, tail 56
Problems in belt driving . . 534
——— in Zeuner valve diagram 662
PAGE
Process of making steel, Landore-Siemens' 82
Process of making steel, open hearth 80
——— — ——— ———, Siemens-Martin's 80
Proell valve gear 658
Profiling milling machine . 180, 812
Projectiles, steel for . . . 799
Proof stress 833
Propeller, screw 688
———, ——, moulding a . . 25
———, ——, relative costs . 801
Proportioning of structures and machine parts by calculation . 394
Proportions of teeth . . . 514
Puddled bar. 76
Puddling furnace 75
——— wrought iron . . . 74
Pulley block, Moore's . . . 523
——— ———, Weston's . . . 203
———, brumbo 616
——— efficiency 873
———, Fowler's clip . . . 540
———, making pattern of a . . 51
Pulleys for belt driving. . . 534
——— for cotton rope driving . 536
——— for governor, machining . 249
——— for wire rope driving . 540
Pulsometer 735
——— efficiency 966
Pump, accumulator . . . 732
——, velocity curve for donkey . 494
—— efficiencies 734
——, force 730
——, jet 711
——, lifting 730
——, velocity curve for pendulum. 494
——, Worthington . . . 731
Pumping engine, Worthington high duty 732
Pumps, piston 730
Punching and shearing machines . 289
——— and shearing machines, hydraulic 291
Punching machine, multiple . . 291
Pure harmonic motion . . . 496
—— iron 73
Pyrometer, Le Chatelier's . . 876
———, Siemens' electric . . 587
———, Wilson's and Siemens' water 587
Pyrometers 585, 587

QUADRIC crank chain . 487, 763
Qualities of plates . . 282
Quality curve 878

Digitized by Google

PAGE

Quantity of condensation water required 598
——— of heat 585
Quick return by belting . . 534
——— ——— for planing machine. 169
——— ———, Whitworth . . 957
——— returns . . . 171, 173
——— running 885
Quiet compressor for testing machine 374

RADIAL drilling machine 166, 303
Radial floats of water wheel, pressure of water on . . . 719
——— teeth 510
——— valve gear, reversing by . 642
Radiation 582
Radiators, relative value of . . 582
Radius link 247
——— ——— milling . . . 752
——— vector 490
Rail, momental strength of steel . 434
Raising the elastic limit . . 385
Rankine's curve for expansion of steam 607, 608
——— cycle 883
Rapping patterns in the mould . 62
——— plates 67
Ratchet brace 203
Ratio of expansion . 615, 625, 772
——— of velocities of P and W in kinematics 489
Reaction wheel 723
——— ———, pressure of water jet on 718
Recess, arc of 512
Reciprocal stress diagrams . . 464
Reciprocating machine tools. . 138
Rectangular section shaft, moment of resistance of 421
Reducer for testing machine . . 377
Reducing valve 904
Redundant members 923
——— ——— in framed structures 469
Re-entrant angles. 67
Re-evaporation, initial condensation and 614
Refining wrought iron . . . 74
Refrigerating engine . . . 773
Regenerative furnace . . . 81
Regenerator 771
Regnault's experiments. . 596, 597
——— law 603
Regulation of turbines . . . 724
Regulator and connections, machining 216

PAGE

Regulator for feed water . . 918
Relation of crank and eccentric . 637
Relative efficiency of engine 769, 883
——— strengths of shafts . . 422
——— temperature, pressure, and volume of steam . . . 596
——— value of good and bad conductors 583
——— value of radiators . . 582
——— velocities in link work . 492
——— volume 593
——— ——— and temperature of ice water and steam . . . 595
Release, late; effect on indicator diagram of 618
Relief valves 686
Remelting cast iron, advantages, &c., of . . . 2, 42, 779
Repetition of stress . . . 757
Resilience, modulus of . . . 833
——— of a bar . . . 367
——— of beams . . . 451
——— of bolts . . . 834
——— per unit volume . . 833
Resistance, limiting angle of . 560
———, moment of, *see* Moment of resistance.
——— to water through orifices, coefficient of . . . 712
Retarded velocity . . . 474
Return connecting rod . . . 630
——— stroke, loss on . . . 918
Reversed cycle in heat engine 612, 770
Reversibility in Stirling engine . 771
Reversible cycle, Carnot's . . 608
——— cycles 883
——— planing tools . . 813
Reversing by link motion . . 640
——— by loose eccentric . . 638
——— by radial valve gear . 642
——— by shifting eccentric . 638
——— gear 638
——— valve for hydraulic engine 742
Reverted trains of wheels . . 523
Revolution of fly-wheel, energy of 478
Rigid links 488
Rigidity or transverse elasticity . 363
Rim of fly-wheel, strength of . 401
Rimers, parallel and taper . . 209
Risers 24
Rivet, contour of head of . . 409
Riveted butt joint, double . . 411
——— butt joint, treble . . 411
——— joints 920
——— lap joint, chain . . 409
——— — ———, double . . 408

Digitized by Google

PAGE

Riveted lap joint, single . . 407
Riveter, pressure in . . . 826
Riveting by hand and machine, comparison of 321
——— by hand, and caulking . 286
——— machine, direct pattern hydraulic 316
——— machine, large fixed hydraulic 313
——— machine, lever pattern . 317
——— ———, portable . . 315
——— pitch of 760
——— up a girder . . . 356
——— — a roof principal . . 356
——— — a ship . . . 356
——— — boilers . . 348, 353
Rivets, material of . . . 281
——— and plates, table of sizes of 407
Road wheel, casting and moulding 12
Roasting and melting copper . 83
Rods, eccentric; crossed, and open, 651, 665
Rolled beam, momental strength of wrought iron 434
Roller bearings 872
Rollers, anti-friction . . 489, 567
——— 'live' . . . 566, 928
Rolling a tooth 512
——— circle 510
——— curves 867
——— section bars . . . 279
——— steel plates and bars . 280
Rolls, plate-bending . . . 294
———, —— straightening . . 298
Roof principal, riveting a . 356
—— truss, stresses in a . 465, 470
Roofs, wind pressure on . . 953
Roots' blower 90
Rope gearing, cotton . . . 534
—— ———, wire . . 539, 579
Ropes, strength of . . . 397
Rotary engines: annular and eccentric types 631
Rule for steam cylinder, casting . 400
Rules for small pinions. . . 512
Rupture, modulus of . . . 436

SADDLE of lathe . . . 147
Safe velocity of toothed gearing 518
Safety, factors of 391
——— valves 693
——— ——, Board of Trade rules for 694
——— valves, dead weight . . 693
——— —— lever, loaded . 482, 763
——— —— spring, loaded . . 693

PAGE

Sand; composition and properties of green, dry, and parting 4, 5, 779
——, facing . . . 747, 789
—— moulding; green, dry, and open 5, 6
Saturated steam, dry . . 593, 594
——— ——, —; expansion curve of 607, 766
——— ——, specific volume . 766
——— ——, tables of . . 776
——— steam and other vapours, isothermals of 608
Saturation point . . . 593, 594
——— points, curve of . . 594
Saw, hack 209
Sawing machine, band . . . 294
Saws, hardening 749
Scale, acceleration . . . 492
Scales, conversion of thermometer 585
Scarf joint 102
Scott Russell's straight line motion 500
Scrap iron 41
Scrapers 189
Scraping 210
Screw-cutting classified . . 815
——— —— lathe . . . 141
——— —— ——, change wheels for 484
——— —— in lathe . . . 212
——— gearing . . . 520, 578
———, leading, of lathe . . 147
——— pairs 485
——— plate 193
——— propeller 688
——— ———, moulding a . 25
——— tap, tempering a . . 127
———, the 483
Screwed stays . . . 335, 350
Screwing machine . . . 817
——— stock, Whitworth's guide 195
——— tackle 191
Screws, long-pitched . . . 817
Scriber and scribing block . . 185
Scroll or universal chuck . . 153
Section bars, cogging and finishing 279
——— ——, rolling of . . 279
——— ——, rolls for . . . 798
———, modulus of . . . 417
Sections, economical . . . 433
——— of high speed engines . 632
Self-starter 913
Separator 877
Setting eccentrics. . . . 272
——— out a Lancashire boiler . 354
——— — a locomotive boiler . 352
——— — a marine boiler . . 342

Digitized by Google

PAGE

Setting out a vertical boiler . . 356
——— valves 273
Shackle, forging a . . . 108
Shackles for testing machine. . 378
——— for wire rope . . . 544
Shaft couplings . . . 502, 844
——, double-throw crank; forging a 129
—— governor, Westinghouse . 655
—— journals 506
—— ———, formula for . . 507
—— ———, table of pressures on 507
——, small crank; forging a . 118
——, strength of hollow round . 419
——, ——— of solid rectangular . 421
——, ——— of solid round . . 417
——, ——— of square. . . 419
Shafting, horse-power transmitted by 507
———, counter; use of . . 534
———, use of . . . 501, 578
——— *v.* electric transmission . 865
———, work lost in . . . 865
Shafts, moment of resistance of, *see* Moment of resistance.
———, forging steel . . . 133
———, strength of . . . 417
———, ——— —, by direct experiment 421
———, use of square . . . 508
Shaping machine 171
Shear, graphically . . . 853
—— in beams, horizontal . . 922
——, strength of pins and bolts in 415
—— stress 364, 755
—— —— action 405
—— ——, distribution of . . 437
Shearing and punching machine . 289
——— force 438
——— —— and bending moment combined 444
Shearing machine, hydraulic. . 291
Sheave, eccentric; machining . 228
Sheer legs, stresses in . . . 471
Shell of a boiler, riveting the . 334
Shifting eccentric, reversing by . 638
——— spanner 209
Ships' bending moments . . 854
—— davits 456
——, riveting up 348
Shock, loss of energy by eddies and 716
Short columns, strength of . . 405
—— D slide valve . . . 636
Shrink fits 842
Shrinking of castings, warping and 69
——— of wood . . . 43

PAGE

Shrouding of wheels; single and double 512
Side by side engine, Willan's . 631
Side-lever marine engine . . 630
Siemens' electric pyrometer . . 587
——— Martin's process for making steel. 80
Siemens', Landore-; process for making steel 82
Siemens' water pyrometer; Wilson's and 587
Sight-feed lubricator, fixing . . 264
Silicon 73
——— bronze 799
Silico-spiegel 747
Simple machines, the . . . 481
——— or Watt governor . . 647
——— roof truss, stresses in a . 465
Simplex gas engine . . . 701
———— —— ——, indicator diagram for 705
Simplex gas engine, method of exhausting 701
Simplex gas engine, pendulum governor for 701
Sines, curve of 496
Single, double, and triple stage expansion; advantages of . . 621
Single eye, forging a . . . 106
—— geared drilling machine . 164
—— riveted lap joint . . . 407
—— shrouding 512
—— webbed crank, forging a . 117
Sizes of plates and rivets . . 407
—— of steel plates, maximum . 282
Skimming gate 38
Sleeve for governor, machining . 253
Slide bar and connections, machining 232
Slide bar, pressure on . . . 448
—— blocks, machining . . 238
—— rest of lathe 147
—— valve, distribution of steam by 636
—— ——, double ported . . 654
—— ——, ——— ——, back cut off 654
—— ——, expansion . . . 262
—— ——, lap of. . . . 636
—— ——, lead of . . . 638
—— ——, leaky; effect on indicator diagram 618
—— ——, long D . . . 636
—— ——, main; machining . 262
—— ——, normal . . . 636
—— ——, short D . . . 636

Digitized by Google

PAGE

Slider-crank chain, double . . 487
—— ——— ——, single . . 486
Sliding pairs 485
Slip of belts. 530
Slope of beams 856
—— curve 851
——, virtual 716
Slot drilling machine . . 168, 810
Slotting keyways 754
——— machine 173
Small pinions, rules for. . . 512
Smelting copper, roasting and . 83
Smithing and forging . . . 88
Smith's blast 90
——— hearths 88
——— tools. 93
——— ——, boiler . . . 284
Smith, the 88
Softening a casting . . . 36
——— Harvey steel . . . 797
Solid forging *versus* welding . . 115
—— friction, laws of . . . 555
—— round shaft, strength of . 417
Spanner, forging a . . . 108
———, shifting 209
Special drilling machine . . 304
Specific heat 585
——— —— at constant pressure and constant volume. . . 603
——— ——, method of finding . 586
——— —— of superheated steam 604
——— heats of a gas . . . 602
——— —— of substances, table of 586
——— volume . . . 594, 766
——— ——— of steam . . 933
Specimens, test 837
Speed cones 534
——— of belts 530
——— of cutting tools . . . 142
——— of lathe 143
——— of mills 177
Spiegeleisen . . . 80, 790
Spindle for governor, machining . 252
Spindles, main and expansion valve; machining 224
Spinning metal 806
Spiral mill 176
Split pins, gauge of . . . 277
Spray maker for Priestman oil engine 708
Spring, weak indicator; effect on diagram of 618
Spring-loaded safety valve . . 693
Springs, helical; deflection of 426, 845
———, ———, strength of . 425
Sprues 38

PAGE

Spur gearing . . . 509, 578
—— wheel, making patterns of . 58
—— —— teeth, cutting . . 823
—— —— ——, mill for . . 178
Square centreing 150
——— drift 205
——— shaft, strength of . . 419
——— shafting, use of . . 508
Stage compression . . . 881
Stamping die 123
———, forging by . . . 122
———, ——— —, examples of 125, 802
Standard fits 825
Stanhope levers 496
Star feed for lathe . . . 160
Starting apparatus, Priestman oil engine 708
States of matter, three . . 591
Static friction, co-efficient of 555, 868
Stationary engine, example of . 681
Stay, girder . . . 335, 348
——, gusset; and longitudinal . 330
——, palm 335
——, screwed . . . 335, 350
——, tubes 351
Steam, adiabatic of saturated . 766
—— and water, mixtures of. . 598
—— calorimeter 878
—— cylinder, large; casting and moulding of 21
—— —— in greensand, moulding 784
—— ———, machining . . 257
—— cylinders, casting rule for . 400
—— distribution by slide valve . 636
—— dryness . . . 764, 878
——, dry saturated . . 593, 594
——, efficiency of . . . 602
—— engine indicator . . . 616
—— ——— ———, Tabor . . 616
—— ———, losses in the . . 613
—— hammer 97
—— ———, force of blow of the 98, 101, 801
—— ———, forging by . . 117
——, ice and water; relative temperatures and volumes of . . 595
—— jacketing 885
—— lap of slide valve . . . 638
——, latent heat of . . . 592
—— loop 903
——, missing 884
—— per I.H.P. 708
—— port area 681
——, saturated; specific volume . 766

Digitized by Google

PAGE

Steam, saturated; tables of . . 776
—— separator 877
——, superheated; specific heat of 604
—— trap 903
—— trials 940
—— turbine, Parsons' . . 894, 966
—— used, horse power in terms of 626
——, wet saturated . . 593, 594
——, — ——— expansion of . 766
Steel, basic 791
——, carbon in 793
—— castings . . 82, 42, 747
——, chrome 798
——, composition of . . . 77
—— hardening 803
——, manganese 794
——, nickel 795
—— or iron, test for . . . 83
—— plant, Bessemer . . . 79
—— ——, cementation . . 78
—— ——, Siemens Martin's . 80
—— plates and bars, rolling of . 280
—— rail, momental strength of . 434
—— shafts, forging . . . 133
—— temper 793
—— tempering . . . 83, 125
—— tungsten 799
——, Whitworth's compressed . 82
Steelifying iron 803
Steeple engine 630
Stephenson's link motion . . 640
Stepped gearing 518
Stern tube and stern bush . . 689
Sterro metal 799
Stirling's engine 771
Stock and dies 192
——, Whitworth's guide screwing 195
Stoking, mechanical . . . 910
Stone breaker 498
Stop valve, casting and moulding . 31
Stopping off 64
Storage, electric transmission by . 551
Stores of energy, natural . . 476
Straight line motion, *see* Parallel motion.
Straightening roll, plate . . 298
Strain, definition of . . . 361
—— diagrams, stress and . . 385
—— measuring 381
Straining cylinder of testing machine 376
Strap and connecting rod end; machining 243
——, eccentric; machining . . 228
Straps, brake 569
Stream horse-power, measurement of 714

PAGE

Strength and temperature . . 838
———, momental, *see* Momental strength.
——— of belts 529
——— — bolts . . . 402, 842
——— — chains. . . . 397
——— — cotter joint . . . 415
——— — coupling bolts . . 422
——— — crane hooks . . 454
——— — cylinder cover bolts . 403
——— — cylinders . . . 397
——— — flat surfaces in boilers . 451
——— — fly-wheel rim . . 401
——— — furnace tubes . . 460
——— — helical springs . . 425
——— — hollow shafts . . 921
——— — keys 423
——— — long columns . . 457
——— — machine parts . . 361
——— — materials . . . 361
——— — pillars and struts, Euler's formula for . . . 457
——— — pins and bolts in shear 415
——— — pipes 397
——— — riveted joints, *see* Riveted joint.
——— — ropes 397
——— — shafts, *see* Shafts.
——— — —— by direct experiment 421
——— — shear sections . . 415
——— — short columns . . 405
——— — structures . . . 361
——— — suspension link . 405, 952
——— — teeth 514
——— — thick cylinders . . 399
——— — wire rope . . 397, 539
Strengths of different shafts, relative 422
Stress 920
—— action, bending . . . 426
—— ———, classification of . 394
—— ———, combined, *see* Combined stress action.
—— action, compressive . . 404
—— ———, tensile . . . 395
—— ———, torsional. . . 417
—— ———, shear . . . 405
—— area, virtual . . 430, 431
—— caused by heating and cooling 368
—— ——— by impulsive load . 368
——, definition of; and kind of . 361
—— diagrams, reciprocal . . 464
——, hoop 757
——, line of limiting . . . 430

Digitized by Google

PAGE
Stress, proof 833
—— repetition 757
——, shear 755
——, ——; distribution of . . 437
—— strain diagrams . . 385, 837
—— —— ——, time effect . 756
——, tensile; by centrifugal force 400
——, working; decision of . . 393
Stresses, breaking . . . 392
——, ——, average . 394, 840
——, ——, table of . . 393
—— in jib of a crane . . 468
—— in sheer legs . . . 471
—— in simple roof truss . . 465
—— in suspension bridge chain 466
—— in Warren girder . . 466
—— in wire rope . . . 542
—— tensile and compressive, nature of 366
Stressing initial 758
Strickling, striking, sweeping, or loam boards 61
Striking a pattern in loam . . 14
Stringer plate or tie bar . . 412
Stroke adjustment in hydraulic engine 744
Structures, braced or framed. . 463
—— of three dimensions, framed 471
——, strength of . . . 361
Struts, Euler's formula for strength of 456, 857
Stud fixing 214
Sturtevant fan 90
Suction or lifting pump . . 730
—— tube for Jonval turbine . 724
Sulphur 73
Sum curve 851
Sun and planet wheels . . . 523
Sunk keys 504
Superheated steam, definition of . 594
—— ——, specific heat of 604
Superheating 885
Supporting work in lathe . . 150
Supports for cores . . . 39
Surface condenser . . . 686
—— —— for horizontal compound pumping engine . 684
——, pitch 510
—— plates . . . 183, 191
—— ——, originating . 210, 815
—— in boilers, strength of flat 451
Surfacing in lathe . . . 147
Suspension bridge chain, stress in. 466
—— link, strength of 405, 952

PAGE
TABOR steam engine indicator 617
Tackle, block and . . 482
——, screwing 191
Tail prints 56
Tap, screw; tempering a . . 127
Taper rimer 209
—— turning, incorrect . . 818
Tapping a cupola . . . 40
Taps, screw 192
Taylor's machine vice . . . 182
Teeth of wheels 510
—— —— ——, approach and recess 763
—— —— ——, backlash in . 514
—— —— ——, clearance of . 514
—— —— ——, cutting . . 821
—— —— ——, helical . . 518
—— —— ——, involute . . 517
—— —— ——, mortice . . 518
—— —— ——, names of parts of . 514
—— —— ——, normal at contact 926
—— —— ——, pressure on . . 515
—— —— ——, proportions of . 514
—— —— ——, radial . . . 510
—— —— ——, strength of . . 514
——, bevel, cutting of . . 753
Telo-dynamic transmission of power 539
Temperature 584
——, absolute zero of . . 589
—— and volume, relative, of ice, water, and steam . . 595
—— -entropy . . . 886
——, influence on strength . 838
—— pressure and volume, relative, of saturated steam . . 596
—— pressure and volume, curve of ditto 598
Tempering a chisel or drill . . 126
—— a screw tap . . . 127
—— colours . . . 83, 125
—— steel . . . 83, 125
Temper of steel 793
Templates and jigs . . . 274
Tensile stress action . . . 395
—— —— caused by centrif. force 400
—— stresses, nature of . . 366
—— elements 489
—— ——, coefficients of friction in 528
—— in belts, centrifugal . . 530
—— of belts . . . 527, 867
Test diagrams, automatic . . 384
—— for iron or steel . . . 83
—— requirements by Admiralty . 388
—— specimens 837

Digitized by Google

PAGE

Testing for hardness . . . 834
——— machine, cement . . 370
——— ———, drop . . . 834
——— ———, Emery . . 376
——— ———, Kennedy's . . 372
——— ———, lubricant . . 563
——— ———, shackles for . 378
——— ———, Thurston's torsion 378
——— ———, Werder . . 370
——— ———, Wicksteed's . 372
——— ———, ——— ; fulcra of. 375
——— machines 369
——— rails 834
Theorem, Culmann's . . . 446
Theoretical indicator diagram, calculation of work and horse power from 625, 772
Theories, bending . . . 437
Theory of beams 427
——— of compounding . . 614
——— of heat; caloric or material, dynamical 581
——— of machines . . . 480
Thermal efficiencies . . . 966
——— - efficiency of steam engine 769, 883
—— unit, British . . . 479, 585
Thermodynamics, first law of . 600
———, second law of . . 612
Thermometer scales, conversion of 585
Thermometers 584
Thick cylinders . . 399, 757, 841
Thomson's turbine, construction of 726
——— ———, efficiency of . 726
Thornycroft boiler . . . 832
Thread bottom, diameter and sectional area of bolt at . . . 402
Threads, Whitworth . . . 192
Three cylinder engine, Brotherhood's 631
—— states of matter . . . 591
Throttling *versus* variable expansion 650
Throw of eccentric . . . 637
Thrust-bearing . . . 506, 688
Thurston's torsional testing machine 378
Tie bar 412
Tilt hammer 78
Time and distance bases (veloc.) . 491
—— effect on stress-strain . . 756
Tin, zinc, &c. 84
Toggle joint, velocity curve of; and application of 498
Tongs, forging a pair of . . 113
Tool box for planing machine . 170
—— holders for lathe . . . 157
Tooling circular arcs . . . 819
Tools, boiler-maker's . . . 283

PAGE

Tools, boiler-smith's . . . 284
——, erector's 202
——, fitter's 186
——, lathe 156, 750
——, machine 137
——, ——— ; advantage of . . 288
——, marking off 183
——, moulder's 40
——, pattern-maker's . . . 45
——, planing machine . . . 171
——, plater's 286
——, reversible planing . . 813
——, smith's 93
Tooth; flank, addendum, &c., of . 514
——— gearing, safe velocity of . 518
———, rolling a 512
Topography of indicator diagram . 618
Torsion and bending combined 461, 859
——— and compression combined 463
———, angle of 424
Torsional stress action . . . 417
——— testing machine . . 378
Total efficiency of engine . . 770
—— head of water . . . 711
—— heat of steam . . . 597
Toughening cast iron . . . 3
Tower high-speed engine . . 633
Traction, electric . . . 961
Tractive force of locomotive . . 693
Tractrix 867
Train of gearing 481
Trains, epicyclic 521
———, reverted 523
Trammels 185
———, elliptic . . . 763
Transfer of heat 581
Transformation of energy . . 477
Transmission dynamometer . . 576
——— of power . . . 473
——— ———, advantages, &c., of various methods of. . 577
——— of power by belting, 526, 579
——— ——— by compressed air 545, 580
——— of power by cotton ropes 534, 579
——— of power by electricity 549, 580
——— of power by electricity direct or by storage . . . 551
——— of power by electricity, efficiency of 551
——— of power by electricity, examples of 554
——— of power by hydraulics, 549, 580

Digitized by Google

PAGE

Transmission of power by wire ropes, 539, 541, 579
———, telodynamic . . 539
Transmitters of power . . . 479
Transverse elasticity, modulus of . 363
Travelling crane driven by cotton rope gearing 538
—— —— crane driven by square shafting 509
———— crane driven by wire rope gearing 543
Treble geared lathe . . 157, 159
———— riveted butt joint . . 411
Trials, brake 556
—— of boilers 936
—— of gas engines . . . 944
—— of oil engines . . . 947
—— of steam engines . . . 940
Triangle of forces. . . . 464
Trip gear, Corliss . . . 657
—— ——, Proell . . . 658
Triple expansion marine engine . 685
Triple stage expansion, advantages of 621
Trunk engine, Penn's . . . 630
Truss, roof; with five cells . . 470
——, simple roof; stresses in a . 465
Tube beader and cutter . . 326
—— expander 324
—— ignition in gas engine . 700, 773
Tubes, boiler stay . . . 351
——, Field 828
——, furnace 347
——, ———; Fairbairn's, and Board of Trade rules for . . 460
——, Galloway 332
——, Marriotte's 588
Tubulous or water-tube boilers 337, 356
Tumbler bearing 509
Tungsten steel 799
Turbine, Fourneyron . . . 723
———, Girard 724
———, Jonval 724
———, reaction wheel . . . 723
———, steam, Parsons' . 894, 966
———, Thomson's . . . 726
Turbines 723
———, classification of . . 727
———, comparative efficiency of different 726
———, fundamental equation for . 728
———, path of water in . . 726
Turning balls 820
———— eccentric sheave . . 751
———— governor balls . . . 753
———— pairs 485
Turret-head lathe 200
———— —— ——, vertical . . 814
Twin mills 176
Twist drill 166
—— ——, form of cutting edge of 197
—— —— grinder. . . . 197
Typical foundry irons . . . 789

UNDERSHOT water wheel . 721
Uniform forces, work done by 366
Uniform strength, beams of . . 452
Universal chuck 153
———— flanging press . . 300
———— joint, Hooke's or . . 504
———— milling machine . . 179
Use of linkwork . . . 496, 577
—— of machine tools on locomotive boilers 318
—— of machine tools on marine boilers 319
—— of machine tools on ships . 320
—— of shafting . . . 501, 578
Uses of drilling machine . . 303
—— of friction 569

VACUUM gauge . . . 694
Value of good and bad conductors, relative . . . 583
Valve, back-cut-off . . . 652
———, ————; double ported 654
———, Corliss 656
———, Cornish double beat . 636
———— diagram, Zeuner's . . 660
———— ————, —— fundamental 661
———— diagrams, Zeuner's; problems in 663
———— gear, Corliss . . . 657
———— —— for high-duty Worthington engine . . . 732
———— gear for oscillating engine . 644
———— —— for Worthington pump 731
———— ——, Hackworth's . . 643
———— ——, Joy's . . . 642
———— ——, Marshall's . . 643
———— ——, Proell . . . 658
———— ——, radial; reversing by 642
———— ——, Walschaert's . . 643
———, grel 735
———, gridiron 654
———— guide bracket, machining . 228
———, Meyer expansion . . 652
———, ———— ———, double ported 654
———, reducing 904
———, reversing, for hydraulic engine 742
———— rod; machining . . 226

Digitized by Google

PAGE
Valve setting 273
———, slide, *see* Slide valve.
Valves, relief 686
———, safety . . . 693, 763
Vane, best form of water wheel . 719
Vaporiser for Priestman oil engine 708
Vapours, isothermals of, steam and other 608
Variable expansion . . . 650
——— ——— by automatic cut off 657
——— expansion by linking up . 651
——— ——— gear, Meyer . 652
——— ——— *versus* throttling 650
——— forces, work done by . 366
Vector, radius 490
Velocity 473
——— accelerated . . . 473
——— and energy curves . 860
———, angular, comparison of . 863
——— curves 490
——— energy, head pressure and 711
——— of water through orifices . 712
——— ratio 954
——— ratio of crank and connecting rod 490
——— ratio in Hooke's joint . 866
——— ratios in kinematics . 489
——— of toothed gearing, safe . 518
Velocities in linkwork, relative . 492
———, principle of virtual . 481
Vent holes for moulds . . . 6
Ventilated buckets for water wheels 720
Venting foundry floors . . . 39
Vertical boilers 337
——— milling machine . . 180
Vice, instantaneous grip . . 187
——, leg 186
——, machine, Taylor's . . 182
——, parallel 187
Virtual centre 490
——— slope. 716
——— stress area. . . . 430
——— velocities, principle of . 481
Viscosity of oils 562
Volume, constant; specific heat at 603
———, relative, of steam and water 593
———, ———, of ice, water, and steam; temperature and . . 595
———, relative temperature pressure and; of steam . . . 596
———, relative; temperature, &c., curves of 598
———, specific, of saturated steam 766
———, definition of specific . 594
Volumetric elasticity, modulus of . 363

PAGE
WAGON brake . . . 498
Wall box and wall bracket 504
Walschaert's valve gear . . 643
Warping and shrinking of castings 69
——— of wood 43
Warren girder, stresses in . 466, 467
Waste of fuel 098
Water and steam, mixtures of . 598
——— — ———, relative volumes and temperatures of ice . . 595
——— core, C.I. cylinders . . 760
——— discharge from orifices . 711
——— ——— —— ———, coefficients of 712
——— energy, Froude's experiments on 711
——— -finishing tool . . . 808
———, latent heat of . . . 591
——— pyrometer; Wilson's and Siemens' 581
———, total head of . . . 710
——— tube boilers . . . 828
——— wheel, breast . . . 727
——— ——, overshot . . 720
——— ——, Pelton . . . 722
——— —— sluice governor . 720
——— ——, undershot . . 721
——— —— vane, best form of . 719
——— ——, ventilated buckets for 720
——— ——, weight and impulse machines 720
——— —— with curved or radial vanes, pressure of water jet on . 719
Water-tube or tubulous boilers . 337
Watt governor, simple or . . 647
Watt's parallel motion . . . 499
Weak indicator spring, effect on diagram 618
Weight machines (water wheel) . 720
Weighted or Porter governor . 648
Welding by fire . . . 102, 748
——— by electricity . . 754, 827
——— ———, Benardos' process 327
——— ———, Thomson's process 327
——— machine 917
——— *versus* solid forging . . 115
Werder testing machine . . 370
——— high-speed engine . . 633
Westinghouse shaft governor . 655
Weston's clutch 569
——— pulley block . . . 203
Wet saturated steam . 593, 594, 766
Wheel and axle 481
—— —— ——, compound . . 483
—— moulding, bevel . . . 34

Digitized by Google

PAGE

Wheel moulding by machine . 31
—— teeth 510
—— ——, bevel 520
—— ——, cutting . . . 821
—— ——, spur; mill for . . 178
—— trains, epicyclic . . . 521
—— ——, reverted . . . 523
Wheels, internal or annular . . 514
——, mitre 520
—— of lathe, change . . . 147
——, sun and planet . . . 523
Wheel-vanes, turbine . . 724, 726
—— ——, water 719
Whirlpool chamber of centrifugal pump 728
White cast iron 1
—— metal 85
White's straight-line motion . . 510
——— transmission dynamometer 576
Whiton's chuck 152
Whitworth compressed steel . 82, 790
——— guide screwing stock . 195
——— quick-return . . . 957
——— quick return, velocity curve for 492
——— threads 192
Wicksteed's testing machine . . 372
Willans' central-valve engines . 893
——— line 892
——— side by side engine . . 631
Wilson's and Siemens' water pyrometer 587
Wind pressure 471
—— ——— on roofs . . . 953
Wire drawing, effect upon indicator diagram of 618
Wire guns 759
—— rope, construction and strength of 539
—— —— gearing . . 539, 579
—— —— ———, pulleys for . 540
—— ——, shackles for . . 544
—— ——, stresses in . . . 542
—— —— transmission, uses of . 541
Wöhler's experiments . . 757, 840
——— law . . . 390, 839
Wood for pattern making . . 43
Woods 787

PAGE

Wood used by engineers . . 87
——, warping and shrinking of . 43
Wood-turner's lathe . . . 46
Work and horse power from indicator diagram 625
—— done by uniform and variable forces 366
—— —— during evaporation . 600
—— —— in deforming a bar . 366
—— for lathe, centreing . . 151
—— lost in friction . . . 558
—— —— in shafting . . . 865
——, principle of . . . 481
—— stored in hydraulic accumulator 738
—— supported in lathe . . 150
Working fits . . . 277, 825
——— stress, decision of . . 393
——— valve for hydraulic lift . 742
Worm gear, jack with . . . 205
—— gearing 520
—— hob 823
—— teeth, cutting . . . 823
—— wheel, casting and moulding a 10
—— ———, hobbing a . . 274
—— ———, making pattern for . 58
Worthington condenser . . 897
———— high duty engine . 731
———— —— —— ——; valve gear 732
———— pump . . . 731
Wrist plate 658
Wrought iron, brands of . . 76
——— ——, carbon in . . 793
——— ——, casting of . . 87
——— ——, refining and puddling 74

YARROW boiler . . . 832
Yield point 363

ZERO, absolute, of temperature 589
Zeuner diagrams applied to link motion 665
Zeuner diagrams applied to Meyer valve 664, 895
——— expansion curve . . 608
——— valve diagrams, *see* Valve diagrams

Digitized by Google

Digitized by Google

CHAPMAN & HALL'S
SCIENCE PUBLICATIONS.

ELECTRICAL ENGINEERING TESTING.

A PRACTICAL WORK FOR SECOND AND THIRD YEAR STUDENTS, ENGINEERS, AND OTHERS.

BY G. D. ASPINALL PARR, M.INST.E.E.; A.M.I.MECH.E.,

ASSOCIATE OF THE CENTRAL TECHNICAL COLLEGE, CITY AND GUILDS OF LONDON, HEAD OF THE ELECTRICAL ENGINEERING DEPARTMENT, YORKSHIRE COLLEGE, VICTORIA UNIVERSITY.

218 Diagrams of Connections and Illustrations of Appliances; 31 Tables of useful Figures, Constants, Logarithms, Squares, &c. Prelim. viii.; Text, 474 pages. Price 9*s.* net. This work is intended to form a systematic course of instruction in the very extensive field of testing connected with pure Electrical Engineering. It is believed that, so far, no extensive attempt has been made previously to treat the more advanced and practical portions of the subject in that systematic manner which it requires.

INTERMEDIATE PRACTICAL PHYSICS. A Manual for the Use of Intermediate and Preliminary Scientific Students. By JOHN B. WILKINSON, Assistant Master at Brighton Grammar School. In writing this little work the Author has endeavoured to include in it all experiments which are likely to be set at the Intermediate and Preliminary Scientific Examinations of the London University. A list of those most generally asked for appears in the University Guides, and nearly all of these are included in this volume. Numerous diagrams are given to illustrate the experiments on Light, rendering them more easy to understand. The experiments are arranged under their respective heads. The book will be found a valuable adjunct to the laboratory, and should render the ordinary book-work part of the subject easier and more intelligible. 2*s.* 6*d.*

STEAM BOILER ECONOMY. A Treatise on the Theory and Practice of Fuel Economy in the Operation of Steam Boilers. By WILLIAM KENT, A.M., M.E., author of *The Mechanical Engineer's Pocket Book*. 8vo. xiv+458 pp. 126 figures, 17*s.* net.

A MANUAL OF LABORATORY PHYSICS. By H. M. TORY, M.A., and F. H. PITCHER, M.Sc. Crown 8vo. ix+288 pp. 65 figures, 8*s.* 6*d.* net.

PUBLIC WATER SUPPLIES. Requirements, Resources, and the Construction of Works. By Professors F. E. TURNEAURE, C.E., and H. L. RUSSELL, Ph.D. With a Chapter on Pumping Machinery by D. W. MEAD, C.E., M.Am.Soc.C.E., &c. 8vo. xiv+746 pp. 231 figures, 21*s.*

WATER-POWER. An Outline of the Development and Application of the Energy of Flowing Water. By JOSEPH P. FRIZELL, Hydraulic Engineer. 8vo. 570 pp. 233 figures, 21*s.* net.

RESERVOIRS FOR IRRIGATION, WATER-POWER, AND DOMESTIC WATER-SUPPLY. With an Account of various types of Dams and the Methods and Plans of their Construction. By JAMES DIX SCHUYLER. Royal 8vo. 432 pp. 183 figures, 25 plates, 21*s.* net.

ELEVATION AND STADIA TABLES. For obtaining Differences of Altitude for All Angles and Distances; Horizontal Distances in Stadia Work, &c., with all necessary Corrections, &c. By ARTHUR P. DAVIS. 8vo. 4*s.* 6*d.* net.

SPECIFICATIONS FOR STEEL BRIDGES. By J. A. L. WADDELL, C.E., B.A.Sc., Ma.E. 12mo. 188 pp. 5*s.* 6*d.* net.

A MANUAL OF ASSAYING: The Fire Assay of Gold, Silver, and Lead, including Amalgamation and Chlorination Tests. By Prof. ALFRED STANLEY MILLER. 16mo. iv+91 pp. 38 figures, 4*s.* 6*d.* net.

CHAPMAN & HALL, LTD., LONDON.

Digitized by Google

CHAPMAN & HALL'S
SCIENCE PUBLICATIONS.

WATER FILTRATION WORKS. By JAMES H. FUERTES. 12mo. xviii+283 pp. 45 figures and 19 half-tone plates, 10*s.* 6*d.* net.

TOWERS AND TANKS FOR WATER-WORKS. The Theory and Practice of their Design and Construction. By J. N. HAZLEHURST. 8vo. ix+216 pp. 10*s.* 6*d.* net.

HIGH TEMPERATURE MEASUREMENTS. By Professeur H. LE CHATELEUR and O. BOUDOUARD. Tranlated by GEORGE K. BURGESS. 12mo xi+230 pp. 52 figures, 12*s.* 6*d.* net.

SMOKELESS POWDER, NITRO-CELLULOSE, and THEORY OF THE CELLULOSE MOLECULE. By Lieut. JOHN B. BERNADOU. 12mo. viii+200 pp. 11 figures, 10*s.* 6*d* net.

NOTES ON THERMODYNAMICS. By H. W. SPANGLER. Part I. Second Edition. iii+69 pp. 24 figures, 4*s.* 6*d.* net.

MECHANICAL DRAWING. By Lieut.-Commander F. W. BARTLETT. 8vo. viii+188 pp. 132 figures, 12*s.* 6*d.* net.

THEORETICAL MECHANICS. An Elementary Treatise. By Pro- W. W. JOHNSON. 12mo. xv+434 pp. 115 figures, 12*s.* 6*d.* net.

THE NEW EDUCATION (WOODWORK). A new work of Manual Training by RICHARD WAKE, Instructor to the Hull School Board. With 260 Illustrations. Written to meet tne requirements of the Education Department. Demy 8vo. 10*s.* net. In 3 parts, 3*s.* 6*d.* net each.

PHYSICS. EXPERIMENTAL AND THEORETICAL. By R. H. JUDE, D.Sc., M.A., Lecturer in Physics, Rutherford College, Newcastle-on-Tyne. And partly from the French of H. Gossin. Demy 8vo. 927 pp. 12*s.* 6*d.* net, or in 3 Parts, viz.:—

PART I.—MECHANICS, HYDROSTATICS, AND PNEUMATICS, 3*s.* 6*d.* net.
PART II.—HEAT, 7*s.* 6*d.* net. PART III.—ACOUSTICS, 2*s.* 6*d.* net.

MEASUREMENT AND WEIGHING. A First Year's Course in Elementary Practical Physics. By E. EDSER, Associate of the Royal College of Science, London. Crown 8vo. 2*s.* 6*d.*

NOTES ON CARPENTRY AND JOINERY. By T. J. EVANS. Adapted to meet the requirements of the City and Guilds of London Institute, the Worshipful Company of Carpenters, and the County Council's Scholarship Examinations. With over 300 Illustrations. Demy 8vo. 7*s.* 6*d.*

FIRST PRINCIPLES OF MECHANICAL AND ENGINEERING DRAWING. By H. HOLT BUTTERFILL. With upwards of 350 Diagrams. Demy 8vo. 7*s.* 6*d.*

A TREATISE ON PRACTICAL PLANE AND SOLID GEOMETRY. By EVANS & PULLEN. Containing Solutions to the Honours Questions for ten years, with over 200 Drawings. Demy 8vo. 9*s.*

PRACTICAL METALLURGY. By A. R. Gower. With Illustrations. Crown 8vo. 1*s.* net.

ARCHITECTURE FOR GENERAL READERS. By H. HEATHCOTE STATHAM. With Hundreds of Illustrations. 8vo. 12*s.*

MODERN ARCHITECTURE. By H. H. STATHAM. A Book for Architects and the Public. With numerous Illustrations of Contemporary Buildings. Demy 8vo. 10*s.* 6*d.*

CHAPMAN & HALL, LTD., LONDON.

Digitized by Google

Digitized by Google

Digitized by Google

Digitized by Google

Digitized by Google